UNIVERSITY OF MANITOBA

MECH 4860: Final Design Report

Articulating Jig for Railside Bungalow Roofs

Project Sponsor: Modern Manufacturing Limited

Project Advisor: Professor William C.D. DeGagne, P.Eng, M.B.A, Ph.D Candidate

Submitted by Group 19

Aoyu Wang

Evan Burnham

Kyle Logan

Stephen Duynisveld

Date Submitted: December 6th, 2017

Submitted to: Dr. Paul Labossiere

Executive Summary

The sponsor of this project is Modern Manufacturing Limited (MML). MML builds aluminum bungalows that house railway controls and components. The current process that MML uses to assemble and install the roof assemblies of these bungalows has shown to be inefficient and not as ergonomically friendly as they desire. Our team set out to design a new system for assembling and installing these roof assemblies that will not only be easier for the assemblers, but will also improve the safety and comfort.

The previous process has the roof assemblies being assembled on stationary stands, requiring the assembler to move around the assembly to gain access to welding points. The previous process also required three to four additional assemblers to assist with the installation of the roof on top of the bungalow assembly, which was done using an existing bridge crane. Our improved design includes a new assembly jig for the roof to facilitate fabrication. This jig has the ability to locate and hold the components required for the roof assembly, and allows for the assemblers to rotate the entire assembly for access where required. Also included in our design is a new jib crane that uses a horizontal trolley to move the entire jig assembly towards and away from the bungalow assembly. The horizontal trolley uses a vertical hoist that is attached to the roof jig to move it vertically and into position for installation on the bungalow. Also attached to the horizontal trolley is a vertical stabilization beam. This vertical stabilization beam uses a vertical trolley to attach the horizontal trolley to the jig assembly. This way when the jig assembly is being moved in the vertical direction it will not sway or rotate, as it would if it were only being lifted by the hoist.

The final design uses a W18 X 50 I-beam on the main jib crane to which our horizontal trolley is attached. The horizontal trolley uses a W8 X 21 I-beam, as its vertical stabilization beam, and a 6,600 lb capacity hoist to lift the roof jig and roof assembly. The final jig design uses metal “ribs” for locating the roof trusses, and rotates about a shaft using a latch and sprocket mechanism for rotation control. The total material cost of our improved design is $53,364.47.

Table of Contents

List of Figures iv

List of Tables v

1. Problem Description 1

1.1 Background and Problem Statement 1

1.2 Project Objectives 2

1.3 Constraints and Limitations 3

1.4 Target Specifications 4

2. Concept Generation 5

2.1 Methodology 6

2.2 Preliminary Concepts 6

2.3 Jig Concepts 11

2.4 Final Concept 13

3. Detailed Design 16

3.1 Methodology 16

3.2 Jig Design 16

3.2.1. Assumptions 17

3.2.2. Features 17

3.2.3. Analysis 22

3.3 Fork Design and Jig Rotation 25

3.3.1. Fork 25

3.3.2. Rotation of jig 28

3.4 Vertical Stabilization 35

3.4.1. Horizontal Trolley 35
3.4.2. Guide Column 38
3.5 Jib Crane Design 43
3.5.1. Horizontal Beam 45
3.5.2. Jib Rotation 47
3.5.3. Mast Column 51
4. Final Design 53
4.1 Overview 53
4.2 Cost 57
4.3 Operation 57
4.4 Recommendations 58
5. Conclusion 60
Bibliography 62
Appendix A – Supplemental Metric Information 64
Appendix B – Descriptions of Generated Concepts 69
Appendix C – Concept Screening and Scoring Results 91
Appendix D – Detailed Analysis 112
Appendix E – Detailed Cost Analysis 159
Appendix F – Bill of Materials 170
Appendix G – Preliminary Engineering Drawings 177

List of Figures

Figure 1. Modern Manufacturing bungalow. 1

Figure 2. "Boom Lift" Design 8

Figure 3. "Robotic Arm" Design 9

Figure 4. "Jib Hoist" Design 10

Figure 5. "Roller Coaster" Design 11

Figure 6. Concept for locating elements in jig assembly. 12

Figure 7. Details of floating end of jig. 13

Figure 8. Linear weight lifting guide. 14

Figure 9. Final concept sketch. 15

Figure 10. Jig Assembly Model. 19

Figure 11. Truss locator with toggle clamp. 20

Figure 12. Jig lifting lug. 21

Figure 13. Exploded view of jig lifting lug connection to roof lifting lug. 21

Figure 14. Jig lifting lug and truss locator assembly locations. 22

Figure 15. Divided sections of the fork. 26

Figure 16. Overall layout of rotation device for the jig and roof. 28

Figure 17. Three-stage stepped shaft. 29

Figure 18. Bearings and bearing base. 31

Figure 19. Hand wheel and Hand wheel lock. 33

Figure 20. Final Rendering of the Horizontal Trolley. 38

Figure 21. Guide Column Assembly. 41

Figure 22. Vertical Trolley 42

Figure 23. Vertical Stabilization Render. 43
Figure 24. Jib crane assembly. 45
Figure 25. Horizontal beam assembly. 46
Figure 26. Jib rotation device 47
Figure 27. Exploded view of jib crane assembly. 48
Figure 28. Stiffeners on jib crane rotation shaft. 49
Figure 29. Mast column assembly. 52
Figure 30. Mast column collision. 53
Figure 31. Jig in assembly position. 54
Figure 32. Final roof installation with bridge crane. 55
Figure 33. 90° rotation of jib crane. 55
Figure 34.Suggested anchor positions. 60

List of Tables

TABLE I CLIENT DELIVERABLES 2
TABLE II CLIENT NEEDS 4
TABLE III LIST OF METRICS AND TECHNICAL SPECIFICATIONS 5
TABLE IV CONCEPTS GENERATED FOR EACH SECTION 7
TABLE V ANALYSIS OVERVIEW 23
TABLE VI MATERIAL PROPERTIES 25
TABLE VII FINAL DESIGN PARAMETER SELECTION FOR FORK 27
TABLE VIII FORK ANALYSIS RESULT 27
TABLE IX FINAL DESIGN PARAMETER SELECTION FOR SHAFT 29
TABLE X SHAFT ANALYSIS RESULT 30

TABLE XI FINAL DESIGN PARAMETER SELECTION FOR BEARINGS AND BEARING BASES 31

TABLE XII BEARING BASES ANALYSIS RESULT 32

TABLE XIII FINAL DEISGN PARAMETER SELECTION FOR HAND WHEEL AND HAND WHEEL LOCK DEVICE 34

TABLE XIV HAND WHEEL LOCK DEVICE ANALYSIS RESULT 34

TABLE XV FINAL DESIGN PARAMETERS FOR THE HORIZONTAL TROLLEY 36

TABLE XVI HORIZONTAL TROLLEY ANALYSIS RESULTS 37

TABLE XVII FINAL DESIGN PARAMETERS FOR THE GUIDE COLUMN 40

TABLE XVIII VERTICAL COLUMN ANALYSIS RESULTS 40

TABLE XIX JIB CRANE FORCE FACTORS AND ALLOWABLE STRESSES 44

TABLE XX JIB CRANE ROTATION SHAFT STRESSES 49

TABLE XXI FINAL TECHNICAL SPECIFICATIONS OF DESIGN 56

TABLE XXII COST SUMMARY 57

1. Problem Description

Our team has been asked to design an articulating jig system that will assist with manufacturing aluminum roof assemblies, as well as installing those assemblies on their housings. This document outlines the methods used to reach a conceptual design that satisfies our clients' needs and requirements.

1.1 Background and Problem Statement

The sponsor for this project is Modern Manufacturing Limited (MML), a North American based custom manufacturer of railway components. MML is known for its high precision metal fabrication, specifically with aluminum, stainless steel, and other high strength metals [1]. Components fabricated at MML are commonly found at railway crossings. These components include signal masts and bridges, light-emitting-diode (LED) lighting configurations, electronic component housings, and aluminum bungalows (see figure 1 below) for housing railway related controls. Our project focuses on the bungalows, specifically their roof assemblies.

Figure 1. Modern Manufacturing bungalow [1].

These bungalows are available in several configurations. The smallest standard configuration has a 4’x6’ roof while the largest current standard roof is 8’x16’. Bungalow heights vary from 8’ to 10’ at the highest peak.

The bungalow roofs are currently manufactured in MML's factory using a process that has proven to be inefficient. The current process takes one person approximately one day to complete one roof assembly in a manner that is not ergonomically friendly. Workers are required to position themselves below the roof, while it rests on stands, and weld overhead. This results in workers being uncomfortable while performing work. Once completed, the roof assembly requires three to four people to assist in repositioning the assembly as it is placed on the bungalow. Because additional resources are required to place the roof assembly on top of the bungalow, these workers are stopping their work to assist with this task throughout the day.

1.2 Project Objectives

To ensure the success of the project, the design team's objective is to provide the client a number of specific deliverables. This section will outline the project deliverables and scope.

Project deliverables are the items that must be provided to Modern Manufacturing before their deadlines for the project to be a success. These deliverables are listed in the table below.

TABLE I CLIENT DELIVERABLES

Client Deliverable
Full Jig System Design
Preliminary Engineering Drawings
Preliminary CAD Files
Simulated Model

The objectives of this project are to design an articulating jig that makes the process of assembling bungalow roofs more efficient while improving the safety of the roof assembler(s) when compared to the existing process. The jig must be able to hold all of the roof components during assembly, and must be able to move the completed roof assembly into place on top of the bungalow. The process must allow for roof assemblies to be built by one person, with an additional person to assist with moving the roof into place. Our only exclusion from the design is

how the jig will be anchored to the floor, as our contact at MML has stated that they will perform the anchoring.

1.3 Constraints and Limitations

There are six constraints and limitations that affected this project.

Budget: Modern Manufacturing has provided a $10,000 budget. This budget accounts for the cost of materials construct the design.

Time: There was just short of three months to complete this project. The team scheduled and divided tasks appropriately to finish the project in the limited amount of time available. Also, the client requested a simulated model of the articulating jig. Consequently, sufficient time to make a simulated model was accounted for.

Operational Manpower: Currently, one operator takes one day to weld a roof assembly. It then takes three to four people to lift, rotate and move the assembly into position. The final design was constrained to allow one person to move the roof while it is in the jig. The final design was also constrained to only require two people to move the completed roof into position.

Safety: All material used in the final design were to be safe to weld. An example of a material that is not safe to weld is galvanized steel. The client stated that aluminum or carbon steel was be preferable. However, any alternative weld-safe material that is cost effective could have been entertained as a viable option.

Space: Our design needed to fit within the work area and was not to impede other normal operational activities when the jig was not in use. The specific dimensions constraining the design can be seen in section 1.4.

Design Constraints: The designed jig needed to accommodate multiple sizes of bungalow roofs and have a capacity of 1,000 lbs. Incremental movements of the jig were to be no more than +/− 10 cm. The jig was also to include locating elements for all components necessary for assembly roof assembly. The jig needed to be comfortable to use and ensure no assembler would be required to exert more than 50 pound of force.

1.4 Target Specifications

The client needs were determined after an analysis of the original project description and a meeting with the client. The client made it clear that certain needs were to be satisfied in order for the project to be successful. As a result, a ranking scale was used to prioritize the needs. The most important priority was given the ranking of 1, a priority of medium importance was given a ranking of 2, followed by a ranking of 3 for a priority of lesser importance. Each client need, along with its respective priority ranking, can be seen in TABLE II.

TABLE II CLIENT NEEDS

Need #	Need Description	Priority
1	One person will be able to manipulate the jig in such a way that all components of the roof assembly can be ergonomically installed and welded by the assembler during fabrication	1
2	Two people will be able to articulate the jig to allow the completed roof assembly to be installed atop the bungalow without removing the roof assembly from the jig	1
3	The jig will improve the safety of the assembler(s) compared to the existing process	1
4	The cost of the jig will be within the budget provided by the client	2
5	The jig will be sufficiently robust to withstand collisions from other work area hazards	2
6	The jig will operate and remain in the work area while not impeding other tasks that may occur in the bungalow cell not relating to roof assembly.	3
7	The jig will be able to adjust for the fabrication of different sized roof assemblies	3

The team assumed that some mechanical assistance will be required to move the roof assembly while it is in the jig due to its weight. The client did not specify a required method to power the jig assembly, but did state that both electrical and pneumatic sources are available. Different mechanical aids to move the jig assembly are considered section 2.

Metrics were established to relate the performance of the final deliverable to the needs of the client. Each metric was given a quantitative technical specification to measure its satisfaction of

the client's need. The list of metrics that were developed can be seen in table III, below. The ratings of importance are the same as in table II (1 being most important, 3 being least important).

TABLE III LIST OF METRICS AND TECHNICAL SPECIFICATIONS

Metric #	Client Need #	Metric	Unit	Marginal Value	Ideal Value	Importance
1	3	Loading capacity	lb	n/a	1,000	1
2	1	Force require to manually move jig	lb	<64	<50	1
3	1,2	Directions in which the roof assembly can be manipulated while in the jig	DOF	n/a	4	1
4	1,2	Articulation height range	ft	4.5-10 from floor	4-10 from floor	1
5	2	Precision of articulations	cm	+/- 10	+/- 5	2
6	7	Adjustability	Sizes	2	4	3
7	6	Maximum height, at any time	ft	14	12'3"	3
8	5	Resistance to impact	kg·m/s	n/a	250	1
9	4	Cost	$ CAD	<10,000	<5,000	2

The metrics that have marginal values of n/a indicate that the ideal value is the only value that will yield a successful project. A detailed list of correlations between client needs and technical specifications can be seen in appendix A. Rational for the marginal and ideal values are also detailed in appendix A.

2. Concept Generation

To begin the second stage of the project, the team generated different possible concepts for the final design. This section will summarize some of the different concepts for the articulation portion of the design. To obtain more detail regarding the thought process for the screening and scoring or concept descriptions, reference the appendices listed in the respective sections below.

2.1 Methodology

Prior to performing any research, the design came to the conclusion that the concept generation could be split into different sections. This was done in order to develop more concept combinations rather than looking at the design problem as one concept with many different pieces. The sections were based on the directions of movement in which the jig assembly could travel as well as the actual roof fixture (the jig section). The sections were named:

- Up and down
- In and out
- Rotation of the roof in the jig
- Jig anchoring

It was assumed that the rotation and jig anchoring sections were independent of the up and down and the in and out sections. In other words, whatever rotational method that was chosen for the final design would work interchangeably with any up and down or in and out design. However, the up and down and in and out sections were deemed dependent to one another. It was for this reason that overall layouts were considered first.

The design team decided that all methods conceived for up and down, as well as in and out, would be considered and screened independently of the research done for overall layouts. This was done in an attempt to maximize the number of combinations of in and out and up and down methods, which could later be eliminated based on its ability to work with the overall layout or with more rigorous scoring methods. Furthermore, the overall layouts were also used to gain approval from the client.

2.2 Preliminary Concepts

External and internal search methods were performed in order to develop as many concepts as possible. These methods ranged from individual research, to talking to people in industry, to benchmarking different products to brainstorming as a group. The names of the different concepts generated for each of the sections can be seen in TABLE IV.

TABLE IV CONCEPTS GENERATED FOR EACH SECTION

Section	Concept Name	Section	Concept Name	Section	Concept Name
Overall Layout	Boom Lift	**Up and Down**	Hand Winch	**Roof Anchoring**	Bench Vise
	Robotic Arm		Motorized Winch		Scissor Clamp
	Jib Hoist	**Rotation of Roof and Jig**	Shafts on Either Side of the Jig		Multiple Toggle Clamps
	Roller Coaster				
In and Out	Hydraulic Cylinder		Rotating Wrist		Vacuum Lift
	Pneumatic Cylinder		Bell Crank		Lifting Lug Utilization
	Rack and Pinion		Rigging Cable and Stopper		
	Linear Screw Actuator				
	Belt/Chain Linear Actuator				
	Chain & Gear System				
	Motorized Rollers on a Linear Guide				

Details to the specifics regarding each of the mechanisms listed in TABLE IV, as well as the research that went into selecting them can be found in appendices B1 to B5. For a better understanding of the overall layout of our design, those concepts will be discussed here along with their advantages and disadvantages.

Overall Layout 1: Boom Lift

The “Boom Lift” design raises the roof assembly by rotating the boom arm. The arm then extends out to move the roof assembly over the bungalow. Figure 2 shows the first overall concept, the “Boom Lift” design.

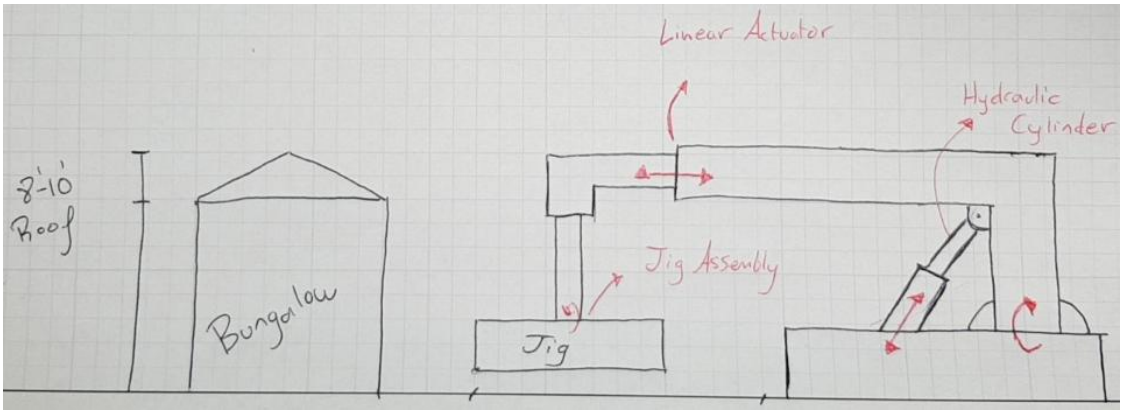

Figure 2. "Boom Lift" Design

Advantages

- Relatively compact

Disadvantages

- Large cantilevered force when arm fully extended.
- Dampeners would be required to reduce bouncing of roof assembly during final installation
- Difficult to line up roof flush with top of bungalow.

Overall Layout 2: Robotic Arm

The “Robotic Arm” design features two members connected at a joint. This design simulates a robotic welding arm. These members move about the joint connecting to two members and the joint at the base. The "Robotic Arm" design can be seen in Figure 3.

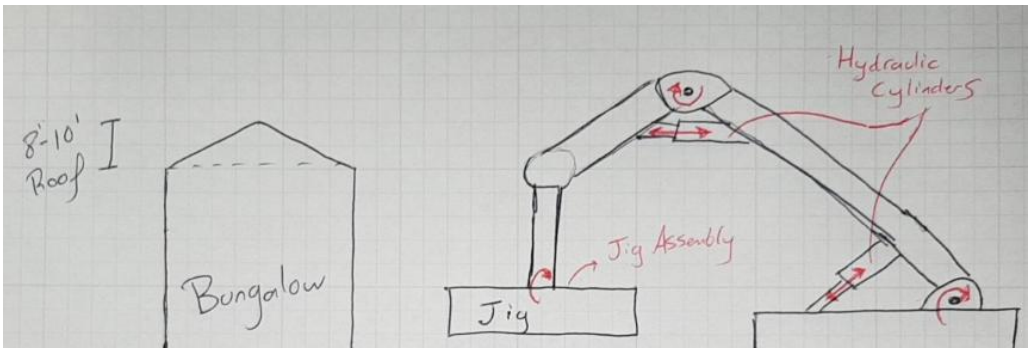

Figure 3. "Robotic Arm" Design

Advantages

- Compact
- Ability to access many different positions two pivot points.
- Can be folded up when not in use.

Disadvantages

- Large cantilevered force when arm fully extended.
- Dampeners would be required to reduce bouncing of roof assembly during final installation.
- Difficult to operate with two pivot points.

Overall Layout 3: Jib Hoist

The “Jib Hoist” design features a Jib Crane support system. This design would have a trolley moving along a horizontal track to transport the roof assembly back and forth. The jig would move up and down on a linear guide to stabilize the roof during assembly and transport. The "Jib Hoist" design can be seen in Figure 4.

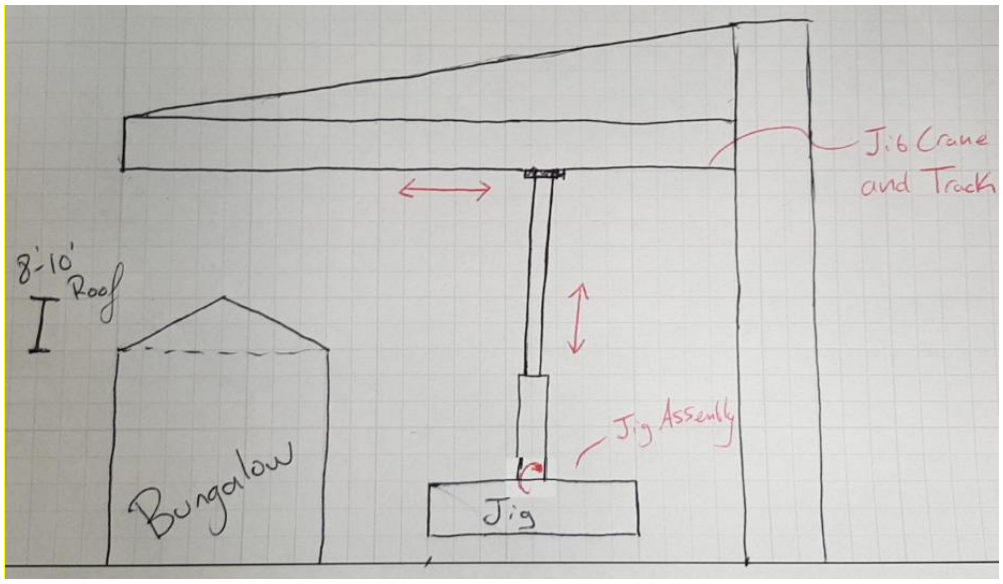

Figure 4. "Jib Hoist" Design

Advantages

- Precise installation of roof to bungalow
- Ability to access many different positions along path of travel
- Easy to operate.
- Many off the shelf parts can be used to reduce cost of fabrication.

Disadvantages

- Bulky
- Would most likely requires guide column to steady load.

Overall Layout 4: Roller Coaster

The “Roller Coaster” design features a track that moves the roof assembly back and forth, as well as up and down. The "Roller Coaster" design can be seen in Figure 5. It mimics a conveyer system. This design also features a small hoist or winch for additional vertical movement of the roof assembly.

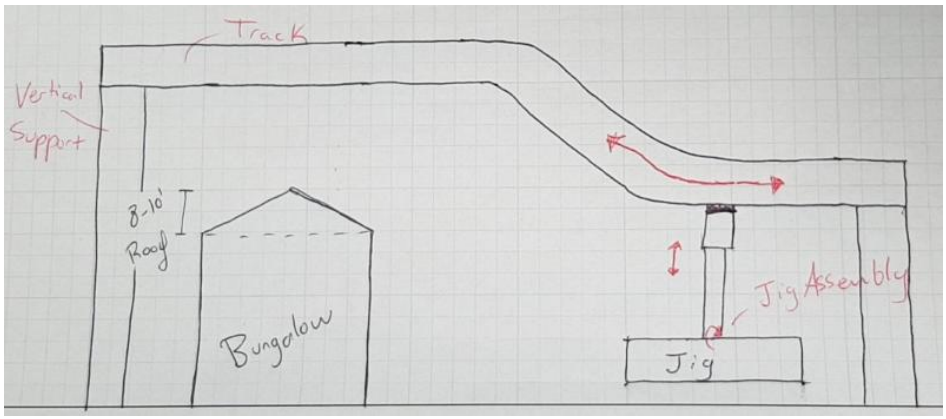

Figure 5. "Roller Coaster" Design

Advantages

- Precise installation of roof to bungalow
- Ability to access many different positions along path of travel
- Easy to operate.
- Many off the shelf parts can be used to reduce cost of fabrication.
- Up and down travel time would be reduced with the conveyor.

Disadvantages

- Bulky
- Would most likely requires guide column to steady load.
- A more complicated geometry than the jib hoist concept.

2.3 Jig Concepts

The jig section of the design will include the individual location methods for the pieces to be assembled, as well as the manner in which the roof is held while it is rotated from top side down to top side up. This section will provide background to the process of the roof jig design.

The jig must have locating elements to locate the trusses of the roof. The trusses can be located through the use of guides on the locating elements. The design team designed the jig to facilitate the assembly of a one piece truss design. This means that the truss will not require assembly when it is added to the roof assembly being fabricated. Based on brainstorming and

team discussions it was deemed that there was one main concept for the roof jig. A concept of this jig assembly can be seen in the figure below.

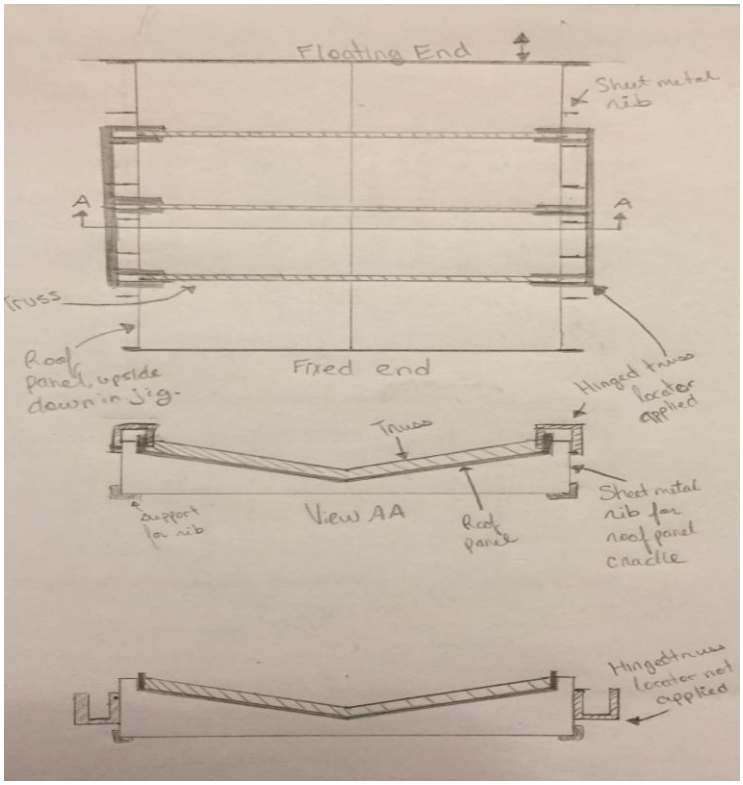

Figure 6. Concept for locating elements in jig assembly.

The roof panel is nested in the jig prior to any other parts being added. The sheet metal rib would match the profile of the roof panel to facilitate nesting. A hinged truss locator is used to locate the trusses along the roof. This locator is hinged so that it will not impede the installation of the roof to the bungalow once the roof is assembled. Toggle clamps will be used to ensure the truss members are fixed against the truss locator while during welding. In order to make the jig functional for different sizes of roofs, floating and fixed ends will potentially be used to ensure flexibility. In figure 7, the floating end will help the jig assembly fix different lengths of roof panels against the fixed end. This concept was designed based on the assumption that the spacing of the trusses are the same for different lengths of roofs. The floating end would slide back and forth in the jig on linear guides as seen in the figure below.

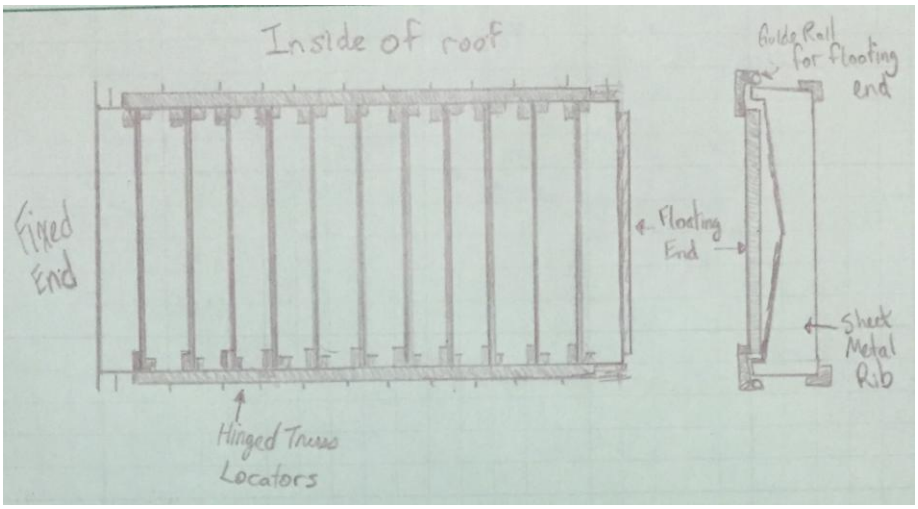

Figure 7. Details of floating end of jig.

Due to all the concepts that were generated a method was required to select the concepts to proceed forward with to the final design stage. A systematic method was thus implemented by the team to select the optimum concept for our design.

2.4 Final Concept

The final concept was obtained by screening all of the preliminary concepts, then performing a more rigorous weighted scoring analysis to obtain the best combination mechanical devices to perform the required movements. This section will detail the final concept that was developed as the focus of this report is on the final design. For more detail regarding the screening and selection process, reference appendix C.

The overall concept that was selected and approved by the client was the jib hoist arrangement. Based on the screening and scoring concepts of the other sections of analysis, the final concept of our design uses are the following concepts to go along with the jib hoist overall layout:

- A power winch with a linear guide will be used to avoid swinging for the up and down motion. The linear guide will be similar to the guides on the weight lifting equipment shown in figure 8.

Figure 8. Linear weight lifting guide.

- The linear guide will be positioned at the end of the fork, as seen in figure 9. This will be done to decrease the occupied space and increase stability of the load.
- Motorized rollers on a linear guide will be the used to move the roof for the in and out motion.
- Shafts on both sides of the jig box are used for jig rotational motion. The orientation of the fork mentioned in the concept generation section will be located in the horizontal direction. This will reduce the clearance between the jig assembly and the linear guide used for the in and out motion (parallel to the floor).
- The roof will be anchored to the jig using pins and the roof lifting lugs.

The sketch of our final concept is shown below in figure 9.

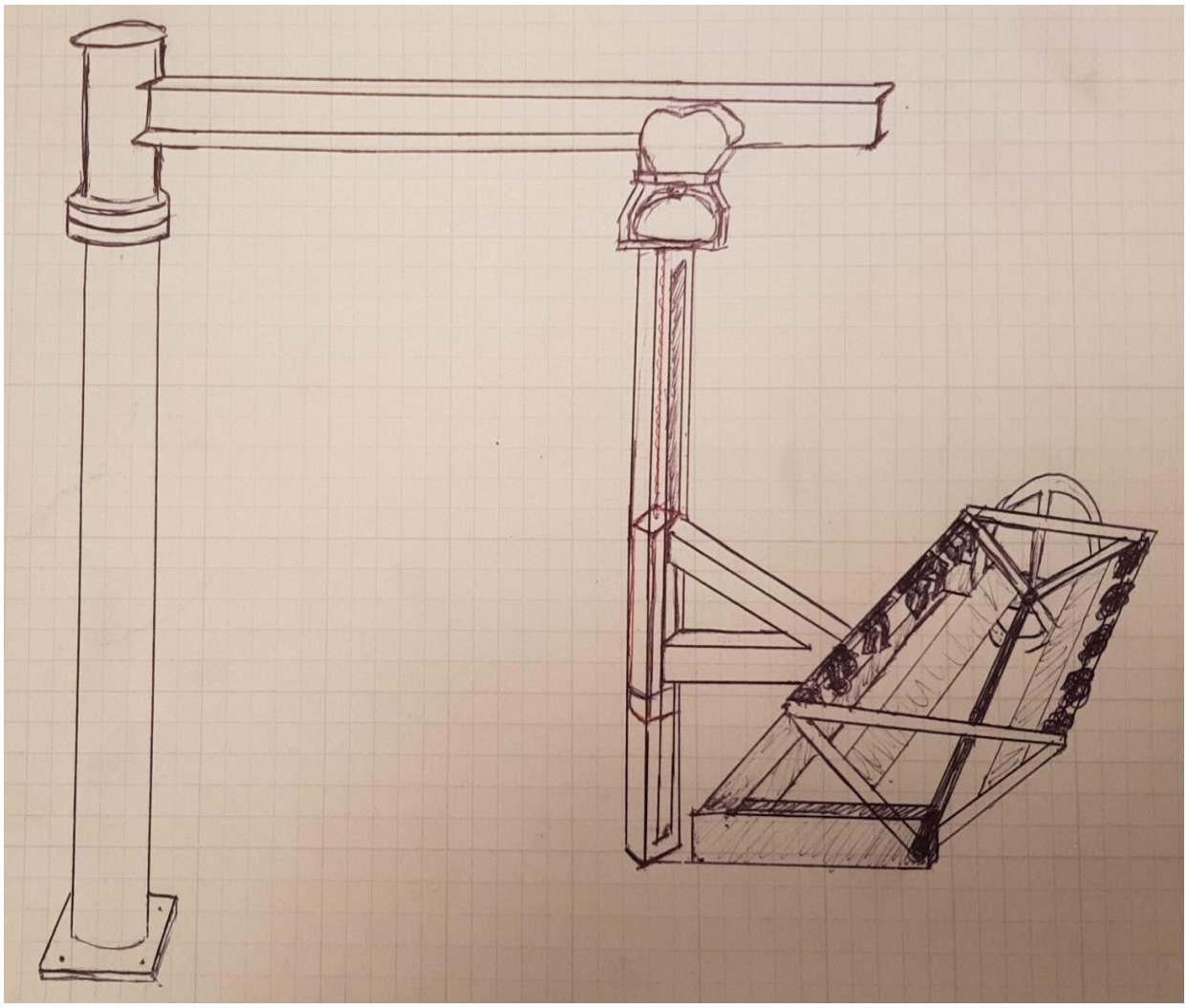

Figure 9. Final concept sketch.

Due to the jib crane's larger extension and height, the design team and client agreed to have the jib crane located on the edge of the bungalow cell. This was done so the current overhead crane would never come in contact with the jib crane. Furthermore, the jib crane and jig would not occupy space in the bungalow cell while not in use. The client made a request that the jib hoist be able to pivot about the mast column to provide more flexibility in the work space. Methods of rotation about the mast column will be discussed in the jib rotation section.

3. Detailed Design

To This section will summarize the design of the final articulating jig. Results of the analysis and feature descriptions will be discussed in this section. A more in depth analysis, including calculations, free body diagrams and other supplemental information can be found in Appendix D, should this information be of interest.

3.1 Methodology

The objective of the design was to ensure that the jig could be rated for 1000 lbs and be used by one person to assemble the roof. In order to complete the analysis in a systematic manner, the team split the final design into different sections, similar to the concept generation. The sections were based on the required directions of movement and the actual roof fixture. The sections were named:

- Jig section
- Fork/Rotation of jig
- Vertical Stabilization
- Jib Crane

Each section was dependent on one another in terms of resultant forces and paths of travel, which would constrain size. The analysis of each section will include:

- Results and key points of the analysis
- Details regarding the functionality of the design
- Material choice
- Standards used in design

3.2 Jig Design

The design of the jig details the assumptions made in the design of the jig, the features that the jig has and the analysis used to determine the jig and its dimensions. The jig was designed based on the roof assembly drawings provided by Modern Manufacturing Ltd [2] [3] [4]. To

view the preliminary engineering drawings of the jig designed for the roof assemblies, refer to appendix G.

3.2.1. Assumptions

To allow for the jig to be designed for the roof assembly and to allow for it to be used for multiple roof assemblies, assumptions had to be made. These assumptions were presented to the client for approval. These assumptions are:

- The truss will be a one piece truss
- The roof assemblies will have trusses located 16 in. on centre from one another
- Roof lifting lug locations can be relocated as long as corresponding roof lifting lug locations are the same distance from roof centre.

Jig features were then designed based on these assumptions.

3.2.2. Features

There are two main functions the jig must provide. The first is the jig must provide an area for the assembly of the bungalow roof, which allows for the increased productivity of roof assembly. The second is the jig must be able to secure the roof to the jig during rotation and movement to the bungalow. Furthermore, the jig must allow the roof to be unsecured with ease. The designed jig achieved this through a variety of features:

- The jig was designed to cradle the bungalow roof, with the peak of the roof facing the ground. This allows the 2 ft. x 4 ft. panel sections that make up the bungalow roof to be supported by the jig so the panels can be welded together. The jig assembly can be seen in Figure 10.
- The jig was designed to leave a 1 ft. space along the center of the jig to allow room for the roof cap and allow the main body of the roof to rest on the jig which allows for better distribution of loading. The space also accounts for room to weld the roof cap to the roof assembly.
- The jig was designed with the goal of minimizing weight to allow for reduction in material and costs. To minimize weight, sheet metal jig ribs were used and

dimensions of jig parts were optimized to reduce weight. Jig ribs are pieces of sheet metal cut to the outline of the roof assembly, which allows the roof assembly to rest on the jig. Optimizing parts were completed through the use of excel solver by modifying dimensions to minimize the volume of the parts until the stress in the part due to loading reached the yield and shear strength of the material with the safety and stress concentration factor applied.

- The jig was designed with fork pockets attached to the jig. The fork pockets allow for the jig to be lifted in and out of place by a forklift. The fork pockets also act as a stand for the jig when it is not in use or if it is to be rested on the ground.
- The jig was designed with a shaft and flange to allow the jig to be rotated, as well as attach to the fork arm shaft. The flange connection of the jig to the flange connection of the fork arm allows for multiple jigs to be swapped in and out of roof assembly. This allows for a 4 ft. x 6 ft. jig to be able to be used or another jig if it was required, as long as it fits within the fork arm shaft.
- The jig was designed to be able to accommodate three out of the four roof sizes. The design allows for this by having the same spacing between trusses for each roof assembly and by having multiple lifting lugs to accommodate for the specific lifting lug locations of the roof. The roof needs to be pressed up against one of the side plates of the jig to align with the truss locators and lifting lugs properly. As this jig does not accommodate a 4 ft. x 6 ft. roof, a separate jig would need to be designed for it. It should be noted that spacing of the roof lifting lugs were altered to allow for the jig to accommodate multiple sizes. The lifting lugs are still spaced an equal distance away from the centre though. The 8 ft. x 8 ft. and 8 ft. x 16 ft. roof assembly lifting lug locations are spaced 32.29in. on center from the outer sides of the roof. While the 8 ft. x 12 ft. roof assembly lifting lug locations are spaced on 16.31 in. on center from the outer sides of the roof.

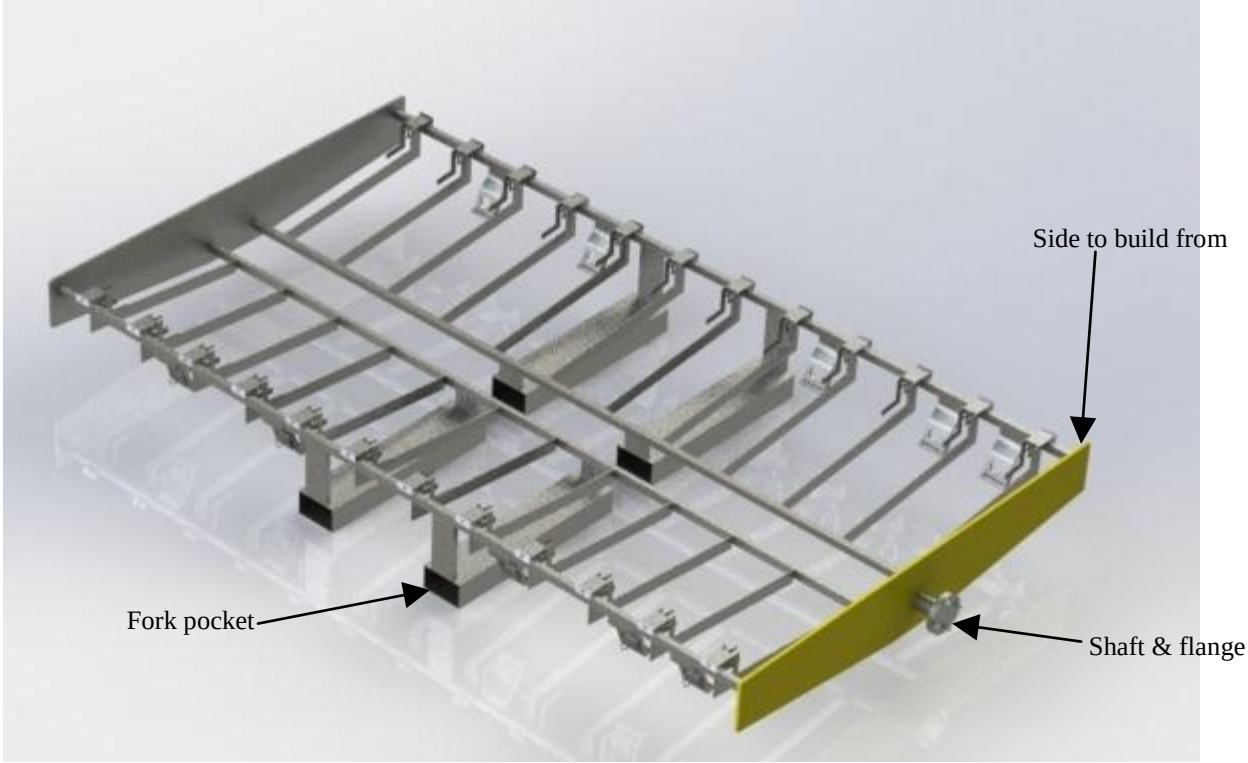

Figure 10. Jig Assembly Model.

- The jig was designed to include truss locators to expedite the installation process of the roof trusses. The truss locators are parts that guide the roof trusses to the specified design locations. The truss locators are hinged to the top bar to allow the element to be hinged in and out of the jig to allow the truss locator to be used during the roof assembly stage but out of the way for the installation of the roof to the bungalow. A magnet is located on the truss locator that allows it to be fixed to the outside of the top bar, ensuring it is not in the way during the installation of the roof to the bungalow.
- The jig was designed with toggle clamps attached to the top of the truss locators. The toggle clamps allow for the 2 ft. roof panels to be clamped to the jig ribs to ensure that the panel won't move around as assemblers work on the roof panels. To achieve this, ribs were located at the same position as the truss locators. This allowed for the 2 ft. panels to be supported while applying a clamping force to the centre of the ribs to

prevent the roof panel from bending. The truss locator with a toggle can be seen in Figure 11.

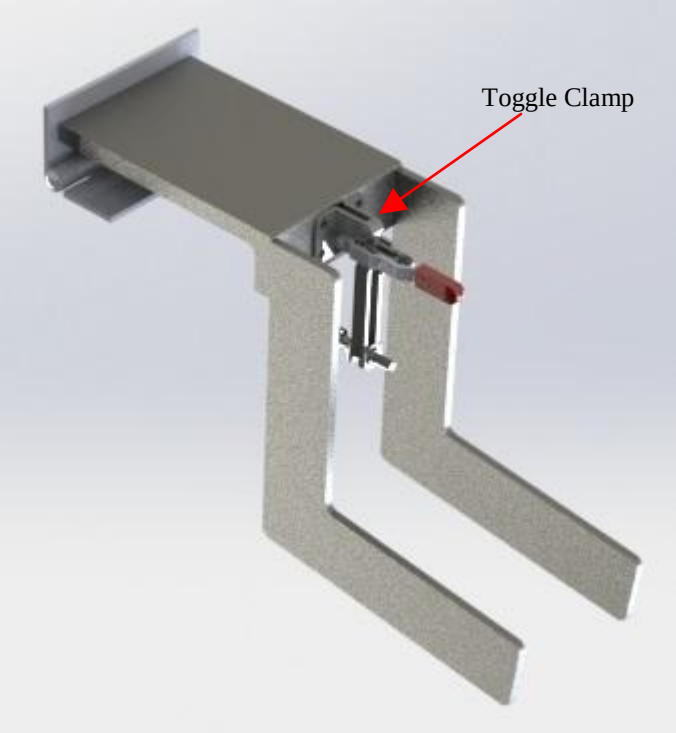

Figure 11. Truss locator with toggle clamp.

- The jig was designed with jig lifting lugs. Jig lifting lugs were included as the means to fix the roof assembly to the jig during rotation of roof assembly and as locating elements for the roof lifting lugs. Jig lifting lugs were designed to allow for a custom 3 in. pin to match the diameter of the roof lifting lugs. The pin and jig lifting lugs have a bolt hole drilled in them to allow for the installation of a bolt to fix the pin and jig lifting lug to each other to prevent the bolt from falling out during rotation. The bolt and pin is then removed once the roof is placed on the bungalow. The jig lifting lug also works as a locating element for the roof lifting lug as it has a rest at the bottom of the lug to allow the roof lifting lug to rest on. The jig lifting lug also has a side built onto it to allow the roof lifting lug to press up against, and the roof lifting lug is pressed up against the roof. This will allow the roof lifting lug to be welded to the correct design position efficiently. A figure showing the jig lifting lug can be seen in Figure 12. While an exploded view of how the jig lifting lug connects to the roof

lifting lug can be seen in Figure 13. Finally the location of the jig lifting lug and truss locators on the top bar of the jig can be seen in Figure 14.

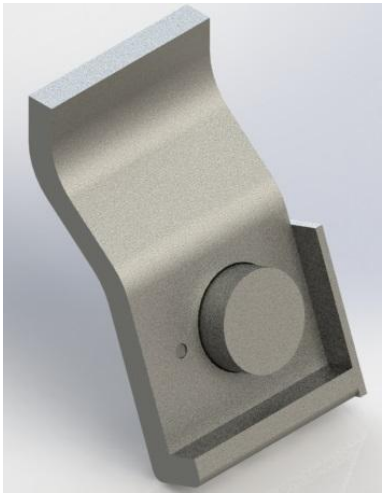

Figure 12. Jig lifting lug.

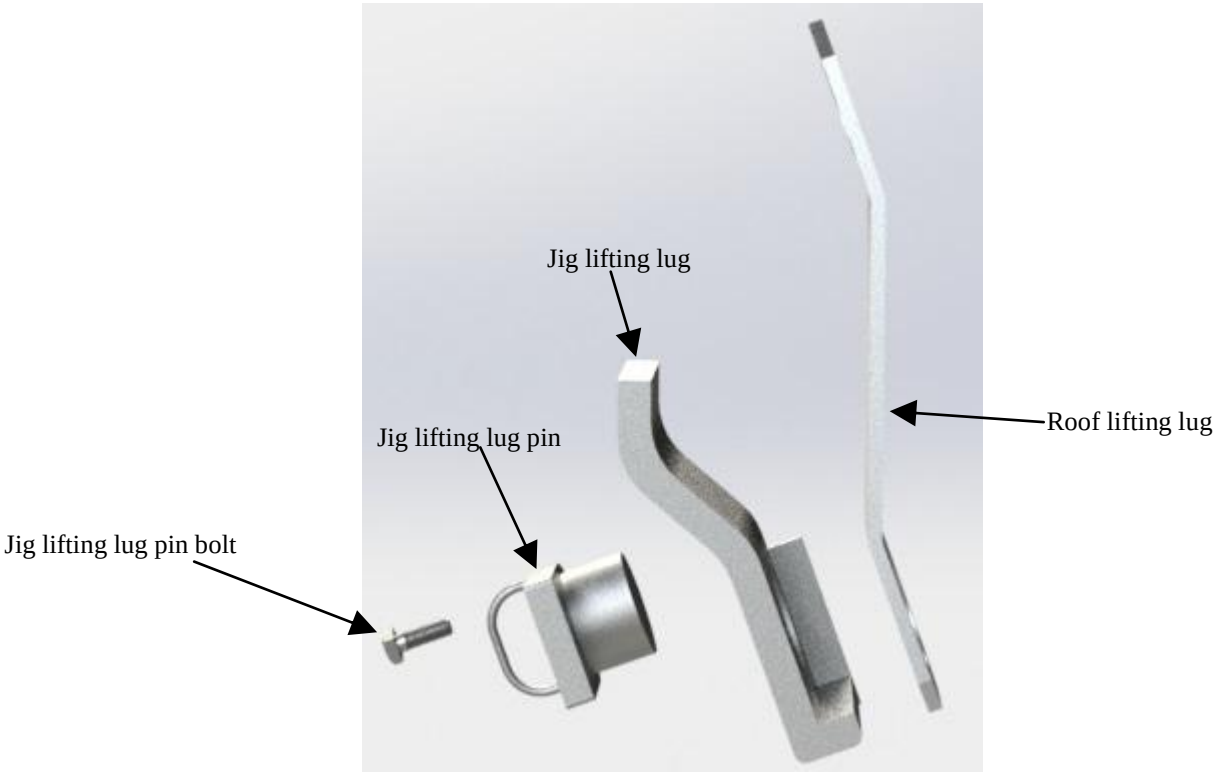

Figure 13. Exploded view of jig lifting lug connection to roof lifting lug.

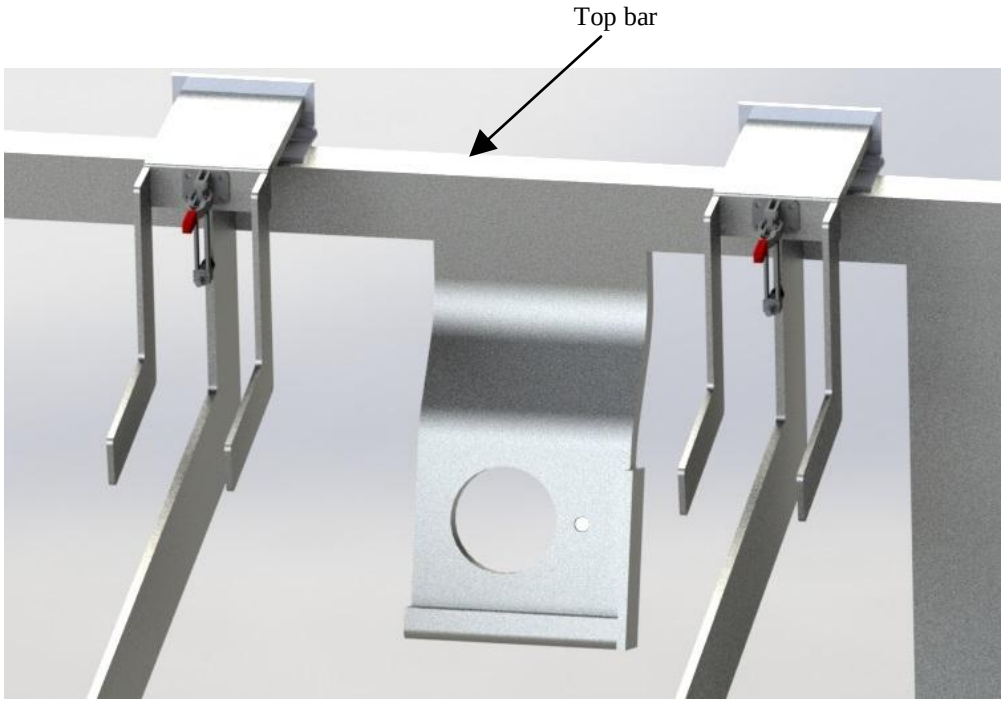

Figure 14. Jig lifting lug and truss locator assembly locations.

Based on these design features a jig was created. The parts that make up the jig where then analyzed to account for the variety of stresses.

3.2.3. Analysis

As the jig involves rotation, the loading applied by the roof to the jig varies to different locations of the jig depending on the orientation. The jig was thus designed to allow for the 360 degree range of motion. For the analysis, the jig was designed to withstand the distributed loading of 1,000 lbs to account for the weight of the roof and additional forces on the jig. As the max roof weight is 560 lbs the additional forces are 440 lbs. These additional forces account for the workers working on the jig. A point load of 440 lbs was also considered for the analysis of the jig. Based on these loading considerations, the analysis took into account torsion, bending moment in all 3 axes, buckling, deflection, rotation, shearing, compression, tension, fatigue and the combined loading. Parts of the jig were designed to the yield strength or shear strength with safety factors and stress concentrations factors for both strengths. Parts were also designed to ensure deflection would not impact the jig or roof assembly significantly. These parts were then optimized using Excel Solver to minimize the weight of the jig to minimize cost and material for the whole jib crane assembly. For detailed analysis of designed jig parts refer to Appendix D.

While the final dimensions of the designed parts that were analyzed can be seen on the preliminary engineering drawings in Appendix F. TABLE V below shows an overview of the analysis for all designed parts in regards to the material used, factors used and design limiting stresses. Design limiting stresses relate to the stresses that limit the size of the material and what is the most likely cause of failure. Part number refers to the numbers in the preliminary engineering drawings in Appendix F.

TABLE V ANALYSIS OVERVIEW

Part	**Design Limiting Stresses**	**Factors**	**Material**
1-1-01: Flat Bar	Bending stress due to loading of jig at 90^0 & limiting deflection to 1in.	Safety factor = 3	CSA G40.21-44W
1-1-02: Jig Rib	Bending stress due to point loading.	Safety factor = 3 Stress concentration factor = 2.5	CSA G40.21-44W
1-1-03: Side Plate	Bending stress due to loading of jig at 90^0	Safety factor = 3	CSA G40.21-44W
1-1-04: Jig Shaft	Stress due to combined loading	Safety factor = 3	4340 Steel
1-1-05: Flange	Flange bearing stress	Safety factor = 3 Stress concentration factor = 2.5	4340 Steel
1-1-08-03: Truss Locator Body	Bending stress	Safety factor = 2 Stress concentration factor = 1.5	CSA G40.21-44W

1-1-08-04: Truss Locator Guide	Bending stress	Safety factor = 2 Stress concentration factor = 1.5	CSA G40.21-44W
1-1-08-05: Plate	Bending stress	Safety factor = 2 Stress concentration factor = 1.5	CSA G40.21-44W
1-1-09-01: Rectangular Tubing	Bending stress	Safety factor = 3	CSA G40.21-44W
1-1-09-02: Flat Bar Outer Support	Bending stress due to loading of jig at 90^0	Safety factor = 3	CSA G40.21-44W
1-1-09-04: Fork Pocket Ramp Support	Bending stress due to loading of jig at 90^0	Safety factor = 3	CSA G40.21-44W
1-1-10-01: Lifting Lug	Bending stress due to loading of jig at 90^0	Safety factor = 3 Stress concentration factor = 3	CSA G40.21-44W
1-1-10-03: Jig Lifting Lug Pin	Shear stress and existing design conditions	Safety factor = 3	CSA G40.21-44W

A safety factor of 3 was applied to all designed parts that were involved in the support of the roof assembly as per the ASME Below the Hook standard [5]. A safety factor of 2 was applied to truss locators due to the fact that truss locators do not fall under a standard and a lower safety factor would reduce costs. Stress concentration factors were dependent on the features of the part. There were two materials that were used, CSA G40.21-44W and 4340 steel. Steel was chosen as the material of choice as Modern Manufacturing is capable of welding steel, it has high strength capabilities and it has a much higher melting temperature than compared to aluminum which is important for design since welding takes place on it. CSA G40.21-44W was

the main material used as it had a suitable strength, was capable of being used in sheet metal applications and it costs less than 4340 steel. 4340 steel was used for the shaft and flange to reduce the diameter of the two parts to reduce costs of associated parts like bearings. 4340 steel was used due to its higher strength. The properties of the two main materials can be seen in TABLE VI.

TABLE VI MATERIAL PROPERTIES

Material	Yield Strength	Shear Strength	Young's Modulus	Endurance Limit	Modulus of Rigidity
CSA G40.21-44W	44 ksi [6]	25.38 ksi	27557 ksi [7]	39.15 ksi [8]	10900 ksi [9]
Cold Drawn 4340 Steel	68 ksi [10]	39.2 ksi	27557 ksi [7]	40 ksi [10]	10900 ksi [9]

Shear strength was determined from the distortion energy theory, which states that the shear strength of a material is 0.577 times that of the materials yield strength [10].

3.3 Fork Design and Jig Rotation

This section will discuss the design of the fork and the method in which the jig is able to rotate. The results of the analysis, along with the features of the design, will be the main focus of this section. A more in depth analysis is available in appendix D.2, for the interest of the reader.

3.3.1. Fork

The fork was made of four pieces of rectangular tube and was designed to be lifted by a lifting lug. The fork analysis was divided into four sections: the fork tine, the long beam, the fork shank and the lifting lug base as shown in Figure 15.

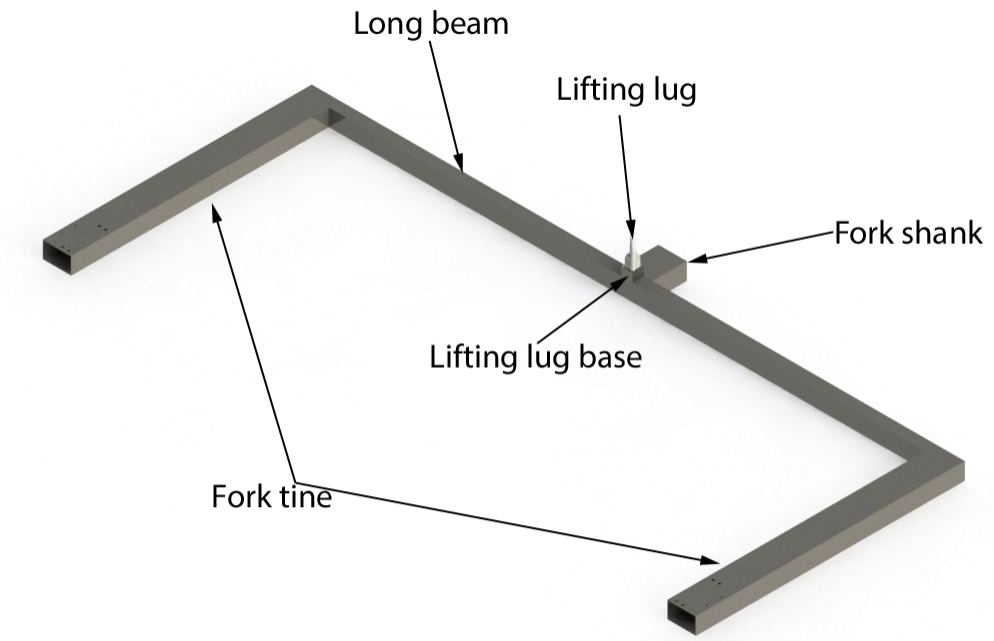

Figure 15. Divided sections of the fork.

The following considerations were made when designing the fork assembly:

- The fork was designed to be able to hold the jig and roof in place for operators to assemble the roof. A rotation device was mounted at the end of each of the fork tine so that the jig and roof could be attached to the rotation device.
- The fork tine was designed to have sufficient length to give enough space for the jig to rotate without touching the fork, and to allow sufficient access around all sides of the roof for the assembler.
- The long beam was designed to have sufficient length to give enough space and clearance for the jig to fit within the fork.
- The fork tine, long beam and the fork shank were designed to the bending strength of their material based on the weight of the jig, roof and the self weight.

- The lifting lug base was designed to be welded on the center of long beam for the lifting lug to bolt in. It was designed to provide enough depth for the bolt on the lifting lug. It was designed to be capable of resisting the tensile strength from the lifting lug.

The final selections of the fork design and any considerations are listed in the table below.

TABLE VII FINAL DESIGN PARAMETER SELECTION FOR FORK

Design Consideration	**Material / Description**	**Size / Specifications**
Fork tine	• CSA G40.21-44W • Yield Strength = 44000 psi	• 10” x 6” x 0.1875” rectangular tube • Length: 94”
Long beam	• CSA G40.21-44W • Yield Strength 44000 psi	• 4” x 6” x 0.5” rectangular tube • Length: 208.19”
Fork shank	• CSA G40.21-44W • Yield Strength = 44000 psi	• 6” x 10” x 0.5” rectangular tube • Length: 12”
Lifting lug base	• AISI 1020 LOW CARBON/LOW TENSILE STEEL • Yield Strength: 42748 psi	• 4” x 4” x3” cube • Threaded hole: 1.25”-7

The results of the analysis related to the fork are as listed below in TABLE VII.

TABLE VIII FORK ANALYSIS RESULT

Component	**Stress Type and Location**	**Factor of Safety**	**Magnitude**	**Allowable**
Fork tine	Bending on one end, the other end fixed	3	12114 psi	14667 psi
Long beam	Bending on both ends	3	13460 psi	14667 psi
Fork shank	Bending on one end, the other end fixed	3	12699 psi	14667 psi

Lifting lug base	Tensile strength from lifting lug	3	338 psi	14249 psi

The detail steps of calculation of the fork are shown in Appendix D

3.3.2. Rotation of jig

A rotation device was designed allow the roof to rotate while in the jig. This device was separated into three subsections: shafts and flanges, bearings and bases, and hand wheel and hand wheel lock. The overall layout of the rotation device is as shown in Figure 16. The jig and roof were connected to one end of the shaft by a flange, and the shaft was inserted in two bearings mounted on the fork tine. A hand wheel was welded on the other end of the shaft for the operator to rotate the jig and roof. The hand wheel lock device was installed on the shaft and the fork tine to keep the jig and roof from rotating while the operators are assembling the roof by placing a latch into the socket of the plate. When the operators installing the roof on to the bungalow, the hand wheel lock would provides the jig rotation with a 2º of free rotation when the roof is in position to be installed on the bungalow. This was done to allow the roof to find its natural resting place without going in skewed. This will minimize the need for a hammer to remove the pins securing the roof in the jig every time a roof is placed on a bungalow

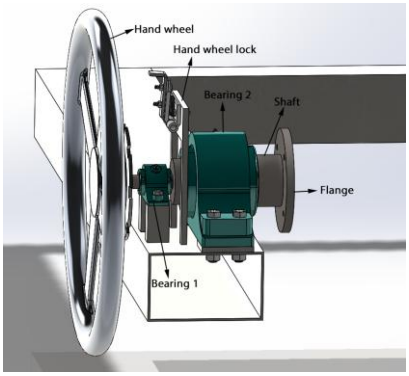

Figure 16. Overall layout of rotation device for the jig and roof.

Shafts and flanges

The shaft was designed as a three-stage stepped shaft. It was designed to connect the jig and the fork to be able to rotate the jig. The three-stage stepped shaft is shown in Figure 17 below.

- The shaft was a part of the rotation device and it was designed to be able to connect the jig and the fork by a flange on one end, it was rotated by a hand wheel which was welded on the other end.
- The shaft was designed as a three-stage stepped shaft, it would need two bearings to mount on the fork tine. The use of two bearings could distribute and balance the shear forces and bending moment on either side of the jig and roof.
- On the side with the hand wheel, the stage-1 section was designed to provide enough length for the hand wheel and hand wheel lock device. The stage-3 section was designed to provide enough length to connect to the jig.
- A well-rounded fillet was implemented between each stage of the shaft to minimize the stress concentrations at the steps in the shaft.

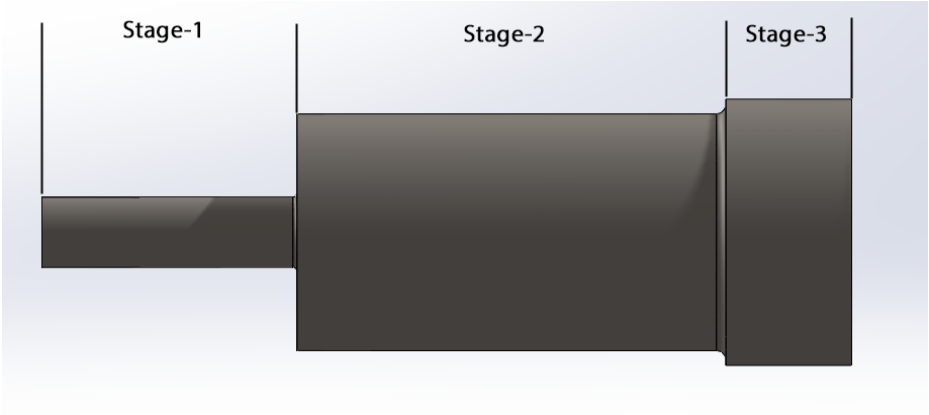

Figure 17. Three-stage stepped shaft.

The final selection of the shaft design and any considerations are listed in the table below.

TABLE IX FINAL DESIGN PARAMETER SELECTION FOR SHAFT

Design Consideration		**Material / Description**	**Size / Specifications**	**Other**
The side with hand	Stage-1 section	• 4340 Alloy Steel • Yield Strength = 68000 psi	• Diameter: 1.1875in. •Length: 4.31in.	Fillet radius between stage-1 and stage-2: 0.07in.

wheel	Stage-2 section	• 4340 Alloy Steel • Yield Strength = 68000 psi	• Diameter: 4in. •Length: 7.25in.	Fillet radius between stage-2 and stage-3: 0.16in.
	Stage-3 section	• 4340 Alloy Steel • Yield Strength = 68000 psi	• Diameter: 4.5in. •Length: 2.125in.	
The side without hand wheel	Stage-1 section	• 4340 Alloy Steel • Yield Strength = 68000 psi	• Diameter: 1.1875in. •Length: 4.31in	Fillet radius between stage-1 and stage-2: 0.07in.
	Stage-2 section	• 4340 Alloy Steel • Yield Strength = 68000 psi	• Diameter: 1.1875in. •Length: 4.31in.	Fillet radius between stage-2 and stage-3: 0.16in.
	Stage-3 section	• 4340 Alloy Steel • Yield Strength = 68000 psi	• Diameter: 1.1875” •Length: 4.31in	

The results of the analysis related to the shaft are as listed below in TABLE X.

TABLE X SHAFT ANALYSIS RESULT

Component	**Stress Type and Location**	**Factor of Safety**	**Magnitude**	**Allowable**
Stage-2 section	Bending stress on the stage-2 shaft	3	8244 psi	22667 psi
Stage-3 section	Bending stress on the stage-3 shaft	3	5790 psi	22667 psi

The detail steps of calculation of the fork are shown in Appendix D

Bearings and Bases

Two bearings were mounted on the bearing bases which are welded on each side of the fork tine. The bearings were to hold the shaft for different sizes at different stages. The bearings and the bearing bases are as shown in Figure 18 below.

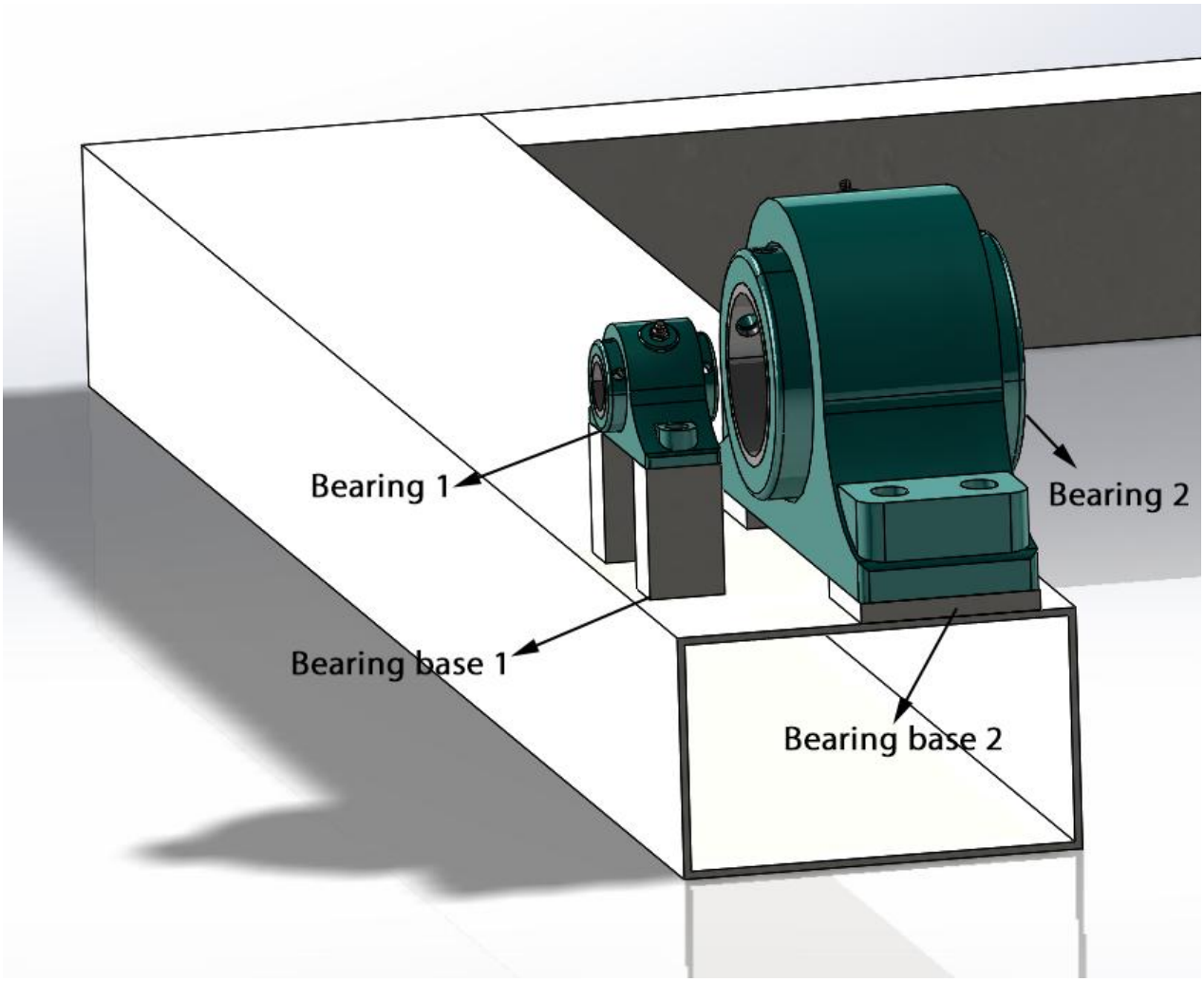

Figure 18. Bearings and bearing base.

The final selection of the bearings and bearing bases design and any considerations are listed in the table below.

TABLE XI FINAL DESIGN PARAMETER SELECTION FOR BEARINGS AND BEARING BASES

Design Consideration	**Material / Description**	**Size / Specifications**
Bearing 1	• Pillow Block Roller Bearing Unit - Two-Bolt Base • Vendor: Baldor (023000)	• Bore diameter: 1.1875in. • Base width: 1.88in. • Base to bore centerline: 1.5in. • Radial static load capacity: 15760 lb

Bearing 2	• Pillow Block Roller Bearing Unit - Four-Bolt Base • Vendor: Baldor (023691)	• Bore diameter: 4.0000in. • Base width: 4.5in. • Base to bore centerline: 4.25in. • Radial static load capacity: 154000 lb
Bearing base 1	• AISI 1020 Low Carbon/Low Tensile Steel • Yield strength: 14667 psi	• 1.38” x 1.88” x 3.25” cube • Bolt hole number: 1 • Bolt hole diameter: 0.56”
Bearing base 2	• AISI 1020 Low Carbon/Low Tensile Steel • Yield strength: 14667 psi	• 3.34” x 4.5” x 0.5” cube • Bolt hole number: 2 • Bolt hole diameter: 0.88”

The results of the analysis related to the bearing bases are as listed below in TABLE XII.

TABLE XII BEARING BASES ANALYSIS RESULT

Component	**Stress Type and Location**	**Factor of Safety**	**Magnitude**	**Allowable**
Bearing base 2	Tensile stress from bearing 2	3	490.82psi	14249 psi

The detailed steps of calculation of the hand wheel lock device will be shown in Appendix D.

Hand wheel and hand wheel lock

A hand wheel was welded on the end of the stage-1 section to allow the assemblers to rotate the jig and roof. A hand wheel lock was designed to hold the wheel from rotating freely. The hand wheel and the locking device are shown in Figure 19.

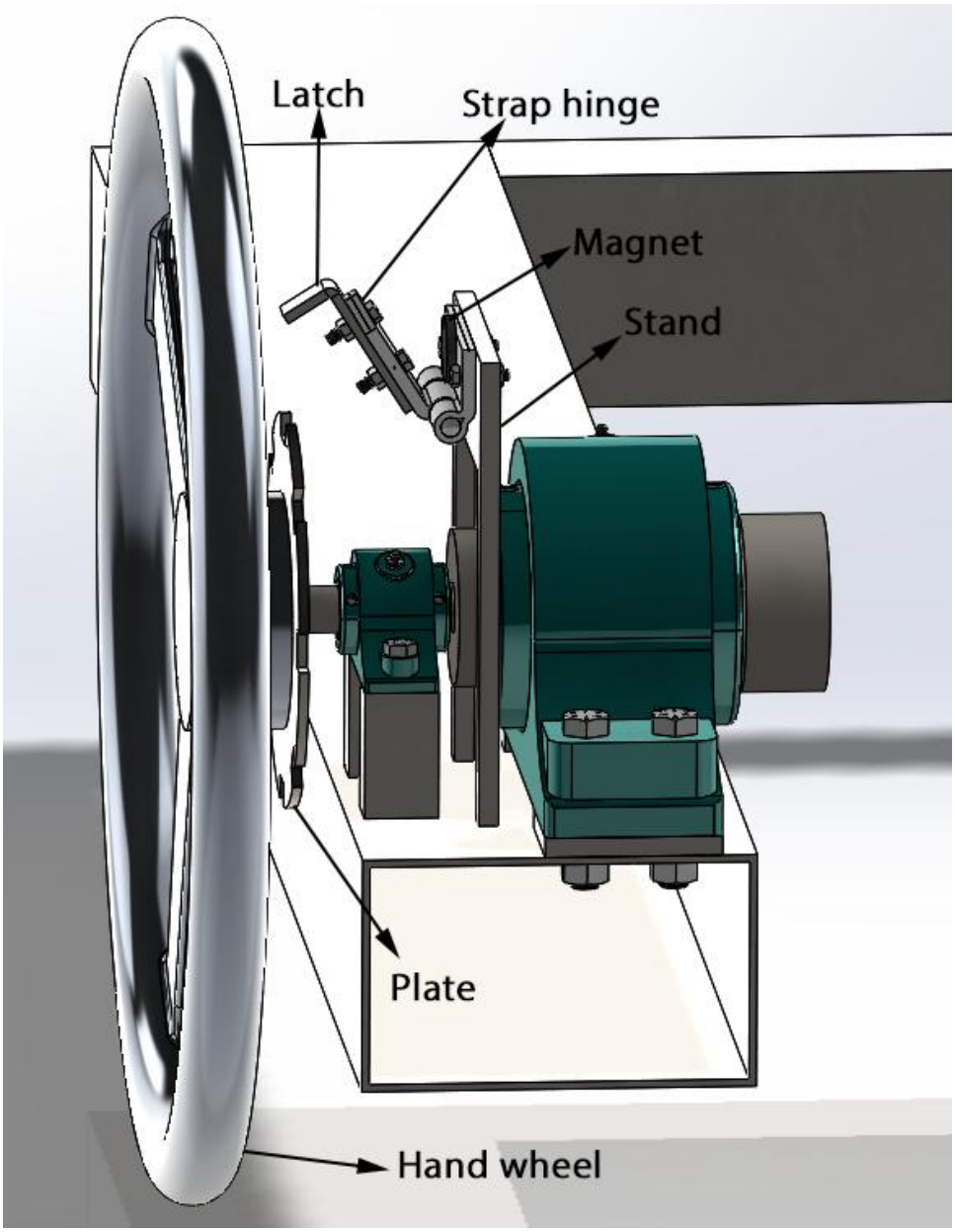

Figure 19. Hand wheel and Hand wheel lock.

Some features regarding the hand wheel are:

- The hand wheel was designed for operators to rotate the jig and roof through the shaft attached to it.
- The hand wheel lock device was designed to mount on the fork tine and a plate with sockets was designed to be welded on the end of hand wheel stud.

- The hand wheel lock device was designed to lock the jig from rotating. When the roof is to be placed on the bungalow, 2º of play has been implemented in order to let the roof find its natural resting place, hopefully avoiding any jamming.
- The latch and the plate were designed to be capable of resisting the bearing stress when the hand wheel lock device locking the hand wheel.
- A magnet was designed to be placed on the back of the hinge so that it could be easily fixed in the upright position while the hand wheel is being used.

The final selection of the hand wheel and hand wheel lock device design and any considerations are listed in the table below.

TABLE XIII FINAL DEISGN PARAMETER SELECTION FOR HAND WHEEL AND HAND WHEEL LOCK DEVICE

Design Consideration	**Material / Description**	**Size / Specifications**
Hand wheel	• Aluminum Four Spoke Hand Wheel • 319 Aluminum	• Wheel diameter: 30in,
Stand	• AISI 1020 Low Carbon/Low Tensile Steel • Yield strength: 14667 psi	• 8in. x 12in. x 0.5in. sheet metal • Cut size: 6.5in. x 9in. • Bolt hole size for hinge: 0.3125in. • Threaded size for magnet: 0.5in-20
Hinge	• Strap hinge • Vendor: McMaster-Carr (1796A25)	• Mount screw size: 0.3125in.
Latch	• AISI 1020 Low Carbon/Low Tensile Steel • Yield strength: 14667 psi	• 0.25” sheet metal • Bend down 90° • Bolt hole size for hinge: 0.3215in.
Magnet	• Nonmarring Encased Magnet with Threaded Stud • Vendor: McMaster-Carr (7132T24)	• Diameter: 1.6875in. • Thread size: 0.25in.-20
Plate	• AISI 1020 Low Carbon/Low Tensile Steel • Yield strength: 14667 psi	• 0.25in. sheet metal • Outer diameter: 10in. • Inner diameter: 1.1875in.

The results of the analysis related to the hand wheel lock device are as listed below in TABLE XIV.

TABLE XIV HAND WHEEL LOCK DEVICE ANALYSIS RESULT

Component	Stress Type and Location	Factor of Safety	Magnitude	Allowable
Latch and Plate	Bearing stress when they are connected from torque from the shaft	3	9863.04 psi	14249 psi

3.4 Vertical Stabilization

The detailed design of the "Vertical Stabilization" section encompasses the design of the horizontal trolley that will move the entire jig assembly along the main jib crane, and the design of our vertical stabilization bar along with its vertical guide trolley where our jig assembly will be attached. The horizontal trolley was designed first.

3.4.1. Horizontal Trolley

The horizontal trolley is what will be installed on the main jib crane I-beam. It will hold the vertical stabilization bar along with the electric hoist that will raise and lower the jig. Considerations for the horizontal trolley included the following:

- The trolley frame must be designed such that the vertical guide column can be attached to it as well as the electric hoist. The distance between these two must be 16.34 in., as specified by the fork design in section 3.3.
- The trolley frame must be able to accommodate three track wheels on either side of the main beam: two on the bottom side of the beam for support, and one on the top side of the beam to prevent the assembly from tilting should it ever become unbalanced.
- The trolley frame must be constructed of a material that can stand the stresses associated with supporting the vertical hoist and the vertical support beam.

- The two front track rollers must be able to support the entire jig, roof, and fork assemblies, totaling 5,000 lbs when applying our safety factor. The rear track rollers must be able to support the vertical guide column, weighing 259 lbs.
- The trolley must be able to be easily moved in and out using manual power. This will be analysed using the resistance coefficients of the track rollers.
- The vertical hoist selected must be able to support the entire jig, roof, and fork assemblies, totaling 5,000 lbs.
- The pin that will support the vertical hoist must be able to resist shear and bearing stresses associated with the vertical force from the hoist (on its center) and its support from the trolley frame (on either end).
- The trolley must accommodate a flat plate to which the vertical guide column will be attached. The size of this slot will match the size of the support plate designed in the guide column section.
- The trolley must be manufacturable, and must be able to be assembled on our main jib crane I-beam. Therefore, its width must be adjustable.

The final selections required for the design considerations listed and any related analytical results are shown in TABLE XV.

TABLE XV FINAL DESIGN PARAMETERS FOR THE HORIZONTAL TROLLEY

Design Consideration	**Material / Description**	**Size / Specifications**
Trolley Frame	• CSA G40.21-44W • Yield Strength = 44 ksi •Shear Strength = 25.4 ksi	• 0.25 in. Thick
Track Rollers	• Flanged Threaded Track Roller • Vendor: McMaster Carr (6318K56)	• 3" Diameter, 12,000 lb Radial Capacity (ea)
Hoist Pin Support	• CSA G40.21-44W • Yield Strength = 44 ksi •Shear Strength = 25.4 ksi	• 1.5 in. Diameter • 19 in. Length • 1.5-6 Threading, 3 in. on either end
Vertical Hoist	• CM Lodestar Electric Chain • Vendor: McMaster Carr (3316T975)	• 6,600 lbs. Capacity • 10’ Lift span • 5 Feet/min lift speed

Analytical results related to the horizontal trolley are shown in TABLE XVI.

TABLE XVI HORIZONTAL TROLLEY ANALYSIS RESULTS

Component	**Stress Type and Location**	**Magnitude**	**Allowable**	**Other**
Trolley Frame	Bearing at Hoist Pin Support Bearing Area	20.0 ksi	25.4 ksi	6.37 ksi Shear
Hoist Pin Support	Bearing at Trolley Frame Bearing Area	20.0 ksi	25.4 ksi	6.37 ksi Shear
Track Rollers/Trolley Assembly				10.01 lbs. Force required to move horizontal trolley

Analysis performed to attain these parameters are shown in section D.3.2 of the appendix. A rendering of the final horizontal trolley design is shown in Figure 20.

Figure 20. Final Rendering of the Horizontal Trolley.

This component is installed on the main jib crane. It can have its width adjusted using the hoist pin nuts and the pressure pins shown on the vertical column portion. The Technical drawings depicting the final dimensions of the horizontal trolley and the total bill of materials can be found in the drawings section of the Appendix G.

3.4.2. Guide Column

The vertical guide column is what prevents the jig assembly from swaying and rotating, as it would if only supported by the vertical hoist. This vertical column is equipped with a trolley that will allow for vertical motion on the column. This trolley is where the fork will be attached that

hold the jig assembly. Design considerations for the vertical support column and the vertical trolley included the following:

- The vertical column must attach to a support plate that can be installed on the horizontal trolley. This plate must be able to withstand the stresses associated with supporting the vertical support column while itself being supported on either side by the horizontal trolley.
- The vertical column must have a handle installed on it at 4’6” from the ground. This handle will be used to push the entire assembly in and out along the main jib crane, and for rotating the entire jib crane I-beam along its support axis.
- The vertical column and its push-handle must be able to withstand the stresses associated with the pushing motions described in the previous bullet point. The vertical column must also adequately resist deflections under the same pushing forces.
- The vertical column must have an 8 in. clearance from the floor when installed on the horizontal trolley.
- The vertical trolley must be designed such that it can be assembled on the vertical column.
- The vertical trolley must have a track roller design that will prevent our fork and jig assembly from titling should it become unbalanced.
- The vertical trolley must be designed such that the fork that supports our jig assembly can be attached to it.
- The vertical column must also be able to adequately resist the stresses and bending associated with the forces from the fork on the vertical trolley, as the vertical trolley will be transferring these forces to the vertical column.

The final selections required for the design considerations listed and any related analytical results are shown in TABLE XVII.

TABLE XVII FINAL DESIGN PARAMETERS FOR THE GUIDE COLUMN

Design Consideration	Material / Description	Size / Specifications
Guide Column	• W18X21 I-Beam • CSA G40.21-44W • Yield Strength = 44 ksi •Shear Strength = 25.4 ksi	• 12 Foot 8 in. Length
Horizontal Trolley Connecting Plate	• CSA G40.21-44W • Yield Strength = 44 ksi •Shear Strength = 25.4 ksi	• 16 in. X 9 in. X 1 in. • 0.75 in. X 0.5 in. Thru Slots for wedge locating pins
Vertical Trolley	• CSA G40.21-44W • Yield Strength = 44 ksi •Shear Strength = 25.4 ksi	• 0.25 in. Thickness
Track Rollers	• Flanged Threaded Track Roller • Vendor: McMaster Carr (6318K55-Back, 3647K17 Front)	• 6318K55 2.5in. Diameter, 2,200 lb radial Capacity (ea) • 3647K17 1.5in. Diameter, 5,000 lb radial Capacity (ea)
Shank Faceplate	• CSA G40.21-44W • Yield Strength = 44 ksi •Shear Strength = 25.4 ksi	• 8 in. X 6 in. X 0.25 in. (Back) and 10 in. X 6 in. X 0.25 in (Front, wider for shank)

Analytical results relating to the vertical guide column are shown in the table below.

TABLE XVIII VERTICAL COLUMN ANALYSIS RESULTS

Scenario	Stress Type and Location	Stress Magnitude	Allowable Stress	Deflection
Jig Loaded and In Lowest Position on Guide Column	Bending Moment at top of Guide Column (Fixed to Connection Plate)	185.1 kip-in		0.99 in. at bottom of guide column
	Shear in Support Plate (supported by horizontal trolley)	1.72 ksi	25.4 ksi	0.019 in. Across support plate

Analysis performed to attain these parameters are shown in section D.3.1 of the appendix. A rendering of the final vertical column assembly is shown in Figure 21, and a vertical trolley detail rending in Figure 22.

Figure 21. Guide Column Assembly.

Figure 22. Vertical Trolley

This assembly is installed on the horizontal trolley. The horizontal trolley is put together with the vertical guide column support plate in its two side slots. Then the wedge pins shown in Figure 22 are inserted, keeping the vertical assembly snug against the horizontal assembly. Technical drawings depicting the final dimensions of the guide beam and trolley, as well as the total bill of materials can be found in the drawings section of the Appendix G. Figure 23 shows a final rendering of the assembled vertical stabilization section, with both the horizontal trolley and vertical guide column.

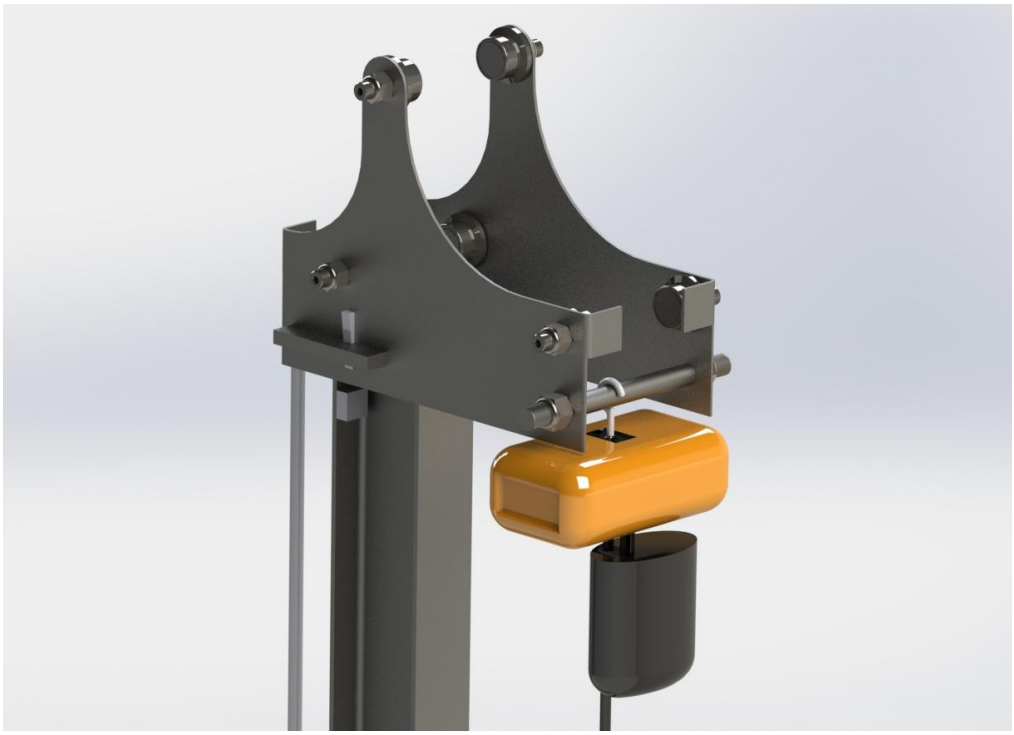

Figure 23. Vertical Stabilization Render.

3.5 Jib Crane Design

This section of the report briefly discusses the results of the jib crane design and analysis. More details can be found in appendix D.4. References in this section will be made to those additional details should the reader be interested. The jib crane portion of the design was designed as per the Crane Manufacturer's Association of America (CMAA) specification 70 [11]. This standard provided multiplying factors for the forces acting on the jib crane, as well as allowable design stresses which both contributed to an overall factor of safety for each of the three sections discussed below. The force factors considered in the project were:

- **Dead Load Factor:** Factor applied to the dead load supported by the crane. The dead load encompasses the weight of the horizontal beam on which the trolley travels and the components that mount the horizontal beam to the main mast column. The dead load factor is a function of the speed at which the horizontally travelling trolley moves.

- **Trolley Dead Load Factor:** Factor applied to the dead load supported by the horizontally travelling trolley. This dead load includes the trolley itself, the weight of the hoist and the weight of the vertical guide column. The trolley dead load factor is a function of the hoist speed.
- **Hoist Load Factor:** Factor applied to the load lifted by the hoist. The hoist lifts the weights of the vertically travelling guide trolley, the fork, the roof rotation device, the jig and the roof. The client requested that the crane be rated to lift 1,000 lbs. The heaviest roof was consequently considered to be 1,000 lbs. The hoist load factor was also a function of hoist speed.

The respective force factors and allowable stresses detailed in CMAA Specification 70 that were used in the design of the jib crane can be seen in the table below.

TABLE XIX JIB CRANE FORCE FACTORS AND ALLOWABLE STRESSES

Factor	Value	Note
Dead Load	1.1	Horiz. trolley speed <100 FPM
Trolley Dead Load	1.1	Hoist speed<100 FPM
Hoist Load	1.1	Hoist speed<30 FPM
Allowable Tensile Stress	$0.6\sigma_y$	σ_y = tensile yield strength
Allowable Compressive Stress	$0.6\sigma_y$	-
Allowable Shear Stress	$0.36\sigma_y$	-
Allowable Bearing Stress	$0.8\sigma_y$	-

The design of the jib crane was broken down into three sections. These three sections are as follows:

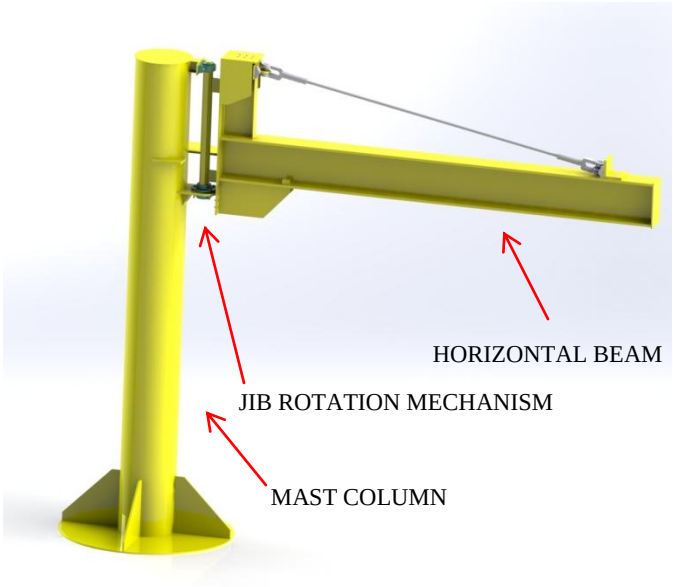

Figure 24. Jib crane assembly.

- **Horizontal beam**: the beam on which the horizontal trolley travels and it strengthening components.
- **Jib rotation mechanism**: the mechanism allowing the horizontal beam to rotate about the mast column. This section also includes the method of attaching the horizontal beam to the mast column.
- **Mast column**: the section from which the horizontal beam is cantilevered.

All three of these parts of the jib crane are discussed in the following subsections.

3.5.1. Horizontal Beam

This subsection will provide a brief overview of some of the features of the horizontal beam, as well as some of the results of its theoretical analysis. A more detailed analysis including free body diagrams can be seen appendix D.4 for the curiosity of the reader.

The features of the horizontal beam can be seen below Figure 25. Figure 25 can be used as a reference for the statements of the horizontal beam's features.

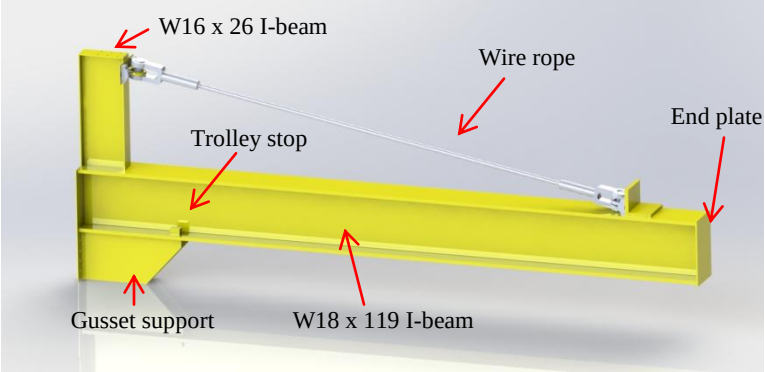

Figure 25. Horizontal beam assembly.

- The horizontal beam was made from a **W18 x 50** I-beam spanning a **total length of 196.5 inches**. The supports on the mast side of the beam and the plate at the opposite end allow the trolley **120 inches of travel**.
- The maximum theoretical deflection in the horizontal beam occurs at the end furthest from the mast column when the weight of the trolley and everything it supports is applied. This maximum theoretical deflection is **0.0275 inches downward.** This deflection was reduced using a wire rope in tension. This was the design limiting feature as CMAA specification 70 required a deflection of less than 1/888 of the beam's span [11]. As long as the actual deflection of the horizontal beam was less than 0.221 in, the beam would be acceptable. The design team errored on the side of caution in this scenario as performing a numerical analysis was outside of the scope in this project.
- The maximum tension during this theoretical scenario was **30,700 lbs**. 36 mm wire rope was used to support this tensile load.
- The upright **W14 x 22** I-beam at the mast end of the beam and the gusset supports below add rigidity to the larger W18 x 50 beam.
- The maximum tensile stress on the top flange of the horizontal beam occurs at the mast column end when the maximum trolley load is applied at the far end of the beam. The maximum tensile stress on the top flange is **0.151 ksi**.

The maximum compressive stress on the top flange occurs at the same spot, but when the maximum trolley load is applied at the closest point to the mast column. The maximum compressive stress on the top flange is **0.416 ksi**.

3.5.2. Jib Rotation

The rotation mechanism for the jib crane utilizes two bearings to rotate about the mast column. The upper floating bearing is a spherical roller bearing with a solid pillow block supporting a purely radial load. The bottom bearing is a tapered roller bearing with a flange mount supporting both radial and thrust loading. The bearings on the rotation shaft can be seen in the figure below.

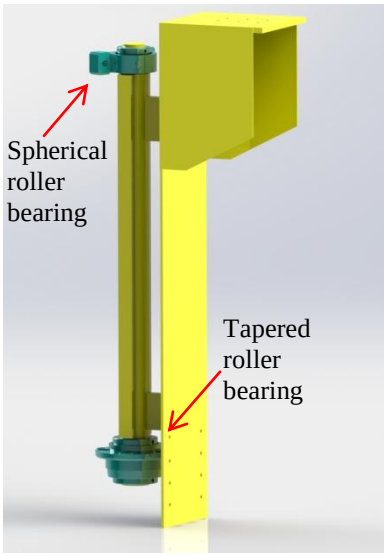

Figure 26. Jib rotation device

The jib rotation device offers the jib crane the ability to:

- rotate about the mast column
- be installed to the mast column with ease utilizing bolted connections from the housed bearings
- be an easy method for attaching the horizontal beam assembly to the mast column, again, using bolt connections

The manner in which the sections are bolted together can be seen in the figure below.

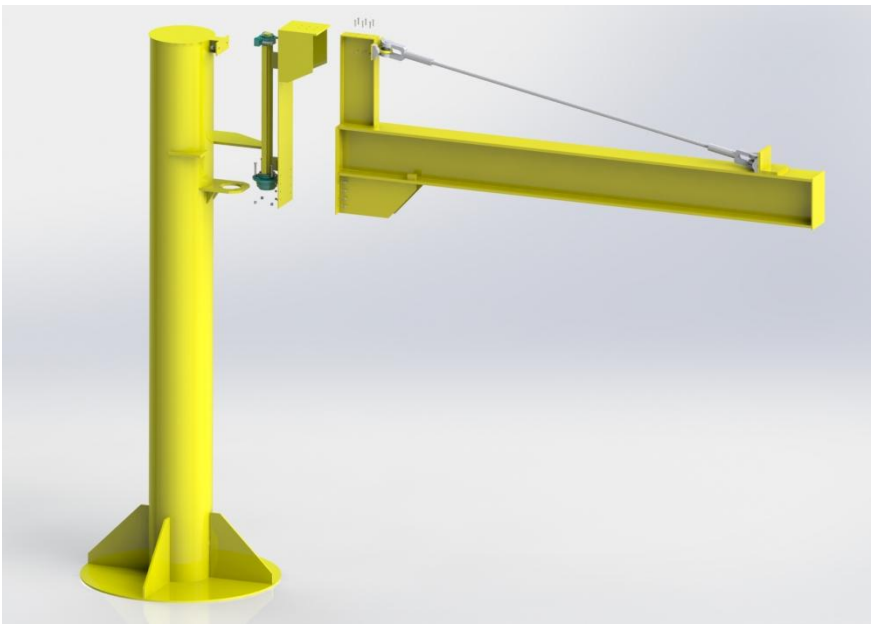

Figure 27. Exploded view of jib crane assembly.

The shaft on which the bearings ride has three sections. The shaft section contacting the upper bearing required a diameter of **2-15/16”** while the bottom bearing contact section required a diameter of **3-15/16”.** The section of the shaft between the two bearings has stiffeners in order to decrease the diameter and reduce weight. The stiffeners are **2”x1-1/4”** lengths of 1020 steel that are welded to the 1020 steel shaft, as seen in the image below. These stiffeners allowed the middle section diameter to be decreased to **4-1/4”.** The stiffeners used on the shaft can be seen I the figure below.

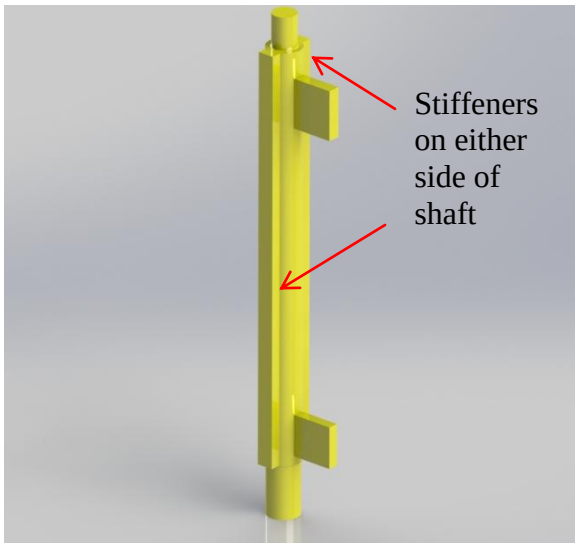

Figure 28. Stiffeners on jib crane rotation shaft.

The shaft was designed to ensure that it would not see stresses above the rated allowable stress for 1020 steel. Additionally, the scenario in which the shaft saw the least amount of stress was also considered to determine a range of stresses. The maximum and minimum shear and bending stresses in the shaft can be seen in the table below, along with the scenario in which they occur.

TABLE XX JIB CRANE ROTATION SHAFT STRESSES

Max/Min	**Scenario**	**Stress Type and**	**Magnitude**	**Allowable**

		Location		
Maximum	Maximum trolley load at far end of horizontal beam	Shear on bottom bearing contact	14.41 ksi	15.4 ksi
		Bending in middle of shaft	18.65 ksi	25.6 ksi
		Shear in top bearing contact	14.62 ksi	15.4 ksi
Minimum	Trolley load w/o roof in jig at close end	Shear in bottom bearing contact	6.692 ksi	15.4 ksi
		Bending in middle of shaft	8.538 ksi	25.6 ksi
		Shear in top bearing contact	1.971 ksi	15.4 ksi

The stress amplitudes for each of the three sections are all lower than the endurance limit of 1020 steel, which is 39.15 ksi. Furthermore, all stresses are lower than the allowable limits dictated by CMAA Specification 70. More details regarding the different scenarios that were analyzed can be seen in appendix D.4.

The minimum force required to rotate the jib crane was determined using the bearing calculator offered by SKF. A “starting torque” could be determined for each bearing by inputting data including loads, operating temperature, lubrication type, lubricant viscosity and rotation speed. The starting torque is a function of the frictional moment caused by the friction in the rolling elements and the frictional moment caused by the seals of the bearing [12]. The starting torque was then divided by the distance at which a rotational force would be applied to determine how much force was needed to rotate the jib crane. The results can be seen in the table below.

Bearing	**Radial Force (lb_f)**	**Thrust Force (lb_f)**	**Starting Moment**	**Rotational Force**

			(in·lb$_f$)	**(lb$_f$) at 38.75 in**
Upper Roller	33,220	0	110	2.839
Lower Tapered	66,020	8,662	640	16.52

The 38.75 in length was used to determine the maximum rotational force which occurs when the trolley is at the mast end of the horizontal beam. Summing the two moments yields a required rotational force of **19.36 lbs.**

3.5.3. Mast Column

The mast column was designed to be attached to the shop floor and keep the jib crane upright. The mast column is made up of the following features:

- **24 in. Schedule 80 steel pipe** that is **237.68 in. tall**
- Four **25 in. x25 in. x3/4 in. triangular gussets** around the base to provide stability and extra material to weld the mast column to a **75 in. diameter base plate**
- Mounting plates for both bearings, as well as stops to only allow the crane **90° rotation**.

A rendering of the mast column can be seen below.

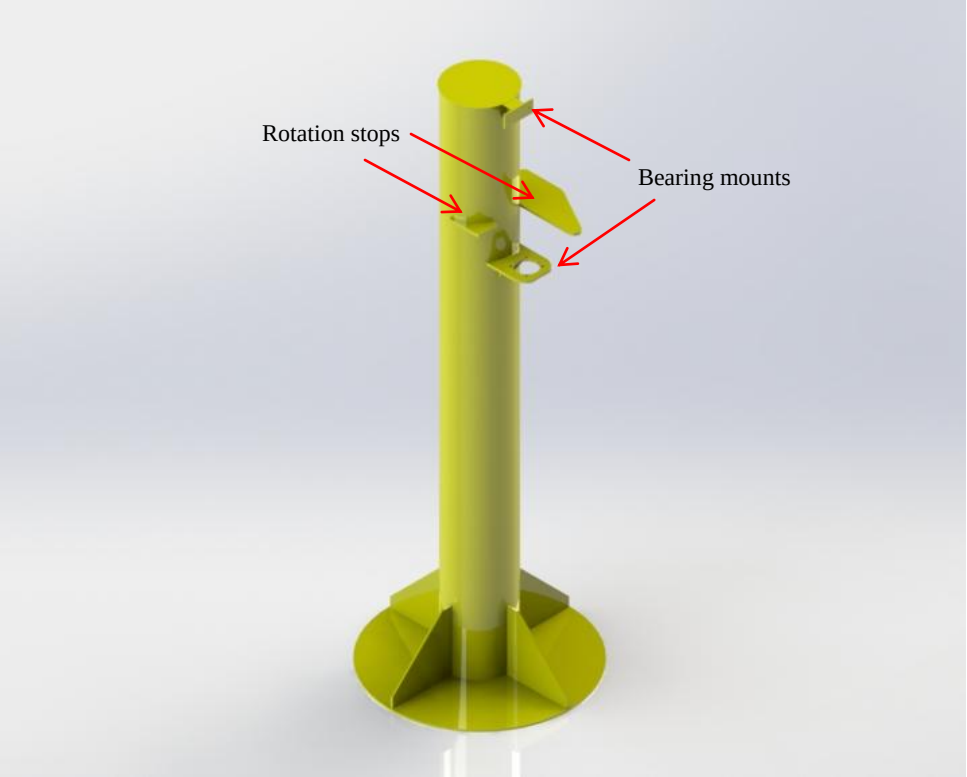

Figure 29. Mast column assembly.

The mast column was designed in such a manner that the collision of a 250 kg object travelling at 1 m/s would have little impact on the column. Considering the dimensions mentioned above for the mast column, the resultant bending stress in the mast column would be **8.738 ksi** at the base in a worst case collision situation. This worst case would be when the horizontal trolley load is loaded with the roof in the jig at the furthest point from the mast column when a projectile collides with the back side of the mast column, as seen in the figure below.

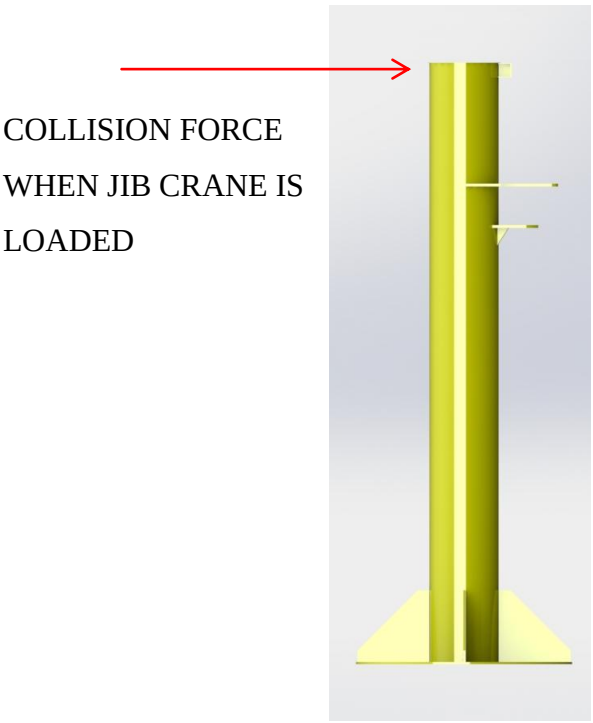

Figure 30. Mast column collision.

This scenario would produce a resulting moment of **4,157,000 in·lb** at the base and a deflection of **0.311 in** at the top of the column.

More scenarios were analyzed for all three sections of the jib crane. More detail regarding these scenarios has been included in appendix D4 as supplemental information for the reader.

4. Final Design

This section will discuss how the final design functions when all the sections are assembled, as well as how the final design meet the client's needs for the problem at hand

4.1 Overview

The three most important client needs for this project were:

- to allow one person the functionality of assembling and manipulating the roof while it is in the jig

- to allow two people the functionality of installing the completed roof a top the bungalow
- to improve the safety of the assemblers

These three needs were the underlying purpose of this project to add value to the current manufacturing process. This subsection will provide an overview of the final design and show how it satisfies these three needs. The assembled design can be seen in the figure below in its assembling position.

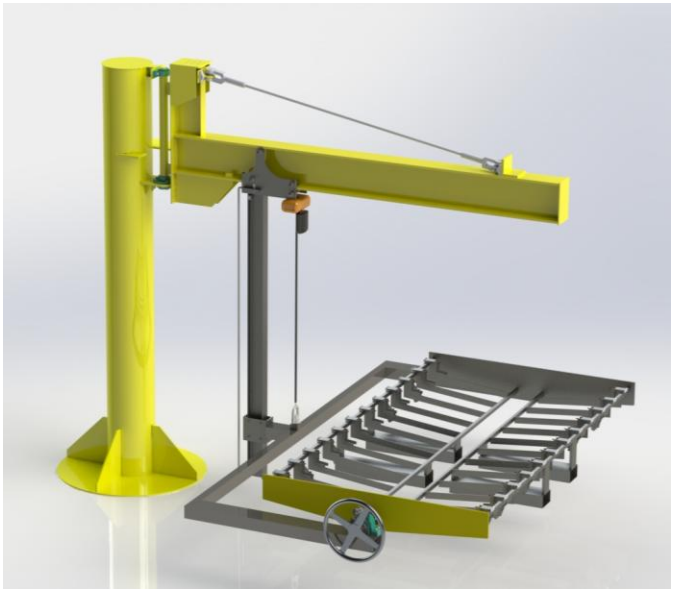

Figure 31. Jig in assembly position.

With the implementation of this design, the assembler would have the freedom to assemble the roof assembly at different heights and orientations without removing it from the jig. This will lessen the risk of the assembler being put in harm's way, while decreasing manufacturing time of the roof. Furthermore, the assembler will be required to exert minimal effort to rotate the jig with the hand wheel. This will prevent the worker from straining himself, while also not requiring an extra person to gain access to a different orientation of the roof during fabrication.

The second client need of requiring no more than two people for the final install of the roof was satisfied by the horizontally travelling trolley and roof to jig attachment method. The ability for the roof to be rolled to the top of the bungalow without removing it from the jig reduces

installation time. Moreover, the pins holding the roof in the jig are easy to remove minimizing pinch points for assemblers.

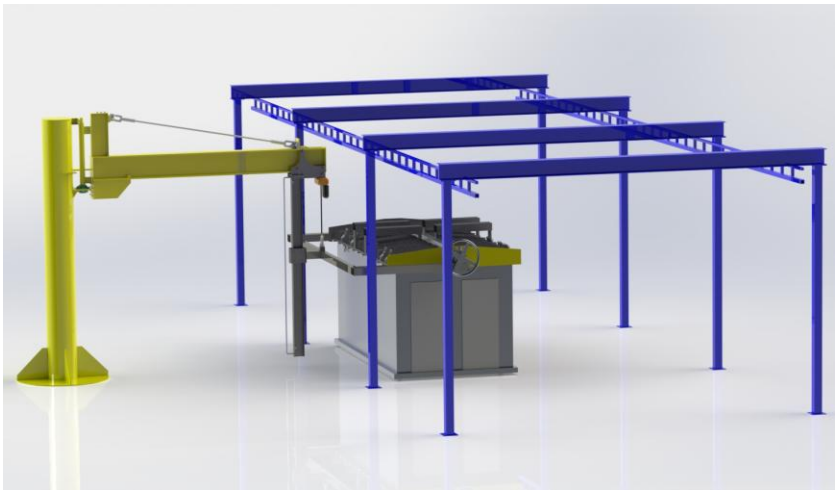

Figure 32. Final roof installation with bridge crane.

Finally, the jib crane's ability to rotate provides the client with the flexibility to perform other tasks in the area that the jig crane would occupy by moving the jig out of the way. The jig to fork flange connection also provides the client with the flexibility to change out the current jig for one with a roof of a different gable size. Alternatively, a jig for a bungalow wall could be designed to connect to the forks. These flexibility features can be seen in the figure below.

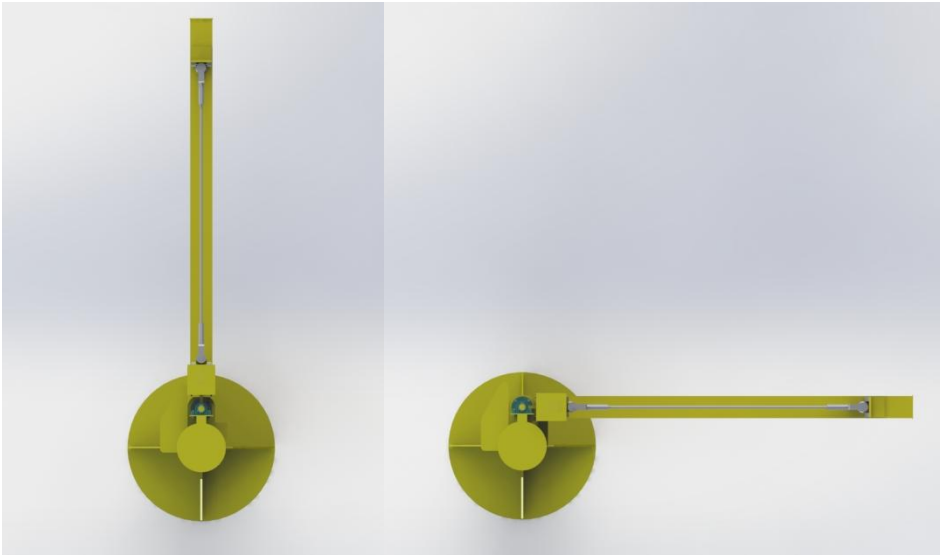

Figure 33. 90° rotation of jib crane.

The overall performance of the design can be summarized in the completed technical specification table below.

TABLE XXI FINAL TECHNICAL SPECIFICATIONS OF DESIGN

Metric #	Metric	Unit	Marginal Value	Ideal Value	Importance	Final Value
1	Loading capacity	lb	n/a	1,000	1	**1,000**
2	Force require to manually move jig	lb	<64	<50	1	**63**
3	Directions in which the roof assembly can be manipulated while in the jig	DOF	n/a	4	1	**4**
4	Articulation height range	ft	4.5-10 from floor	4-10 from floor	1	**4'6" – 10 8-3/8"**
5	Precision of articulations	cm	+/- 10	+/- 5	2	**+/- 1**
6	Adjustability	Sizes	2	4	3	**3**
7	Maximum height, at any time	ft	14	12'3"	3	**17' 5'**
8	Resistance to impact	kg·m/s	n/a	250	1	**250**
9	Cost	$ CAD	<10,000	<5,000	2	**53,000**

The only areas of concern based on the table above is cost and maximum height. The issue with the maximum height was solved by moving the articulating jig assembly outside of the bungalow cell so there would be no risk of collision between the jib crane and bridge crane. The metric of greater concern that was not met was the cost. The team misjudged the cost of material for the project. Consequently, recommendations for reducing costs going forward are made in section 4.4.

It should also be noted that the overall dimensions of the final design are 232.93 in. in regards to the overall width of the fork shafts, 241.62 in. in regards to the height of the jib crane and 386 in. in regards to the overall extended length of the jib crane. The overall width of the

fork shafts was designed to ensure that the overall width of the articulating jig design was capable of fitting within the overhead crane columns that are located over the bungalow. The overhead crane column width was 236in.

4.2 Cost

The final theoretical cost of the articulating jig is $52,833.83. The breakdown for each section of the project can be seen in the table below.

TABLE XXII COST SUMMARY

Section	Overall Cost
Jig	$11,351.14
Fork and Jig Rotation	$7,735.98
Vertical Stabilization and Horizontal Trolley	$7,363.04
Jib Crane	$26,383.67
Total	**$52,833.83**

A breakdown of the cost for each section can be seen in appendix E, while a list of every part in the design can be seen in the bill of materials in appendix F

4.3 Operation

This section will detail some key points regarding the operation of the articulating jig. The process begins by ensuring that the truss locators are outside of the jig. The 2ft roof panel sections are then placed in the jig on the jig ribs, pressed up against the vertical portion of the jig ribs. The panel must be pressed up on a specific side of the jig. In this document, one side of the jig is painted yellow, to ensure the lifting lugs align properly. A truss locator is then hinged down over the roof panel and the toggle clamp located on the element is then used to clamp the panel to the rib to prevent the panel from moving around during the assembly. After the panels are welded together, a truss locator for one 2ft panel is hinged out and the truss is placed in the

opposite truss locator. The hinged out truss locator is then hinged back in to properly locate the placed truss. The placed truss is then welded to the assembly and this process repeats for the other trusses. Once the point to assemble the lifting lugs to the roof is reached, the roof lifting lugs can be placed in the corresponding jig lifting lug, which is dependent on the roof size. The jig lifting lugs will be marked with the size of the roof they're associated with. The roof lifting lugs press up against the side and the seat of the jig lifting lugs, they are then welded to the side of the roof assembly. Once the lifting lugs are attached, the roof can be secured to the jig by inserting the jig lifting lug pin into both the jig lifting lug and roof lifting lug. The pin is held in place by the jig lifting lug pin bolt. Once the roof is secure, truss locators can be hinged away from the assembly area and fixed to the outside of the jig using the magnets on the truss locators. The roof can then be rotated once the roof is secured to the jig lifting lugs, at no point should the jig be rotated with the roof assembly in it if the roof is not secured to the jig lifting lugs.

Once the roof is placed on the bungalow and the roofs weight is supported by the bungalow, the jig lifting lug pin bolts can be removed from the jig lifting lug pins using the bolt's handle and the jig lifting lug pin can be removed. The jig can then be raised from the roof.

4.4 Recommendations

With the submission of this report, the design team wishes to put forward the following recommendations should the client wish to implement this design.

- The jig is designed for one piece truss assemblies. Should roofs be made that do not have one piece truss members, an external truss jig should be made to pre assemble the trusses prior to installation to the jig in this design.
- This analysis was purely analytical. Prior to erection of the design, FEA analysis should be done on the following sections considering the following scenarios:
    - Torsion should be analyzed in the horizontal beam in the event of an off centered load.
    - Torsion in the vertical guide beam should also be considered for off centered loads.
    - The mast column and horizontal beam could have some weight reduced with more in numerical optimization. The analytical analysis has errored on the

side of caution to ensure functionality. In order to reduce costs, material can be shed.

- Once the crane has been erected, a load test should be done to validate its capacity. The jig is to be rated for 1,000 lbs. Therefore, 125% of the load (1,250 lbs) is to be spread out through the jig and the deflection of the crane is to be measured. The deflection at the end of the horizontal beam should not exceed 0.0289 in. This load test is as per CMAA specification 70 [11].
- The jib crane should be painted a high visibility colour, such as yellow, to make it visible for people passing by in the production area. A 1,000 lb capacity sticker should also be affixed to the jig once the jib crane has been successfully load tested. Locations where pinch points are present should also be made visible by using designating stickers.
- The bearings that allow the jib crane to rotate are rather expensive. In order to reduce costs, creating a non-rotating jib crane could save a significant amount of money.
- By relocating the lifting lugs and truss locations on the different size roofs, multiple roof sizes can be easily manufactured in the jig presented in this report. Modify roof lifting lug locations and roof truss locations on roof assembly drawings to align with locations specified on jig. Locations can be seen on preliminary engineering drawings in Appendix G.
- The design team did not investigate the specifics regarding the concrete around the bungalow cell as anchoring of the jig design to the floor was outside of the scope of this project. When the time comes to anchor the jig design to the concrete, it should be noted that the resulting moment at the base of the jib crane mast is 4,157,000 in·lb. Considering that moment and two concrete anchors taking the load (at a time) 3 in from either extremity, as seen in the figure below, the anchors should be rated for loads of at least 60, 250 lbs.

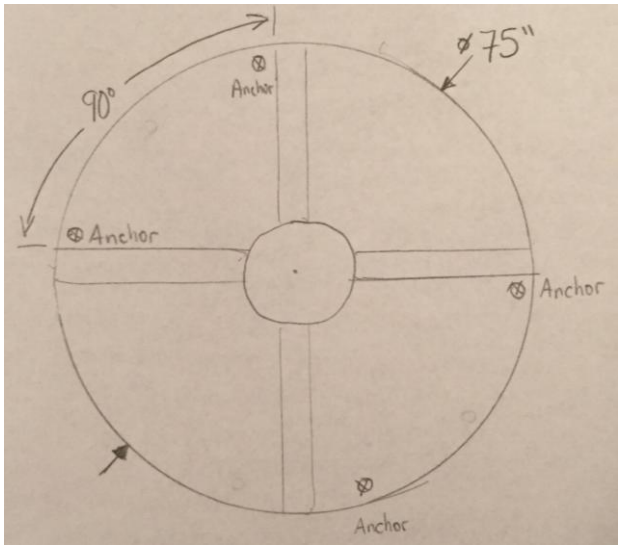

Figure 34.Suggested anchor positions.

This required load could be decreased by adding in more anchors. Four anchors were used in this theoretical scenario to account for different positions of the jib crane during rotation.

5. Conclusion

Modern Manufacturing Ltd. currently has difficulty with the assembly process for the roof of their rail side bungalows. To improve their process, an articulating jig was designed to allow easy access for one fabricator to work on the roof assembly and two workers at most to move the roof assembly to fix the roof to the bungalow.

Several overall layout concepts were generated, as well as concepts for the varying motions required by the design. Concepts were eventually selected to proceed with after rigorous concept screening and scoring. The concept that was selected to proceed forward with was the jib crane design that uses motorized rollers on a linear guide for in and out motion and a power winch for up and down motion. The roof assembly is anchored to the jig using lifting lugs and the jig rotates using a shaft on both sides of the jig. The jib crane also pivots around the mast column, as per client's request midway through the project. Using this concept, the group began detailed analysis.

The final design was ultimately designed to use a jib crane and a horizontal trolley to move the roof assembly back and forth. A vertical guide column which uses a trolley is installed on the horizontal trolley. The vertical trolley is where the roof jig and roof assembly are attached, and it is moved up and down using a 6,600 lb capacity hoist hanging from the horizontal trolley. The final design makes it possible for one worker to assemble the roof using the jig and it's rotating capabilities, while only one additional worker will be required to assist in placing the roof on top of the bungalow. The design also fits within the size constraints of the overhead crane above the bungalow. We were unable to remain within our budget of $10,000 CAD, with a final cost just shy of $53,000. This was due to the large amount of stock material that must be purchased to fabricate the design in order to meet the loading requirements. The lesson learned from missing this target is that our team should of challenged the client's budget after research and learning that it was unattainable. If Modern Manufacturing would like the cost reduced it is recommended to remove some of the requirements for the design so that less expensive components can be used. It is also recommended that a Finite Element Analysis be performed on the design components prior to construction for analysis in torsion.

Bibliography

[1] Modern Manufacturing, "Bungalow Stuff," [Online].

[2] Dan Pashniak, "88B-R001-A," unpublished.

[3] Dan Pashniak, "812B-R001-A," unpublished.

[4] Dan Pashniak, "816B-R001-A," unpublished.

[5] *Safety Code for Material Hoists*, CSA Standard Z256, 1987.

[6] Brunswick Steel. (n.d.). *Reference Catalogue* [Online]. Available: SALES@BRUNSWICKSTEEL.COM. [Accessed 4 December 2017].

[7] efunda. (2017). *ASTM A366* [Online]. Available: http://www.efunda.com/materials/alloys/carbon_steels/show_carbon.cfm?ID=ASTM_A366&show_prop=all&Page_Title=ASTM%20A366. [Accessed 4 December 2017].

[8] The Engineering ToolBox. (n.d.). *Steels - Endurance Limits and Fatigue Stress* [Online]. Available: https://www.engineeringtoolbox.com/steel-endurance-limit-d_1781.html. [Accessed 4 December 2017].

[9] The Engineer ToolBox. (n.d.). *Modulus of Rigidity* [Online]. Available: https://www.engineeringtoolbox.com/modulus-rigidity-d_946.html. [Accessed 4 December 2017].

[10] R. L. Mott, *Machine Elements in Mechanical Design*, 5th ed. Upper Saddle River: Pearson, 2014.

[11] Crane Manufacturers Associtaion of America, "CMAA Specification 70," 2010.

[12] SKF Bearing (n.d). *Bearing Friction, Power Loss and Starting Torque* [Online]. Available: http://www.skf.com/caribbean/products/bearings-units-housings/principles/bearing-selection-process/operating-temperature-and-speed/friction-powerloss-startingtorque/index.html. [Accessed 28 November 2017].

Appendix A – Supplemental Metric Information

Figure #	Heading	Page #
A1	Visual representation of the three degrees of freedom.	65

In table IV, nine metrics were defined to describe the success of the final design based on the client's needs. The explanations of how these metrics fulfill every need and the justifications for their levels of importance are summarized in the following list.

Metric #1 – Loading Capacity

- The jig will be rated to support 1,000 lbs at any orientation.
- The rating of 1,000 lbs encompasses the weight of the largest roof (16' x 8' – approximately 600 lbs), plus the additional weights of an assembler and the force an assembler may have to exert to move the jig.
- The jig structure will be designed to support 2,000 lbs and its own weight, as per clause 4.1.2.2 in CSA-Z256-M87 [13].
- *CSA –Z256-M87: Safety Code for Material Hoists* will be referenced going forward for design factors used on the mechanical components that will allow the jig to articulate.
- This metric was given the highest priority level because it satisfies client need three. The load rating will guarantee the safety of the assembler, so long as the jig is not overloaded.

Metric #2 – Force Required to Manually Move the Jig

- The assembler will never have to exert more than 50 lbs of force to maneuver the roof assembly while it is in the jig.
- Less than 45 lbs was chosen as an ideal amount of force to exert. This was done to account for wear in components that permit movement, such as bearings. This wear would develop over the lifetime of the design.

- This metric was given the higher importance rating as it defines client need number one. The less amount of force exerted by the assembler, the more ergonomic the design. The more ergonomic the design, the more willing the assemblers will be to use it.

Metric #3 – Movement of the Roof Assembly Jig

- This roof assembly will have the ability to move in three degrees of freedom when in the jig.
- The three DOF with which the jig will be designed to move are the in the y and z direction, as well as rotate about a line running parallel to the x-axis. These directions are as per figure A1.

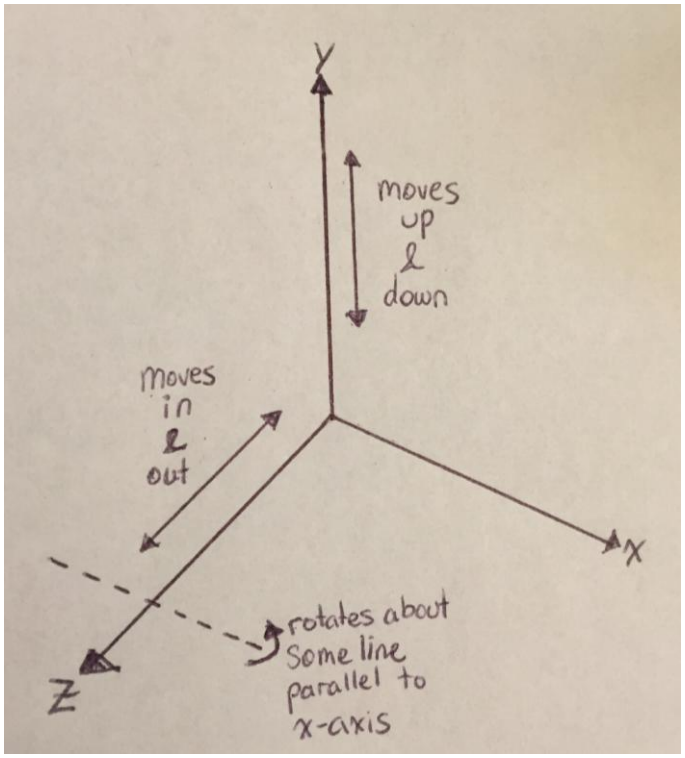

Figure A1. Visual representation of the three degrees of freedom.

- This metric was given the highest importance rating because it determines the ability to ergonomically assemble the roof assembly at different positions (client need one).

Furthermore, this metric will allow the installation of the assembly while still attached to the jig (client need two).

Metric #4 – Articulation Height Range

- The jig will be able to articulate in such a manner that it can deposit the roof assembly atop the different bungalow assemblies which stand 8-10’ high.
- The design goal for this metric is to design the top end of the articulation height range to be greater than 10’ from the bottom of the bungalow assembly.
- The top end height range will satisfy client need two because the top end height of the articulation will provide the functionality to install the roof while still attached to the jig.
- The low end of the articulation range will be designed for an assembler that is 5’6” tall to be able to work comfortably while standing. This height was given to the team as the average height of Modern Manufacturing’s assemblers. The team measured multiple work benches and counter tops and found that 3’ would be a comfortable working height.
- The low end height range will satisfy client need one because one person will have access to the roof assembly at the appropriate working height.

Metric #5 – Precisions of Articulations

- A marginal value of +/- 10 cm was provided by the client.
- The team will aim for an ideal value of +/- 5 cm to ensure that two people will have no trouble installing the roof to the bungalow. Furthermore, the team wanted to mitigate the risk of having to use tools such as pry bars and hammers to move the roof into the correct location as it would lengthen the cycle time.
- The precision of the articulations will facilitate the final installation of the roof to the bungalow. This metric also satisfied the second client need. It was for this reason that this metric was given a medium importance rating.

Metric #6 – Adjustability

- This metric was created in order to satisfy the seventh client need; the jig must be adjustable.
- The jig will ideally be adjustable for four sizes of roof assemblies (4’x6’, 8’x8’, 8’x12’ and 8’x16’).
- This metric was given a medium importance as the client was mainly looking for the articulation motion of the jig.

Metric #7 – Maximum Height at any Time

- The jig will operate inside the bungalow cell. There is a bridge crane located in this cell. Therefore, the jig assembly must never come in contact with it.
- The bottom of the bridge is 14’ from the ground. This is the marginal value.
- The height of the bottom of the hook at the hook’s highest position is 12’ 3”. This is the ideal maximum height.
- This ideal value was assumed to not be overly complicated to achieve. Therefore, it was given a lower level of importance.

Metric #8 – Resistance to Impact

- The jig must be functional in an industrial environment and may strike or be struck by another piece of equipment.
- The client stated that the jig assembly must be resistant to an impact with a linear momentum of 250 kg·m/s (a 250 kg object traveling at 1 m/s).
- This metric satisfied the fifth client need of being sufficiently robust for their work environment.

Metric #9 – Cost

- The client’s top end budgetary constraint was $10,000.
- $5,000 was provided as an ideal value because it was the original value provided by the client.

This metric was used to satisfy the client's need of remaining within their budget. This metric was given a medium because safety and functionality will be the main concerns throughout the design phase.

Appendix A References

[13] Canadian Standards Association, "Safety Code for Material Hoists," 1987.

Appendix B – Descriptions of Generated Concepts

Figure #	Heading	Page #
B1	Boom Lift	70
B2	Jib Crane	72
B3	Overhead Conveyor System	72
B4	Rack and Roller Pinion	73
B5	Ball Screw Cutaway	74
B6	Belt Driven Linear Actuator	75
B7	Motorized Rollers on a Linear Guide	76
B8	Power Winch	78
B9	Shafts on Both Sides of Jig	79
B10	Motor Chain System	80
B11	Rotatable Wrist with Motor	81
B12	Hydraulic Arm on Excavator	82
B13	Rigging Cable with Stopper	83
B14	Clamping Force on Facia	84
B15	Scissor Clamp	85
B16	Vacuum Lift	86
B17	8’ x 12’ Roof Example	87

This section will show the specific details regarding the concepts list in section 2.2. These details will be broken into the same sections as they were shown in section 2.2. They are as follows:

- Section B1 will detail the overall layout.
- Section B2 will detail the in and out concepts.
- Section B3 will detail the up and down concepts.
- Section B4 will detail the rotation of the roof in the jig concepts.

- Section B5 will detail the roof to jig anchoring concepts.

Information for how these concepts were screened and narrowed down can be seen in Appendix C.

B1. Overall Layout

The first system analyzed was the “Boom Lift”, shown in figure B1Figure.

Figure B1. Boom Lift [14]

The next system our team took inspiration from was a Jib-Hoist system, shown in figure B2.

Figure B2. Jib Crane [15].

Finally our team looked at overhead conveyor systems, shown in figure B3

Figure B3. Overhead Conveyor System [16]

After analyzing each of these designs, our team set out to design similar systems that would be a fit for our needs. Our team ended up putting together four overall layout designs to be screened and ranked against each other. The “Jig” in each of the following concept sketches is assumed to be the same fixture, and is independent of overall design. The first overall layout concept is the "Boom Lift” design.

B2. In and Out

Using the internal and external concept generation strategies mentioned in the methodology we were able to develop several concepts to move the jig horizontally. The concepts that were generated to move the jig assembly in and out were a hydraulic cylinder, pneumatic cylinder, rack and pinion, screw linear actuator, belt or chain, rollers on a linear guide or rollers on a linear guide.

In and Out 1: Hydraulic Cylinder

The hydraulic cylinder concept would use a hydraulic cylinder to drive a trolley in and out on a linear guide or pivot the arm members about a pivot point. Both options would hold the roof and jig assembly in some manner discussed in later sections. The advantages and disadvantages of using hydraulic cylinders for this application can be seen below.

Advantages

- Precise articulations of the cylinder
- Hydraulic fluid is considered incompressible
- Easy to operate.
- Reliable

Disadvantages

- Would require many other components (valves, pump, reservoir if open circuit, conductors)
- Hydraulic systems are not the most efficient energy source.

In and Out 2: Pneumatic Cylinder

The pneumatic cylinder is very similar to the hydraulic cylinder. It would work in the same manner except it would use compressed air to move the piston of the cylinder. The advantages and disadvantages of the used of pneumatic cylinders can be seen below.

Advantages

- More precise than a hydraulic cylinder
- Easy to operate.
- Very reliable

Disadvantages

- Would require many other components (valves, conductors)
- Air is compressible

- Existing compressed air system could be utilized

In and Out 3: Rack and Pinion

The rack and pinion concept works by using a rack or linear gear, a pinion or circular gear and a motor driving either one of them. For our concept, the pinion will be powered by the motor which will move a trolley back and forth along the rack creating the necessary linear motion. There are different variations of the pinion that can be used but the group will use the roller pinion for this concept which minimizes backlash and friction [17]. An illustration of a rack and pinion can be seen in figure B8.

Figure B4. Rack and Roller Pinion [18]

Advantages

- Good for travelling long distances
- Cost effective.
- Compact.
- Reliable

Disadvantages

- Requires continuous lubrication for slower speeds [17].
- Will only be advantageous for horizontal directions of travel. Any up and downs will require larger motor to drive the pinion.

In and Out 4: Linear Screw Actuator

The screw linear actuator concept involves mechanically rotating a screw that then moves a nut on the screw linearly back and forth [19]. The articulating jig system would be attached to this nut. There are two variations of this system: lead screw and ball screw. The lead screw involves threads in the screw and nut to create linear motion. The ball screw on the other hand has a screw with threads but the ball nut contains small balls bearings that roll in the threads between the nut and screw. The group chose to proceed forward with the ball screw as it provides significantly less friction than the lead screw. An illustration of a ball screw can be seen in figure B9.

Figure B5. Ball Screw Cutaway [20]

Advantages

- Simple
- Reliable
- Compact
- Easy to control
- High efficiency, higher than a pneumatic or hydraulic cylinder [21]

Disadvantages

- High initial cost
- Limited in length, around 120 inches, as screw begins to encounter bending vibrations [22]
- Requires lubrication [22]

In and Out 5: Belt/Chain Linear Actuator

The belt/chain linear actuator concept works similar to a conveyor belt system, the belt or chain translate rotary motion from pulleys on either end of the path into linear motion [23]. A pulley would be rotated by a motor. The vertical portion of the jig would then be fixed to the belt or chain with bearings on it so it could roll or slide along a linear guide. The decision between belt or chain would depend on further analysis of the forces involved. An illustration of a belt driven linear actuator can be seen in figure B10. The advantages of a belt driven linear actuator are that it is suited to long distances of travel unlike screw linear actuators [23]. Though it is important that you properly tension the belt as the distance increases. It also provides similar benefits to the screw linear actuator as it's relatively compact, simple and there isn't a significant amount of maintenance required. It also has similar disadvantages to the screw linear actuator has it has a high purchase cost and the linear guide also needs to be lubricated. As well, belt drives will lose tension and will need to be re-tensioned every now and again.

Figure B6. Belt Driven Linear Actuator [24]

Advantages

- Suited for long distances of travel [23]
- Reliable
- Compact
- Easy to control
- High efficiency
- Simple

Disadvantages

- High initial cost
- Belt requires proper tensioning
- Requires lubrication [23]

In and Out 6: Rollers on a Linear Guide

The rollers on a linear guide is a concept that involves distributing the weight of the jig onto rollers to lessen the force required to push the articulating jig. These rollers would be on a linear guide that would guide the jig to the bungalow. It was first considered that the jig could just be pushed manually by a worker but after further consideration it was determined that this wasn't a good design. A specially designed handle would be required to push the jig that would be offset from the bungalow and would be able to extend in length to account for the height changes experienced by the jig. The additional cost, additional size and added complexity to the design lead us to remove the concept of pushing the jig manually before the concept screening stage. We did consider the concept of motorized rollers on a linear guide though.

In and Out 7: Motorized rollers on a Linear Guide

The motorized rollers on a linear guide or a motorized trolley concept is the same as rollers on a linear guide except the motion of the rollers would be motorized. The rollers would roll on a linear guide, such as an I-beam, like seen in figure B11. This design is similar to the linear actuators as it converts rotary motion into linear motion.

Figure B7. Motorized Rollers on a Linear Guide [25]

Advantages

- Simple
- Reliable
- Compact
- Easy to control
- High efficiency

Disadvantages

- Motor cannot be fixed to one location

In and Out 8: Chain and Gear System

The chain & gear system concept would involve a set of gears that would reduce the force required to push or pull the articulating jig by using a sufficient gear ratio. A chain would be attached to the articulating jig and the necessary gears. While the chain would hang down to allow a factory worker to be able to pull upon it at two different points, similar to how curtains work. The advantages and disadvantages to this design can be seen below.

Advantages

- No motor so less cost and maintenance

Disadvantages

- Would need multiple gears to meet necessary gear ratio
- Would need a significant amount of chain
- High maintenance
- Less reliable than other concepts
- Less precise than other concepts

All of these concepts that were generated besides the manual roller motion on a linear guide were then carried forward to the concept screening stage of the concept process.

B3. Up and Down

As the up and down motion is similar to the in and out motion, some concepts described in section 6.3 will also be included in the screening and scoring for up and down. These cross over concepts are: hydraulic cylinder, rack and pinion, linear actuator (ball screw), and linear actuator

(belt/chain). Only two additional mechanisms will be introduced that may be used for our up and down motion, the first being a hand winch.

Up and Down 1: Hand winch

The hand winch works by translating rotational motion into linear motion. To do this a cable or wire is wound around a spool, causing linear motion to any object attached to the cable. When mounted for vertical motion, these can also be referred to as “Hoists”. The advantages and disadvantages for this design can be seen below.

Advantages

- Low cost
- Compact

Disadvantages

- Need multiple gears to reduce force required to operate
- Requires labour
- Requires guides to prevent swaying

Up and Down 2: Motorized Winch

The power winch uses a motor to rotate the spool. Figure B12 shows a power winch.

Figure B8. Power Winch [26].

Advantages

- Simple
- Precise

Disadvantages

- Requires guides to prevent swaying

B5. Rotation of Roof in Jig

The rotation section of the design will include how to rotate the roof during the assembly process. The roof will be held upside down at first for assemblers to complete the assembly, then the assembled roof will be rotated 180 degrees and lifted up to be placed on the top of the bungalow. There are total of four rotation methods for the preliminary concepts. These concepts are a shaft on both sides, rotatable wrist, hydraulic arm and rigging cable with stopper.

Rotation 1: Shaft on both sides

The first preliminary concept is a shaft on both sides. The box container, which represents the jig and roof assembly, has a shaft on both sides that are connected to a fork as shown in figure B13. The jig and roof assembly can be rotated by a motor-chain system, as shown in figure B14 or it could be rotated by hand.

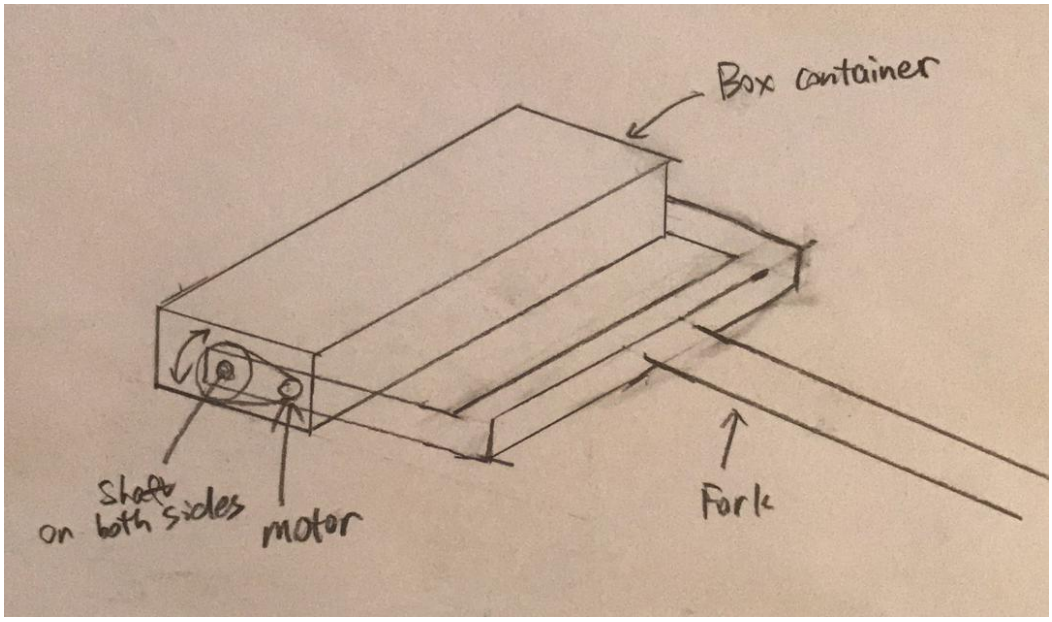

Figure B9. Shafts on Both Sides of Jig

Figure B10. Motor Chain System [27].

Advantages

- Simple
- Allows for 360 degree motion
- Allows for easy installation

Disadvantages

- Takes up significant space

Rotation 2: Rotatable Wrist

The second preliminary concept is the rotatable wrist. For this design, the jig is attached to a rotatable joint that is driven by a motor. With the rotation of the wrist, the roof can be rotated 180 degrees.

Figure B11. Rotatable Wrist with Motor [28].

Advantages

- No labour

Disadvantages

- Limited range of motion
- Requires significant space

Rotation 3: Bell Crank

The third preliminary concept is the bell crank. It's the same idea as the motion of an excavator arm, as shown in figure B16. With the motion of the hydraulic cylinder, the roof can be rotated.

Figure B12. Hydraulic Arm on Excavator [29].

Advantages

- Capable of high loads

Disadvantages

- High initial cost
- Limited range of motion

Rotation 4: Rigging Cable with Stopper

The last preliminary concept is a rigging cable with stopper as shown in figure B17. There is a stopper to hold the roof and several rigging cables are attached to the jig that holds the roof. Tightening and releasing the cable can rotate the roof.

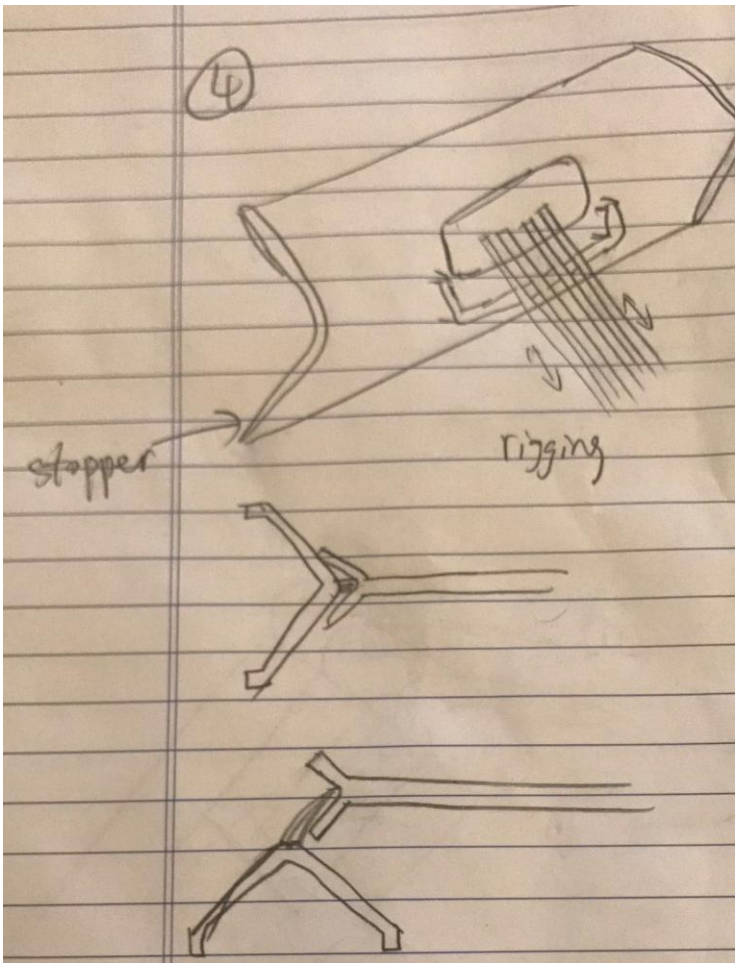

Figure B13. Rigging Cable with Stopper.

Advantages

- Rotating motion performed by gravity

Disadvantages

- Not precise
- Not easy to control

B5. Roof to Jig Anchoring Methods

Five preliminary concepts were considered after performing research and brainstorming. These five concepts were bench vise, scissor clamp, vacuum lift, multiple tensioned clamps and the utilization of the lifting lugs. Their respective details are shown below.

Anchoring 1: Bench Vise

The first concept for holding the roof assembly in place was to apply a clamping force to the facia of the roof assembly as seen in the figure below. The clamping method for this design would use something similar to a bench vise from a work shop. The threaded rod used to tighten the jaws would be located on the peak side of the roof. To conserve space, a removal handle or torque wrench could be used to apply or release the clamping force.

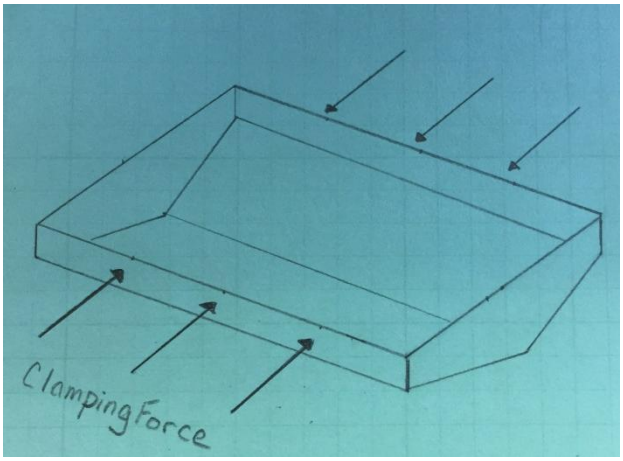

Figure B14. Clamping Force on Facia.

Advantages

- Underside of roof assembly free of obstructions

Disadvantages

- Clamping force required may vary over time
- Rely on friction to hold
- Risk of bending roof assembly
- Risk of falling
- Needs to be regularly maintained

Anchoring 2: Scissor Clamp

Similar to the bench vise concept, the scissor clamp concept relied on clamping force acting against the facia on the roof. The scissor clamp idea was taken from the American Society of Mechanical Engineers (ASME) standard for Below the Hook Lifting Devices [5]. The scissor

clamp concept would resemble figure B19. For this concept to work, an independent tensioning device would be required to simulate the hook seen in figure B19. The tensioning device would need to be independent so that the roof and jig could rotate without the clamping force being released.

Figure B15. Scissor Clamp [5].

Advantages

- Underside of roof assembly free of obstructions

Disadvantages

- Clamping force required may vary over time
- Rely on friction to hold
- Risk of bending roof assembly
- Risk of falling
- Needs to be regularly maintained

Anchoring 3: Multiple Toggle Clamps

Another concept based around applying clamping force to the facia of the roof assembly was to use multiple toggle clamps along the length of the roof. The toggle clamps would be applied once the trusses were welded to the roof to again prevent buckling of the roof panel. The

assembler would apply each toggle clamp once prior to rotation then disengage each clamp after the roof is in position. The advantages and disadvantages of this design can be seen below.

Advantages

- Underside of roof assembly free of obstructions

Disadvantages

- Clamping force required may vary over time
- Rely on friction to hold
- Risk of bending roof assembly
- Risk of falling
- Requires clamps to be individually clamped and unclamped

Anchoring 4: Vacuum Lift

The vacuum lift concept was also found using the Below the Hook standard [5]. The vacuum lift would utilize suction cups and a vacuum system to hold the roof in the jig during rotation and installation. Once positioned correctly, the vacuum system would be shut off, releasing the roof from the jig. The vacuum lift would resemble the following.

Figure B16. Vacuum Lift [5].

Advantages

- Underside of roof assembly free of obstructions
- No risk of bending assembly

Disadvantages

- Expensive, $13,000-15,000 [30]
- Risk of losing suction
- Risk of falling
- Needs to be regularly maintained

Anchoring 5: Lifting Lug Utilization

The final preliminary concept that was considered was to pin the roof to the jig using the lifting lugs that are welded to the roof assembly. The lifting lugs that are welded to the roof can be seen in the figure below. When the roof was positioned correctly, the pins would be removed. There would be four lifting lugs on each roof section.

Figure B17. 8’ x 12’ Roof Example [31].

Advantages

- Underside of roof assembly free of obstructions
- Simple
- Does not rely on clamping force

Disadvantages

- One or more pins could bind on final installation and require a hammer to remove
- Require locating elements

B6. Appendix B References

[5] *Below the Hook Lifting Devices,* ASME Standard B30.20, 1999.

[14] Direct Industry. (2017). *Trailer-mounted articulated boom lift /electric.* [Online]. Available: http://www.directindustry.com/prod/genie/product-9218-654093.html#product-item_52544, n.d [Accessed 19 October 2017].

[15] Direct Industry. (2017). *Pillar jib crane.* [Online]. Available: http://www.directindustry.com/prod/abus/product-14275-542892.html [Accessed 19 October 2017].

[16] Fives Group Automation. (2017). *CFC Overhead Conveyor*. [Online]. Available: http://automation.fivesgroup.com/products/conveying/overhead-conveyors/cfc-overhead-conveyor.html [Accessed 19 October 2017].

[17] Nexen Group. (2011). *The Roller Pinion System* [Online]. Available: http://www.nexengroup.com/files/press_releases/68_21262.pdf [Accessed 17 October 2017].

[18] L. Eitel. (2015, May. 8). *What are Rack-and-Pinion Sets? Technical Summary* [Online]. Available: http://www.motioncontroltips.com/rack-and-pinion-sets/ [Accessed 17 October 2017].

[19] T. Kliber. (2016, Aug. 2). *Picking the Right Linear Positioning Device* [Online]. Available: https://www.design-engineering.com/features/linear-positioning-device/ [Accessed 17 October 2017].

[20] Barnes Industries, Inc.. (n.d.) *How a Ball Screw Works* [Online]. Available: http://www.barnesballscrew.com/how-a-ball-screw-works/ [Accessed 17 October 2017].

[21] A. Dietrich. (2017). *High-Force Linear Motion: How to Convert from Hydraulic Cylinders to Electric Actuators and Why* [Online]. Available: https://www.tolomatic.com/info-center/resource-details/convert-from-hydraulic-cylinders-to-electric-actuator [Accessed 17 October 2017].

[22] D. Collins. (2014, Sept. 23). *Five Things to Consider When Choosing a Linear Actuator* [Online]. Available: http://www.linearmotiontips.com/ five-things-consider-choosing-linear-actuator/ [Accessed 17 October 2017].

[23] B. Bartos. (2015, Mar. 2). *Strengths & Limitations: Belt Drive vs. Ball Screw Actuators* [Online]. Available: http://blog.misumiusa.com/ strengths-limitations-belt-drive-vs-ball-screw-actuators/ [Accessed 17 October 2017].

[24] Macron Dynamics, Inc.. (2017). *Belt Driven Actuators* [Online]. Available: http://www.macrondynamics.com/belt-actuators [Accessed 17 October 2017].

[25] Grianger. (2017). *Motorized Trolley, 2400 lb. Load Capacity, 3 Phase, 380/480 Voltage* [Online]. Available: https://www.grainger.com/product/DEMAG-Motorized-Trolley-34A062 [Accessed 17 October 2017].

[26] Whitworths. (2017). *Electric Trailer Powerwinch 912* [Online]. Available: https://www.whitworths.com.au/electric-trailer-powerwinch-912 [Accessed 19 October 2017].

[27] S.S. Choppers. (2017). *Open Chain Primary Tech Cycle 5/6-Speed Chain Drive System with Clutch* [Online]. Available: http://www.sevensinschoppers.com/5_6_speed_Chain_Drive_System_BOBBER_SHOP_DESIGN_p/tc-chain-open.htm. [Accessed 20 October 2017].

[28] R. Inc. (2017). *Lynxmotion Wrist Rotate Upgrade (Heavy Duty)*. [Online]. Available: http://www.robotshop.com/en/lynxmotion-heavy-duty-wrist-rotate-upgrade.html. [Accessed 20 October 2017].

[29] Dreamstime. (n.d.). *Yellow excavator arm.* [Online]. Available: https://www.dreamstime.com/royalty-free-stock-photography-yellow-excavator-arm-image3851357. [Accessed 20 October 2017].

[30] D.Testa. (2017, Oct. 11). RE. "Final Year Mechanical Engineering Project." Personal e-mail.

[31] Modern Manufacturing Limited. "*812B-R001-A, 8x12 Roof Assy".* [Technical Drawing]. (2017).

Appendix C – Concept Screening and Scoring Results

Table #	Heading	Page #
C1	CONCEPT PRELIMINARY SCREENING EXAMPLE	93
C2	CRITERIA IMPORTANCE ANALYSIS EXAMPLE	94
C3	COMPLETED CRITERIA IMPORANCE MATRIX	95
C4	WEIGHTED SECLECTION MATRIAL EXAMPLE	96
C5	OVERALL LAYOUT SCREENING MATRIX	98
C6	OVERALL LAYOUT CRITERIA WEIGHTING MATRIX	99
C7	OVERALL LAYOUT CONCEPT SCORING	100
C8	C8 UP AND DOWN SCREENING	101
C9	UP AND DOWN CRITERIA WEIGHTING MATRIX	102
C10	UP AND DOWN CONCEPT SCORING	103
C11	IN & OUT CONCEPT SCREENING	104
C12	IN & OUT CRITERIA WEIGHTING MATRIX	105
C13	IN & OUT MOTION CONCEPT SCORING	106
C14	C14 ROTATION SCREENING	107
C15	ROTATION CRITERIA WEIGHING MATRIX	108
C16	ROTATION CONCEPT SCORING	109
C17	ROOF ANCHORING PRELIMINARY SCREENING	110
C18	ROOF ANCHORING CRITERIA WEIGHTING	111
C19	ROOF ANCHORING SCORING MATRIX	112

This section will show the specific details regarding the concept selection process in section 2. The sections will be broken up as follows:

- Section C.1 will detail the concept selection methodology.
- Section C.2 will show concept selection tables for the overall layout concepts.
- Section C.3 will show concept selection tables for the up and down concepts.
- Section C.4 will show concept selection tables for the in and out concepts.
- Section C.5 will show concept selection tables for the rotation of the roof in the jig concepts.
- Section C.6 will show concept selection tables for the roof to jig anchoring concepts.

C.1 – Methodology

C.1.1 - Screening

A preliminary screening was performed to narrow down the number of options. This screening was done using a comparative analysis. One concept was used as a bench mark. Each concept was compared to the benchmark based on specific criteria. Each criterion was given a +, – or 0 compared to that quality of the benchmark concept. The sums of the +'s, -'s and the 0's were tabulated and used to rank all the concepts. An example of a preliminary screening matrix can be seen in table C1.

TABLE C1 CONCEPT PRELIMINARY SCREENING EXAMPLE

	Benchmark	Comparees			
	Concept A	**Concept B**	**Concept C**	**Concept D**	**Concept E**
Estimated Cost	0	-	-	-	-
Overall Size	0	0	0	0	0
Simplicity of Maintenance	0	0	-	-	-
Reliability	0	0	+	0	+
Design Simplicity	0	0	+	-	+
Device Manufacturability	0	0	0	0	0
Adjustability	0	0	0	0	0
Articulation Precision	0	0	0	0	0
Ease of Final Roof Installation	0	0	0	0	0
Inherent Safety	0	0	+	+	+
Noise Level	0	-	-	-	-
Totals					
Positives	0	0	3	1	3
Negatives	0	2	3	4	3
Neutrals	11	9	5	6	5
Overall	0	-2	0	-3	0
Rank	**1**	**4**	**1**	**5**	**1**

Notice how concepts A, C and E finished with the highest overall score. These would be the concepts that would proceed for scoring in the next section.

C.1.2 - Screening

In order to select the final concept, the team performed another, more in depth, scoring exercise for the different directions of movement. This scoring exercise involved taking similar rating criteria (that was used in the concept generation section), revising them as necessary,

determining which criteria are more important and finally giving each concept a quantitative rating for each of the weighted criteria. In order to determine which criteria was the most important, each criterion was compared with one another, as seen below.

TABLE C2 CRITERIA IMPORTANCE ANALYSIS EXAMPLE

			Estimated Cost	Overall Size	Reliability	Design Simplicity	Device Manufacturability	Adjustability	Access to roof during manufacturing	Release simplicity after roof is installed	Inherent Safety
			a	**b**	**c**	**d**	**e**	**f**	**g**	**h**	**i**
Device Production	Estimated cost	**a**									
	Overall size	**b**									
	Reliability	**c**									
	Design simplicity	**d**									
	Device manufacturability	**e**									
Roof Production	Adjustability	**f**									
	Roof Manufacturability	**g**									
	Ease of Final Roof Installation	**h**									
Safety	Inherent safety	**i**									
	Hits										
	Weight										

When a criterion was deemed to be more important than another, the letter of that criterion was marked at the intersection of the two criteria. This was called a “Hit”, as seen in the second from lowest row. The hits for each criterion was summed and divided by total number of hits possible. The result was the weight of the criterion, as seen in the lowest row of the table above.

An example of the hits and weights of each criterion in the completed example table can be seen below.

TABLE C3 COMPLETED CRITERIA IMPORANCE MATRIX EXAMPLE

			Estimated Cost	Overall Size	Reliability	Design Simplicity	Device Manufacturability	Adjustability	Access to roof during manufacturing	Release simplicity after roof is installed	Inherent Safety
			a	**b**	**c**	**d**	**e**	**f**	**g**	**h**	**i**
Device Production	Estimated cost	**a**		a	c	a	a	a	a	a	i
	Overall size	**b**			c	b	b	f	g	h	i
	Reliability	**c**				c	e	c	c	c	i
	Design simplicity	**d**					d	f	g	h	i
	Device manufacturability	**e**						f	e	h	i
Roof Production	Adjustability	**f**							g	h	i
	Roof Manufacturability	**g**								h	i
	Ease of Final Roof Installation	**h**									h
Safety	Inherent safety	**i**									
	Hits		**6**	**2**	**6**	**1**	**2**	**3**	**3**	**6**	**7**
	Weight		**0.167**	**0.056**	**0.167**	**0.028**	**0.056**	**0.083**	**0.083**	**0.167**	**0.194**

It can be seen that the criteria with more hits resulted in more weight. These weights would then affect the quantitative score that each different concept would receive in the next process of this scoring, as seen below.

TABLE C4 WEIGHTED SECLECTION MATRIAL EXAMPLE

		Concept		
		Concept A	Concept B	Concept C
Selection Criteria	Weight	Value	Value	Value
Estimated Cost	16.67%	3	5	4
Overall Size	5.56%	3	5	5
Reliability	16.67%	4	4	3
Design Simplicity	2.78%	3	4	2
Device Manufacturability	5.56%	3	4	5
Adjustability	8.33%	5	3	5
Roof Manufacturability	8.33%	3	4	3
Ease of Final Roof Installation	16.67%	5	3	4
Inherent Safety	19.44%	3	4	4
Total	**100.00%**	**0.733**	**0.794**	**0.778**

Each concept was given a rating between one and five for each criterion. Five was the highest rating possible. The total was the sum of all of the products of each criterion's weight and rating. Ratings were given based on the experience of the group along with some research. At times, a sensitivity analysis was required to ensure the best concept was selected. The objective of the sensitivity analysis was to look for criteria that were weighted more heavily and look to see if increasing or decreasing that concepts rating by one point would affect their total score to be less or more than another concept.

C.1.3 - Criteria Description

Regarding the criteria used in the concept selection process, the description of what they mean can be see below. Criteria will vary depending on the concept section, as different requirements are required per section.

Estimated Cost: The initial cost of concept as well as the cost to maintain and operate it.

Overall Size: The size of the concept.

Simplicity of Maintenance: How simple the maintenance is and how easy is it to properly maintain the concept.

Reliability: Refers ability of the concept to perform consistently well, for instance how often it would not be broken.

Design Simplicity: Refers to the complexity of the design as well as how easy it would be to operate the concept.

Device Manufacturability: Refers to how easy it is to manufacture the concept.

Articulation Precision: Refers to how precise the movements of the device are.

Roof Manufacturability: Refers to how much of an interference the concept causes to the manufacturing process of the roof.

Ease of Final Roof Installation: Refers to how easy the concept makes installing the roof on top of the bungalow.

Inherent Safety: Refers to the degree of risk involved with the concept if it were to fail.

Noise Level: Refers to the level of noise that the concept would make

Efficiency: Refers to how much energy inputted to the concept is actually turned into energy that will move the articulating jig.

C.2 – Overall Concept

C.2.1 - Screening

Table C5 shows the overall layout screening process. The benchmark for this screening was the existing system used by our client.

TABLE C5 OVERALL LAYOUT SCREENING MATRIX

	Benchmark	Compares			
	Existing System	Boom Lift	Robotic Arm	Jib Hoist	Roller Coaster
Estimated Cost	0	-	-	0	-
Overall Size	0	+	+	0	0
Simplicity of Maintenance	0	0	-	0	0
Reliability	0	+	+	+	+
Design Simplicity	0	0	-	0	0
Device Manufacturability	0	-	-	+	+
Articulation Precision	0	+	+	+	+
Ease of Final Roof Installation	0	+	+	+	+
Inherent Safety	0	+	+	+	+
Noise Level	0	0	0	0	0
Positives	0	5	5	5	5
Negatives	0	2	4	0	1
Neutrals	10	3	1	6	4
Overall	**0**	**3**	**1**	**5**	**4**
Rank	**5**	**3**	**4**	**1**	**2**
Continue?	No	Yes	Yes	Yes	Yes

C.2.2 - Scoring

Table C6 shows the scoring weights used.

TABLE C6 OVERALL LAYOUT CRITERIA WEIGHTING MATRIX

		Estimated Cost	Overall Size	Simplicity of Maintenance	Reliability	Design Simplicity	Device Manufacturability	Roof Manufacturability	Articulation Precision	Ease of final roof installation	Inherent Safety	Noise Level
		a	**b**	**c**	**d**	**e**	**f**	**g**	**h**	**i**	**j**	**k**
Estimated Cost	**a**		a	a	d	a	f	g	a	i	j	a
Overall Size	**b**			b	d	e	f	g	b	i	j	b
Simplicity of Maintenance	**c**				d	e	f	g	c	i	j	c
Reliability	**d**					d	d	g	d	i	j	d
Design Simplicity	**e**						f	g	e	i	j	e
Device Manufacturability	**f**							g	f	i	j	f
Roof Manufacturability	**g**								g	i	j	g
Articulation Precision	**h**									i	j	h
Ease of final roof installation	**i**										j	i
Inherent Safety	**j**											j
Noise Level	**k**											
HITS		**5**	**3**	**2**	**7**	**4**	**2**	**8**	**1**	**9**	**10**	**0**
Weight		**0.098**	**0.059**	**0.039**	**0.137**	**0.078**	**0.039**	**0.157**	**0.020**	**0.176**	**0.196**	**0.000**

We see that inherent safety scored the highest, at 19.6 %, and noise level scored lowest with 0%. The noise level was removed due to the percentage being 0.We then ranked our four overall layout options.

Table C7 shows the concept scoring results.

TABLE C7 OVERALL LAYOUT CONCEPT SCORING

		Concepts			
		BOOM Lift	**Robotic Arm**	**Jib Hoist**	**Roller Coaster**
Selection Criteria	Weight	Value	Value	Value	Value
Estimated Cost	9.80%	4	3	5	3
Overall Size	5.88%	2	5	4	2
Simplicity of Maintenance	3.92%	3	3	3	3
Reliability	13.73%	3	3	5	4
Design Simplicity	7.84%	3	3	5	2
Device Manufacturability	3.92%	4	4	5	2
Roof Manufacturability	15.69%	4	4	5	5
Articulation Precision	1.96%	3	4	5	4
Ease of final roof installation	17.65%	3	4	5	5
Inherent Safety	19.61%	4	5	4	4
Total	**100.00%**	**0.686**	**0.780**	**0.933**	**0.769**

C.3 – Up and Down Concept

C.3.1 - Screening

Table C8 shows the overall layout screening process. The benchmark for this screening was the hand winch.

TABLE C8 UP AND DOWN SCREENING

	Benchmark	Compares				
	Hand Winch	**Power Winch**	**Hydraulic Cylinder**	**Rack and Pinion**	**Linear Actuator Ball Screw**	**Linear Actuator Belt/Chain**
Estimated Cost	0	0	-	0	0	0
Overall Size	0	0	-	0	0	0
Simplicity of Maintenance	0	0	-	0	0	0
Reliability	0	0	0	-	0	0
Design Simplicity	0	0	-	0	0	0
Device Manufacturability	0	0	-	0	0	0
Articulation Precision	0	+	+	+	+	+
Ease of Final Roof Installation	0	+	+	+	+	+
Inherent Safety	0	+	+	+	+	+
Noise Level	0	0	0	0	0	0
Positives	0	3	3	3	3	3
Negatives	0	0	5	1	0	0
Neutrals	10	6	2	5	6	6
Overall	**0**	**3**	**-2**	**2**	**3**	**3**
Rank	**5**	**1**	**6**	**4**	**1**	**1**
Continue?	No	Yes	No	Yes	Yes	Yes

C.3.2 - Scoring

Table C9 shows the scoring weights used.

TABLE C9 UP AND DOWN CRITERIA WEIGHTING MATRIX

		Estimated Cost	Overall Size	Simplicity of Maintenance	Reliability	Design Simplicity	Device Manufacturability	Roof Manufacturability	Articulation Precision	Ease of installation	Inherent Safety	Noise Level
		a	b	c	d	e	f	g	h	i	j	k
Estimated Cost	a		a	a	d	a	f	g	a	i	j	a
Overall Size	b			b	d	e	f	g	b	i	j	b
Simplicity of Maintenance	c				d	e	f	g	c	i	j	c
Reliability	d					d	d	g	d	i	j	d
Design Simplicity	e						f	g	e	i	j	e
Device Manufacturability	f							g	f	i	j	f
Roof Manufacturability	g								g	i	j	g
Articulation Precision	h									i	j	h
Ease of final roof installation	i										j	i
Inherent Safety	j											j
Noise Level	k											
HITS		5	3	2	7	4	6	8	1	9	10	0
Weight		0.09	0.06	0.07	0.13	0.07	0.11	0.15	0.02	0.16	0.18	0.00

We see that inherent safety obtained the highest weight, 18.2%, and noise received the lowest at 0%. The noise criterion was thus removed. We then ranked our four options and applied these weights to those ranks

Table C10 shows the concept scoring results.

TABLE C10 UP AND DOWN CONCEPT SCORING

		Rack & Pinion	Power Winch	Screw Linear actuator	Belt/Chain Linear Actuator
Selection Criteria	Weight	Value	Value	Value	Value
Estimated Cost	9.09%	3	5	3	4
Overall Size	5.45%	5	5	5	5
Simplicity of Maintenance	3.64%	3	5	3	4
Reliability	12.73%	2	4	3	3
Design Simplicity	7.27%	3	5	5	4
Device Manufacturability	10.91%	2	5	2	4
Roof Manufacturability	14.55%	4	4	4	4
Articulation Precision	1.82%	5	5	5	5
Ease of final roof installation	16.36%	4	5	5	5
Inherent Safety	18.18%	3	5	5	4
Total	**100.00%**	**0.644**	**0.945**	**0.804**	**0.822**

C.4 – In and Out Motion

C.4.1 - Concept Screening

Table C11 shows the screening process for the in and out motion. The benchmark for this screening was the existing system used by our client.

TABLE C11 IN & OUT CONCEPT SCREENING

	Benchmark	Comparees					
Selection Criteria	Chain & Gear System (Reference)	Hydraulic Cylinder	Rack & Pinion	Pneumatic Cylinder	Screw Linear Actuator	Belt/Chain Linear Actuator	Motorized Rollers on a Linear Guide
Estimated Cost	0	-	-	-	-	-	-
Overall Size	0	-	+	-	+	+	+
Simplicity of Maintenance	0	0	+	0	+	+	+
Reliability	0	0	+	0	+	+	+
Design Simplicity	0	0	+	0	+	+	+
Efficiency	0	-	-	-	-	-	-
Device Manufacturability	0	0	+	0	+	+	+
Articulation Precision	0	+	+	+	+	+	+
Ease of Final Roof Installation	0	+	+	+	+	+	+
Inherent Safety	0	0	+	0	+	+	+
Noise Level	0	0	+	0	+	+	+
Totals							
Plus	0	2	9	2	9	9	9
Sames	11	6	0	6	0	0	0
Minuses	0	3	2	3	2	2	2
Net	0	-1	7	-1	7	7	7
Rank	**5**	**5**	**1**	**5**	**1**	**1**	**1**
Continue?	**No**	**No**	**Yes**	**No**	**Yes**	**Yes**	**Yes**

C.4.2 - Concept Scoring

Table C12 shows the criteria weights used for scoring.

TABLE C12 IN & OUT CRITERIA WEIGHTING MATRIX

		Estimated Cost	Overall Size	Simplicity of Maintenance	Reliability	Design Simplicity	Efficiency	Device Manufacturability	Articulation Precision	Ease of Roof Installation	Inherent Safety	Noise Level
		a	**b**	**c**	**d**	**e**	**f**	**g**	**h**	**i**	**j**	**k**
Estimated Cost	**a**		a	a	d	a	a	f	a	i	j	a
Overall Size	**b**			b	d	e	f	g	b	i	j	b
Simplicity of Maintenance	**c**				d	e	f	g	c	i	j	c
Reliability	**d**					d	d	d	d	i	j	d
Design Simplicity	**e**						e	g	e	i	j	e
Efficiency	**f**							g	f	i	j	f
Device Manufactur-ability	**g**								g	i	j	g
Articulation Precision	**h**									i	j	h
Ease of Final Roof Installation	**i**										j	i
Inherent Safety	**j**											j
Noise Level	**k**											
Hits		**6**	**3**	**2**	**8**	**5**	**5**	**6**	**1**	**9**	**10**	**0**
Weight		**0.11**	**0.05**	**0.04**	**0.15**	**0.09**	**0.09**	**0.11**	**0.02**	**0.16**	**0.18**	**0.00**

From this matrix, inherent safety was weighted the highest as the group deemed that the design must first and foremost be safe. Another note is that the group decided that noise level was of not great importance since it will already be working in a manufacturing shop, this

resulted in a weight percent of 0. The noise criterion was removed from the concept scoring as a result of the weight percentage.

Table C13 shows the concept scoring results.

TABLE C13: IN & OUT MOTION CONCEPT SCORING

		Concepts		
		Rack & Pinion	**Belt/Chain Linear Actuator**	**Motorized rollers on a linear guide**
Selection Criteria	**Weight**	**Value**	**Value**	**Value**
Estimated Cost	10.91%	3	4	5
Overall Size	5.45%	5	5	5
Simplicity of Maintenance	3.64%	4	3	5
Reliability	14.55%	4	4	5
Design Simplicity	9.09%	3	3	4
Efficiency	9.09%	4	5	5
Device Manufacturability	9.09%	4	5	5
Articulation Precision	10.91%	3	3	5
Ease of Roof Installation	1.82%	5	5	5
Inherent Safety	18.18%	5	4	5
Total	**100.00%**	**0.822**	**0.818**	**0.982**

C.5 – Rotation

C.5.1 - Concept Screening

Table C14 shows the rotation screening process. The benchmark for this screening was a shaft on both sides.

TABLE C14 ROTATION SCREENING

	Benchmark	**Comparees**		
	Shaft on both sides	**Rotatable wrist**	**Hydraulic arm**	**Rigging cable with stopper**
Estimated Cost	0	-	-	0
Overall Size	0	+	+	0
Simplicity of Maintenance	0	-	-	-
Reliability	0	+	+	-
Design Simplicity	0	-	-	-
Device Manufacturability	0	-	-	-
Adjustability	0	-	-	-
Articulation Precision	0	+	+	-
Ease of Final Roof Installation	0	-	-	-
Inherent Safety	0	-	+	-
Noise Level	0	0	-	-
Totals				
Positives	0	3	4	0
Negatives	0	7	7	9
Neutrals	11	1	0	2
Overall	**0**	**-4**	**-3**	**-9**
Rank	**1**	**3**	**2**	**4**
Continue?	Yes	No	Yes	No

C.5.2 - Concept Scoring

Table C15 shows the criteria weights used for scoring.

TABLE C15 ROTATION CRITERIA WEIGHING MATRIX

		Estimated Cost	Overall Size	Simplicity of Maintenance	Reliability	Design Simplicity	Device Manufacturability	Roof Manufacturability	Articulation Precision	Inherent Safety	Noise Level
		a	**b**	**c**	**d**	**e**	**f**	**g**	**h**	**i**	**j**
Estimated Cost	**a**		a	a	d	a	f	g	a	i	a
Overall Size	**b**			b	d	e	f	g	b	i	b
Simplicity of Maintenance	**c**				d	e	f	g	c	i	c
Reliability	**d**					d	d	g	d	i	d
Design Simplicity	**e**						f	g	e	i	e
Device Manufacturability	**f**							g	f	i	f
Roof Manufacturability	**g**								g	i	g
Articulation Precision	**h**									i	h
Inherent Safety	**j**										i
Noise Level	**k**										
HITS		**5**	**3**	**2**	**7**	**4**	**6**	**8**	**1**	**9**	**0**
Weight		**0.11**	**0.07**	**0.04**	**0.16**	**0.09**	**0.13**	**0.18**	**0.02**	**0.20**	**0.00**

From the above table we can see that the inherent safety is the highest priority, and the noise level was not a concern. The noise level will thus be removed. We then ranked the top two concepts and applied the weight to the ranks.

Table C16 shows the concept scoring results.

TABLE C16 ROTATION CONCEPT SCORING

	Concept	
	Shaft on both sides	**Hydraulic arm**

Selection Criteria	Weight	Value	Value
Estimated Cost	11.11%	5	2
Overall Size	6.67%	4	4
Simplicity of Maintenance	4.44%	5	3
Reliability	15.56%	4	4
Design Simplicity	8.89%	5	3
Device Manufacturability	13.33%	4	3
Roof Manufacturability	17.78%	5	3
Articulation Precision	2.22%	5	3
Inherent Safety	20.00%	4	3
Noise Level	0.00%	3	3
Total	**100.00%**	**0.889**	**0.622**

C.6 – Roof Anchoring

C.6.1 - Concept Screening

Table C17 shows the concept screening process. The benchmark for this screening was the bench vise concept.

TABLE C17 ROOF ANCHORING PRELIMINARY SCREENING MATRIX

	Benchmark	Comparees			
	Bench Vice	Scissor Clamp	Vacuum Lift	Multiple Toggle Clamps	Lifting Lug Utilization
Estimated Cost	0	-	-	+	+
Overall Size	0	-	+	+	+
Simplicity of Maintenance	0	-	-	+	+
Reliability	0	+	-	-	-
Design Simplicity	0	-	-	+	+
Device Manufacturability	0	-	-	-	0
Adjustability	0	+	0	-	-
Ease of final roof installation	0	0	+	-	-
Inherent Safety	0	0	-	-	0
Noise Level	0	0	-	0	0
Totals					
Positives	0	2	2	4	4
Negatives	0	5	7	5	3
Neutrals	10	3	1	1	3
Overall	**0**	**-3**	**-5**	**-1**	**1**
Rank	**2**	**4**	**5**	**3**	**1**
Continue?	Yes	No	No	No	Yes

C.6.2 - Concept Scoring

Table C18 shows the criteria weights used for scoring.

TABLE C18 ROOF ANCHORING CRITERIA WEIGHTING

			Estimated Cost	Overall Size	Reliability	Design Simplicity	Device Manufacturability	Adjustability	Access to roof during manufacturing	Release simplicity after roof is installed	Inherent Safety
			a	**b**	**c**	**d**	**e**	**f**	**g**	**h**	**i**
Device Production	Estimated cost	**a**		a	c	a	a	a	a	a	i
	Overall size	**b**			c	b	b	f	g	h	i
	Reliability	**c**				c	e	c	c	c	i
	Design simplicity	**d**					d	f	g	h	i
	Device manufacturability	**e**						f	e	h	i
Roof Production	Adjustability	**f**							g	h	i
	Roof Manufacturability	**g**								h	i
	Ease of Final Roof Installation	**h**									i
Safety	Inherent safety	**i**									
	Hits		**6**	**2**	**6**	**1**	**2**	**3**	**3**	**6**	**7**
	Weight		**0.17**	**0.06**	**0.17**	**0.03**	**0.06**	**0.08**	**0.08**	**0.14**	**0.22**

It can be seen that the inherent safety received the greatest importance. It was chosen in all cases as safety was a very large concern in this section. The roof assembly must be sufficiently fixed so that it does not fall out when the roof is in the air. In the event of a dropped roof, there would be damages to property and large safety risks. Noise level was a criterion that was removed from this section as the concepts to be scored did not produce excessive amounts of noise.

Table C19 shows the concept scoring results.

TABLE C19 ROOF ANCHORING SCORING MATRIX

		Concept	
		Bench Vise	**Lifting Lug Utilization**
Selection Criteria	**Weight**	**Value**	**Value**
Estimated Cost	16.67%	3	5
Overall Size	5.56%	3	5
Reliability	16.67%	4	4
Design Simplicity	2.78%	3	4
Device Manufacturability	5.56%	3	4
Adjustability	8.33%	5	3
Roof Manufacturability	8.33%	3	4
Ease of Final Roof Installation	13.89%	5	3
Inherent Safety	22.22%	3	4
Total	**100.00%**	**0.722**	**0.800**

Appendix D – Detailed Analysis

List of Figures

Figure #	Heading	Page #
D1	Free body diagram of fork tine	116
D2	Free body diagram of long beam	117
D3	Free body diagram of fork shank	119
D4	Shaft parameter and equation part (1/2)	119
D5	Shaft parameter and Equation (2/2)	120
D6	Dimensions of the stand	120
D7	Dimensions of the plate	121
D8	Dimensions of the latch	122
D9	Deflection of Main Guide Analysis (1/2)	123
D10	Deflection of Guide Column (2/2)	128
D11	Hoist Pin and Horizontal Trolley Plate Analysis	130
D12	Horizontal Trolley Analysis (1/2)	131
D13	Horizontal Trolley Analysis (2/2)	143
D14	Force Required to Move Horizontal Trolley Analysis	144
D15	Exploded jib crane.	146
D16	Horizontal beam FBD with trolley load at far end.	147
D17	Horizontal beam FBD with trolley load at close end.	149
D18	Vertical support beam FBD with trolley load at far end.	151
D19	Vertical support beam FBD with trolley load at close end.	153
D20	Rotation weldment FBD with trolley load at far end.	155
D21	Rotation weldment FBD with trolley load at close end.	160
D22	Rotation shaft FBD.	162
D23	Mast column FBD.	164

List of Tables

Table #	Heading	Page
D1	MATERIAL PROPERTIES FOR FORK	114
D2	FORK TINE DIMENSION CALCULATION	117
D3	LONG BEAM DIMENSION CALCULATION	118
D4	FORK SHANK DIMENSION CALCULATION	121
D5	TENSILE STRENGTH CALCULATION FOR THE LIFTING LUG BASE	122
D6	MATERIAL PROPERTIES FOR SHAFT	125
D7	SHAFT DIMENSION CALCULATION	126
D8	DIMESNSIONS OF BEARINGS	127
D9	TENSILE STRENGTH CALCULATION FOR BEARING BASE	135
D10	JIG ASSEMBLY MATERIAL PROPERTIES	136
D11	RIB ANALYSIS TABLE	138
D12	TOP BAR ANALYSIS TABLE	139
D13	HORIZONTAL BEAM REACTION FORCES WITH TROLLEY AT END	140
D14	HORIZONTAL BEAM REACTION FORCES WITH TROLLEY AT MAST END	141
D15	VERTICAL SUPPORT BEAM REACTION FORCES WITH TROLLEY AT END	142
D16	VERTICAL SUPPORT BEAM REACTION FORCES WITH TROLLEY AT MAST	142
D17	ROTATION WELDMENT REACTION FORCES WITH TROLLEY AT END	143
D18	ROTATION WELDMENT REACTION FORCES WITH TROLLEY AT MAST	145
D19	MAST COLUMN REACTION FORCES	146

D.1 – Fork and Jig Rotation Analysis

The fork detailed fork analysis is shown in figure D1, and the material properties shown in TABLE D1.

TABLE D1: MATERIAL PROPERTIES FORK

Material	**Yield strength (psi)**	**Density (lb/in^3)**
CSA G40.21-44W	44000	0.284

A Factor of Safety is used that = $\frac{\text{Yield Strength}}{\text{allowable strength}}$

Fork tine:

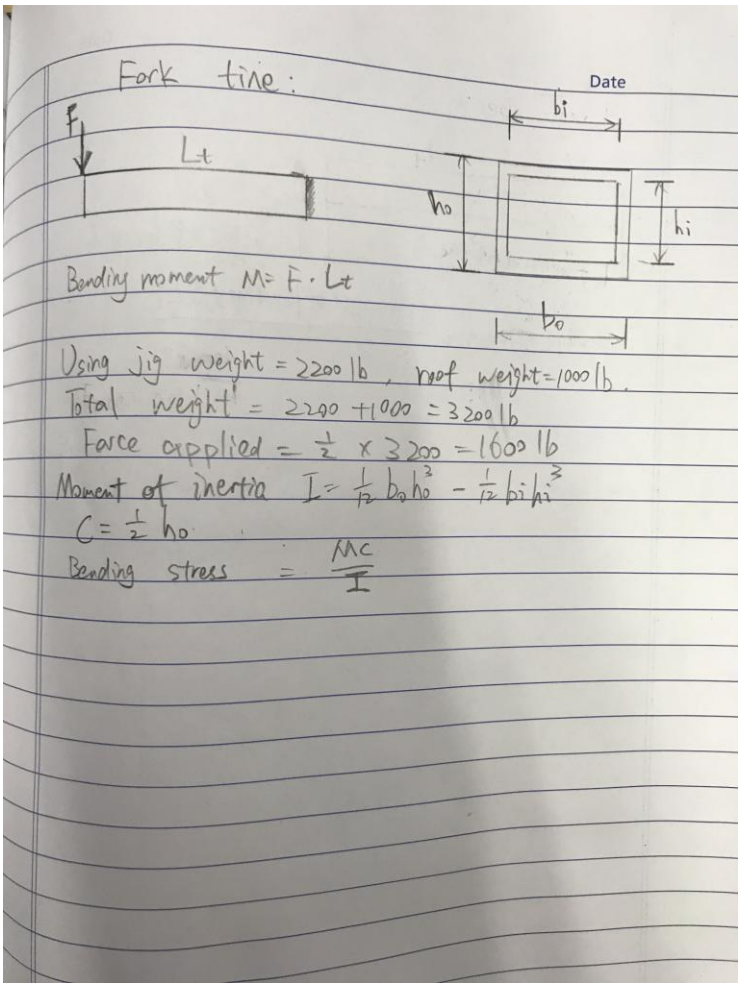

Figure D1. Free body diagram of fork tine

After basic parameters, dimensions and equations have been generated, an excel sheet was generated to calculate the dimensions of the fork tine. These are shown in TABLE D2.

TABLE D2: FORK TINE DIMENSION CALCULATION

Fork tine	
S.F.	3
Force applied (lb)	1600
Bending moment (lb*in)	150400
Lt (in)	94
Outer width (in)	10
Outer height (in)	6
Inner width (in)	9.625
Inner height (in)	5.625
Wall thickness (in)	0.1875
Moment of inertia (in^4)	37.24639893
C (in)	3
Allowable strength (psi)	12113.92277
Volume (in^3)	550.78125
Weight (lb)	156.421875

By using the excel solver, the final dimension of the fork tine was found. The length of the fork tine was determined to be 94 in., this size allows for the roof to be placed on top of the assembly from outside of the existing bridge crane area. The total distance between the fork tines is 110 in., leaving 39” for mounting bearings and the jig assembly.

The long beam analysis is shown in figure D2.

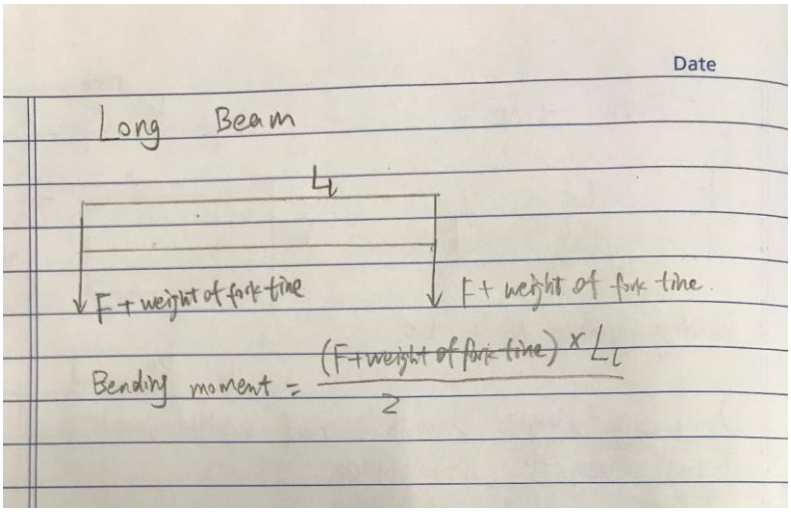

Figure D2. Free body diagram of long beam

After determining the parameters for the long beam, and using the same equation for the fork tine calculation, an excel sheet was generated to calculate the dimensions of the long beam. These are shown in TABLE D3.

TABLE D3: LONG BEAM DIMENSION CALCULATION

Long beam	
S.F.	3
Force applied	1756.421875
Bending moment	182834.7351
Ll (in)	208.19
Outer width (in)	4
Outer height (in)	6
Inner width (in)	3
Inner height (in)	5
Wall thickness (in)	0.5
Moment of inertia (in^4)	40.75
C (in)	3

Allowable strength (psi)	13460.2259
Volume (in^3)	1873.71
Weight (lb)	532.13364

From the jig section, the width of the jig was found to be 194.36 in. and the shaft length from the jig was 3.25 in., with a flange thickness of 0.6875 in. Therefore the width of the jig from one end of flange to the other end of flange was 202.235 in. The length of the long beam was found to be 208.19 in., which gives a 2.9775 in. clearance on each side for the shaft and the flange.

The detailed analysis for the fork shank is shown in figure D3.

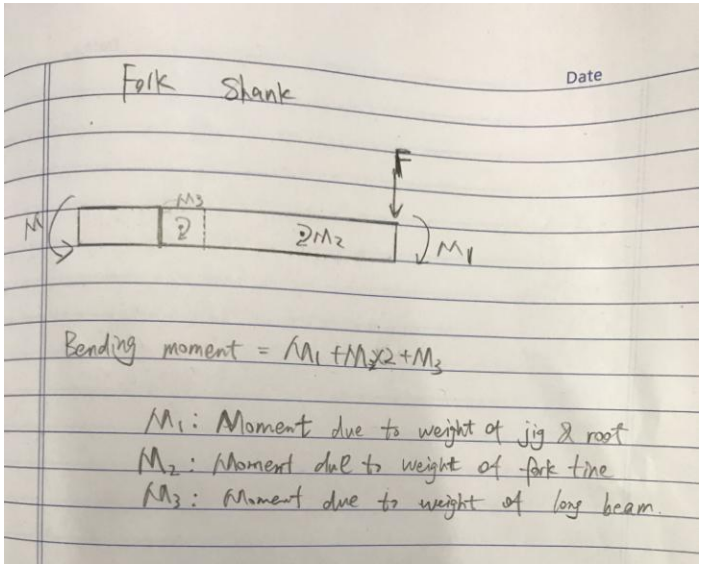

Figure D3. Free body diagram of fork shank

After determining the parameters for the fork shank and using the same equation as used for fork tine calculation, an excel sheet was generated to calculate the dimensions of the fork shank. These are shown in TABLE D4.

TABLE D4: FORK SHANK DIMENSION CALCULATION

Fork shank	
S.F.	3
bending moment	365107.6522

Ls (in)	12
Outer width (in)	10
Outer height (in)	6
Inner width (in)	9
Inner height (in)	5
Wall thickness (in)	0.5
Moment of inertia (in^4)	86.25
C (in)	3
Allowable strength (psi)	12699.3966
volume (in^3)	180
Weight (lb)	51.12

By using the excel solver, the final dimension of the fork shank was generated. The length of the fork shank was 12", which gave the clearance for the size of the hoist selected in the horizontal trolley section.

The lifting lug base should be capable of resisting the tensile strength from the lifting lug due to the weight of fork, jig and roof. The total weight of the fork, jig and roof is 5000 lb (with safety factor). The capacity of the lifting lug is 15,000 lb using the safety factor of 3. The material of the lifting lug base was AISI 1020 Alloy Steel, where the yield strength is 42748 psi, using the safety factor of 3. The allowable tensile strength on the lifting lug base was therefore 42748/3 = 14249 lb. The tensile strength applied on the lifting lug base was the force applied divided by area of the lifting lug base surface. An excel sheet was generated to show the calculation of the tensile strength. This is shown in table D5.

TABLE D5: TENSILE STRENGTH CALCULATION FOR THE LIFTING LUG BASE

Force	5000
Length (in)	4
Width (in)	4
Bolt hole diameter (in)	1.25
Area (in^2)	14.77281537
Tensile strength (psi)	338.4595201
Allowable strength (psi)	14249

As we can see from the calculation, the tensile strength was less than the allowable strength. Therefore, the lifting lug was capable to resist the tensile strength.

The shaft is analysed next. It`s material properties are shown in table D6.

TABLE D6: MATERIAL PROPERTIES OF SHAFT

Material	**Yield strength (psi)**	**Endurance limit (Sn) (psi)**
AISI 4340 Alloy Steel	68000	62000

The parameters and equations for the shaft calculations are shown in figure D4 and D5.

Shaft

Date

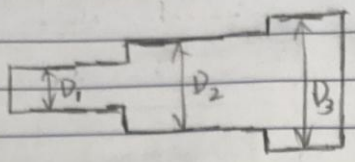

Shaft Diameter $D = \left[\frac{32N}{\pi}\sqrt{\left[\frac{K_t M}{S_n'}\right]^2 + \frac{3}{4}\left[\frac{T}{S_y}\right]^2}\right]^{1/3}$

$S_n' = S_n (C_m)(C_{st})(C_R)(C_S)$

where S_n is the endurance limit.

$C_m = 1$ $C_R = 0.81$ for 0.99 reliability

$C_{st} = 1$ $C_S = 0.85$ estimate from textbook Figure 5-9

Assume $K_t = 1.6$ for well-rounded fillet

S_y is the yield strength.

T = Force applied by operator x radius of hand wheel.

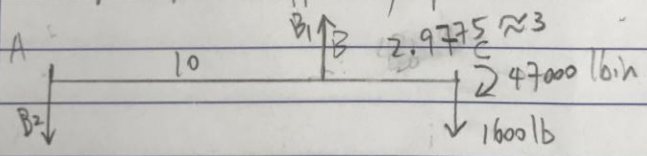

A & B are the positions of two bearing.

The moment from the jig & root is 47000 lb.in (Based on jig analysis)

2.9975" is the distance from Bearing 2 to the end of the flange from fork calculation section.

1600 lb is half of the jig & root weight

Figure D4. Shaft parameter and equation part (1/2)

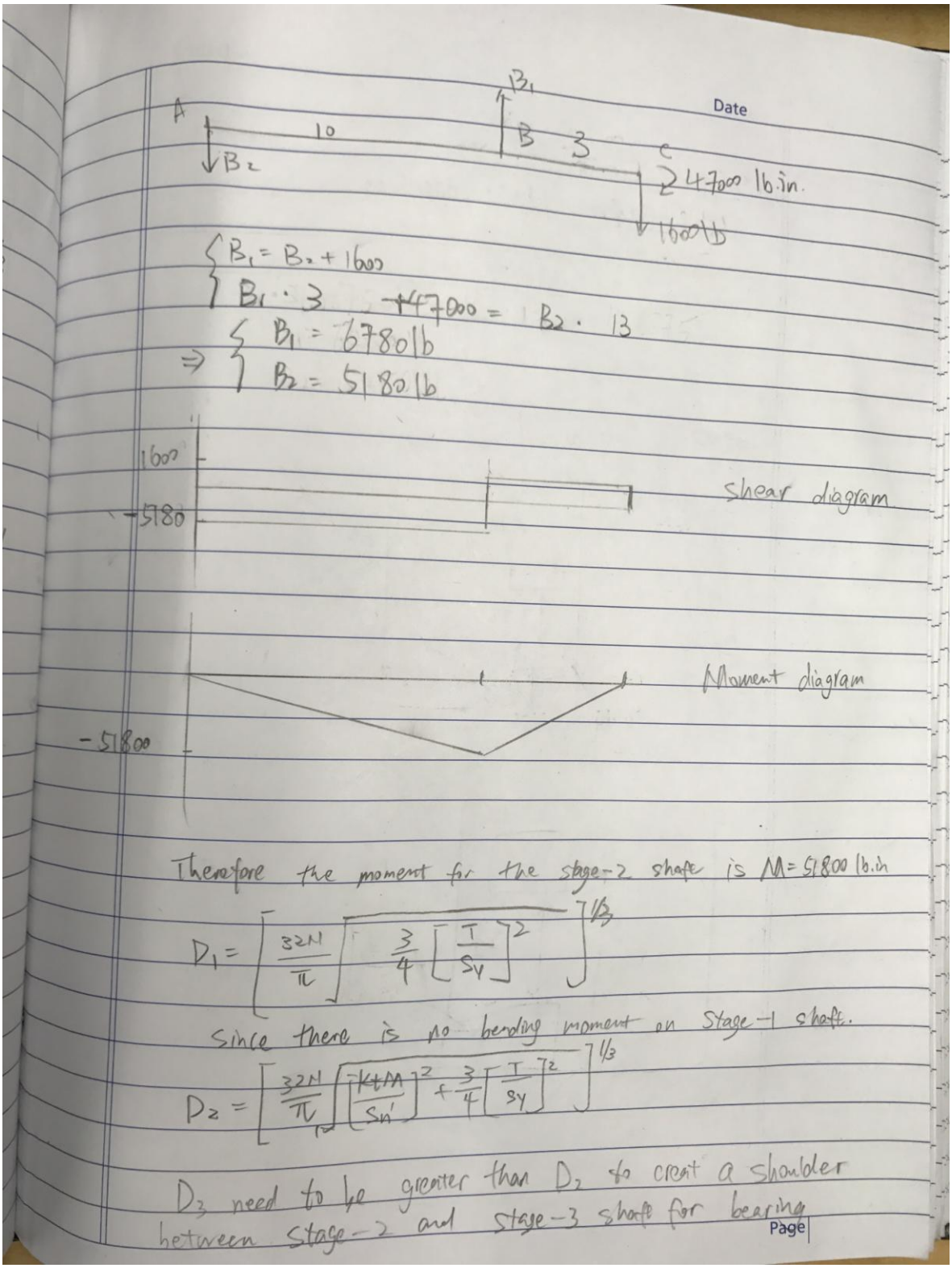

Figure D5. Shaft parameter and Equation (2/2)

To determine the torque transmitted by the shaft, when the jig was at vertical position, the center of mass was off-centered by 1 in., and the force applied was 2700 lb which was determined in the jig section. Therefore, the maximum torque transmitted by the shaft was 2700 lb*in.

After determining the parameters and equations for calculating the shaft, an excel sheet was generated to determine the dimension of the shaft. This is shown in table

TABLE D7: SHAFT DIMENSION CALCULATION

Torque (lb*in)	2700	
Design Factor	3	
Sy (psi)	68000	
Sn' (psi)	42687	
N (design factor)	3	
Kt (well-rounded fillet)	1.6	
D1 (in)	1.016644108	1.1875
M2 (lb*in)	51800	
D2 (in) (well-rounded fillet)	3.907219712	4
D3 (in)	D3 need to be greater than D2 in order to provide a shoulder for the bearing	4.5

The diameter for the stage-1 shaft was calculated to be 1.02 in., and to use an off the shelf bearing the next standard size up, 1.1875 in., was selected. The calculated diameter for the stage-2 shaft was 3.907 in., therefore a 4 in. diameter was chosen. The diameter of the stage-3 shaft needs to be greater than the diameter of stage-2 shaft to provide a shoulder for the bearing, therefore, 4.5 in. was chosen as the diameter of the stage-3 shaft.

Next the shaft length is determined. The total width of the bearing 1 is 2.75 in., therefore the length of the stage-1 shaft is set to be 4.31 in. to give 1.56 in. clearance for the hand wheel lock

device. The length of stage-2 shaft was the outer width of fork tine minus the total width of bearing 1, which gives the length of stage-2 shaft to be 7.25 in. The length of stage-3 shaft was 2.125 in. to give some clearance for the bolts on the flange. The clearance for the shaft and flange is 2.9775 in., and the thickness of the flange is 0.6875 in., leaving 0.165 in. clearance for the shaft fillet. For the other side of the fork tine, the length of stage-2 and stage-3 shaft remain the same, since the other side did not implement the hand wheel and hand wheel lock device. The length of the stage-1 shaft is 3.75 in. to give a 1" extension on the side in case the shaft slipped out of bearing 1.

Because the stage-1 shaft was bending moment free, the fillet radius between stage-1 and stage-2 shaft didn't affect the calculation, therefore a fillet radius of 0.07 in. was selected. For the well-rounded fillet between stage-2 and stage-3, a radius value of 0.16 in. was selected to give an estimated Kt value of 1.6.

Bases for the bearings must now be analysed. The purposes of determining the height of the two bearing bases were: 1. To give enough thickness for bolt while bolting the bearings on the fore tine. 2. To adjust the bore centerline of two bearings to make the bores concentric since the height of these two bearings are different. For bearing 2, a 0.5 in. height is selected for the bolt. To determine the bearing base size for bearing 1, the diameter of bearing 1 and 2 is required. These are shown in table D8.

TABLE D8: DIMESNSIONS OF BEARINGS

Bearing #	**Base to bore centerline height (in)**
Bearing 1	1.5
Bearing 2	4.25

Therefore the height of the bearing base for bearing 1 was found to be (4.25-1.5) + 0.5=3.25 in

As for the tensile strength acting on the base 2, the reaction force was found to be 6780 lb from shaft analysis. The tensile strength applied on the bearing base 2 was the force divided by the area of the bearing base 2 surface. An excel sheet is generated to calculate the tensile strength as shown in TABLE D9.

TABLE D9 TENSILE STRENGTH CALCULATION FOR BEARING BASE

Force applied (lb)	**6780**
Length (in)	3.34
Width (in)	4.5
Bolt diameter (in)	0.88
Area (in^2)	13.81357532
Tensile strength (psi)	490.8215173
Allowable strength (psi)	14249

The tensile strength is less than the allowable strength and therefore, the base size is acceptable.

The hand-wheel lock device must now be analysed. The hand wheel lock device is assembled by it's stand, strap hinge, latch, plate and a magnet. The dimension of the stand is as shown in figure D6. The cut away space was enough for the height and width of the bearing 1 and bearing base 1. The threaded holes were for the hinge and magnet to bolt on the stand.

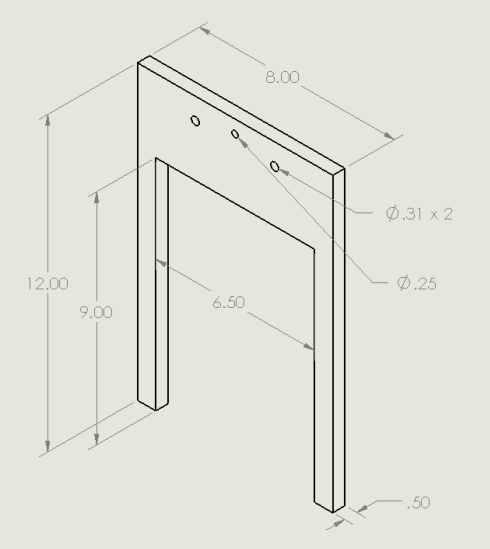

Figure D6. Dimensions of the stand

The diameter of the plate was determined by the height of the stand and the position of the hinge. There were a total of 8 sockets equally distributed along the edge of the wheel locking plate. Seven of the sockets (at 0°, 45°, 90°, 135°, 225°, 270°, and 315°) were designed to hold the wheel in stationary position with no degree of freedom. The socket at 180° was designed to have 4 degrees of freedom. This allows for a stable work environment when assembly takes place, and some play in the assembly when it is being placed on top of the bungalow. The latch width was chosen as the width of the smallest notches in the locking plate. Dimensions of the locking plate and the latch are shown in figures D7 and D8.

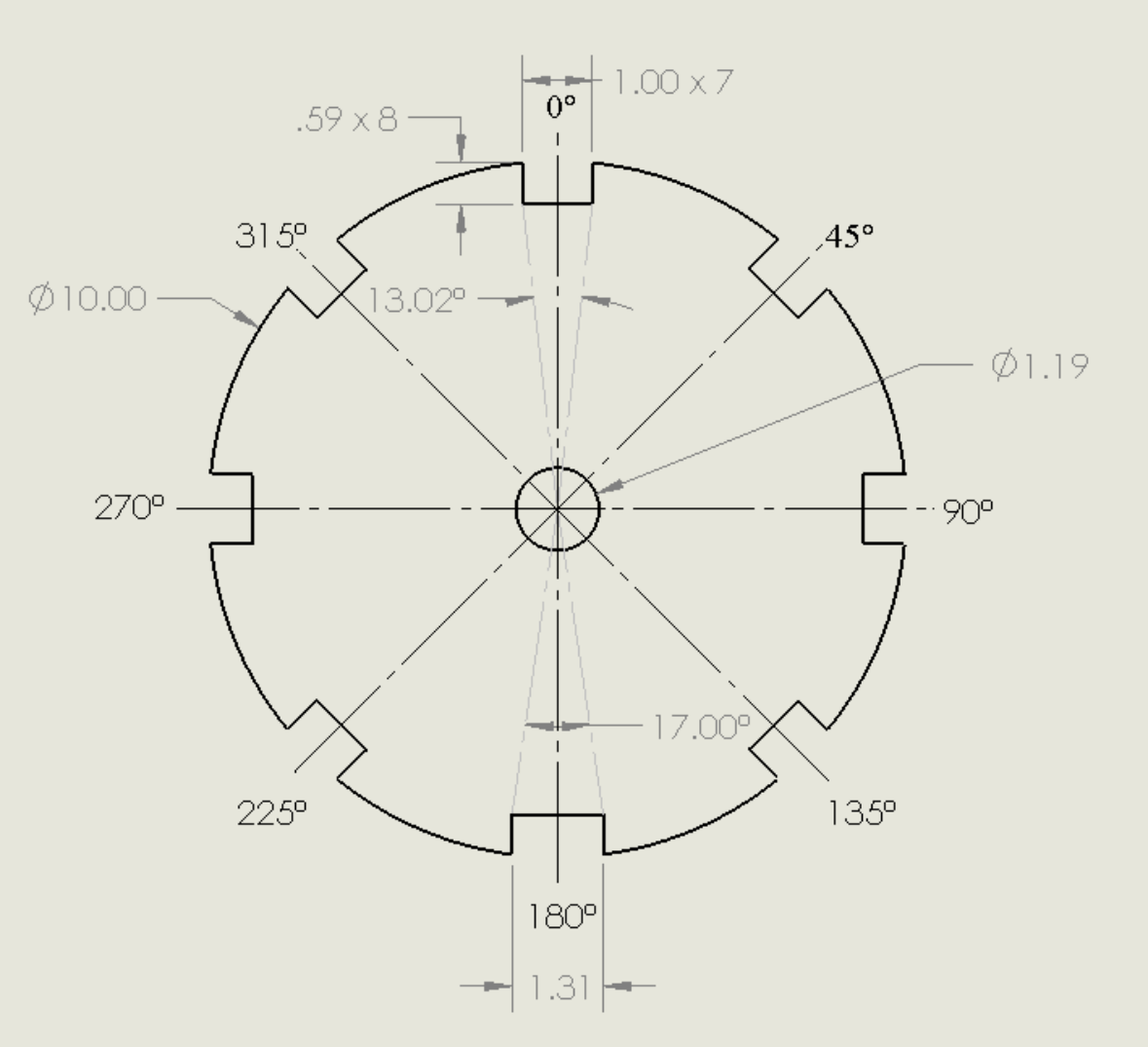

Figure D7: Dimensions of the plate

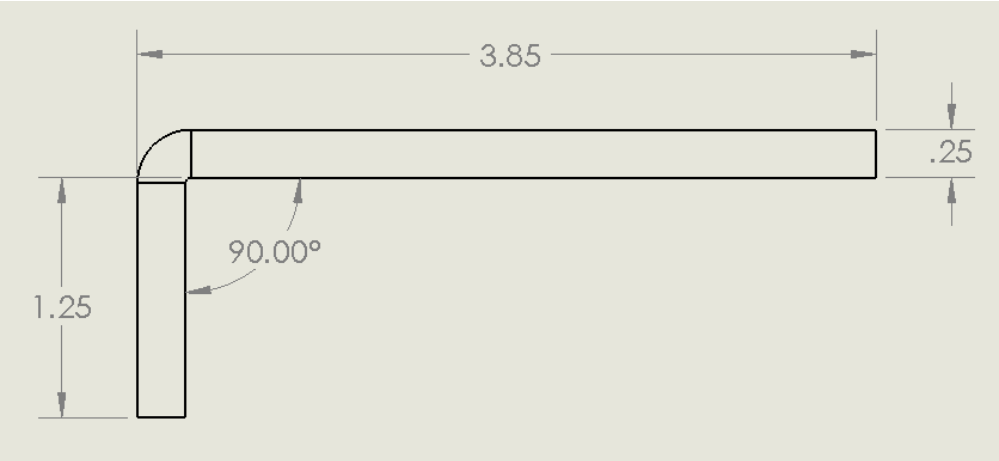

Figure D8. Dimensions of the latch

The force on the latch was determined to be 2700 lb-in in previous sections, therefore the force on the connection between latch and the socket was 2700/4.38 = 616.44 lb. The thickness of the plate and the latch were 0.25". The area at the connection was 0.25 in. * 0.25 in. = 0.0625 in^2. Therefore, the bearing stress at the connection was F/A = 616.44/0.0625 = 9863.04 psi, which had the safety factor of 42748/9863.04 = 4.3. Therefore the 0.25" thickness of the plate and the latch was acceptable for bearing stress from the shaft torque.

D.2 – Jig Analysis

For the detailed analysis the properties of the materials used in designing the parts of the jig can be seen in TABLE D10

TABLE D10 JIG ASSEMBLY MATERIAL PROPERTIES

Material	**Yield Strength**	**Shear Strength**	**Young's Modulus**	**Endurance Limit**	**Modulus of Rigidity**
CSA G40.21-44W	44 ksi [6]	25.38 ksi	27557 ksi [7]	39.15 ksi [8]	10900 ksi [9]
Cold Drawn 4340 Steel	68 ksi [10]	39.2 ksi	27557 ksi [7]	40 ksi [10]	10900 ksi [9]

Shear strength was determined from the distortion energy theory, which states that the shear strength of a material is 0.577 times that of the materials yield strength [10]. safety factor of 3 was applied to all designed parts that were involved in the support of the roof assembly as per

CSA –Z256-M87: Safety Code for Material Hoists [13]. A safety factor of 2 was applied to truss locators due to the fact that truss locators do not fall under a standard and a lower safety factor would reduce costs. The endurance limit with factors for all CSA G40.21-44W parts was determined to be 18.972, based on a reliability factor of 0.75, a size factor of 0.8 and a stress factor of 0.8 [10]. As the endurance limit is greater than the allowable yield strength of all parts, all parts are designed for fatigue.

The detailed analysis for the jig assembly will be split up into several sections. The parts were designed to account for loading on the part as well as the force of gravity. As well, loads mentioned at 0 degrees refer to the jig when the roof cap is pointed to the ground. The rib analysis and top bar analysis will show a table of the setup used to determine the minimized dimensions using solver. The remaining sections will provide an overview of their analysis. The table for the rib and top bar will contain three sections. The first section is material, loading and allowable stresses, and the other two are dimensions and results. The values are the ones calculated by excel solver. Excel solver was used to minimize the jig weight. This was achieved by setting constraints on stresses and deflections to ensure that stresses were below allowable strength and deflections were below an inch. Deflections greater than an inch were deemed to be detrimental to the roof assembly process by the design team. The Excel solver then optimized the dimensions that were selected as variables to minimize weight. The solver accounted for bending stress, tensile stress, compressive stress, shear stress, torsion, linear momentum force, deflection, resultant bending stress, rotation, buckling, combined loading and max shear and tensile stress. Combined loading takes into account loading where the part is in both tension and bending or when there's a shear force and torsion. While max shear and tensile stress take into account the resultant stress of the shear and tensile stresses. The torque value used for torsion was 1200 lb-in based on a 50 lb being applied to a 24 diameter wheel. While the linear momentum force to design the part for an impact of 250kg*m/s was 0.11 kips based on impact time of 0.5 s.

D.2.1 – Rib Analysis

For the rib the worst case scenario occurs when all the loading is on the angled portion of the rib. The values shown in TABLE D11 are based on this worst case scenario.

TABLE D11 RIB ANALYSIS TABLE

Material, Loading and Allowable Stresses	**Results**

Material:	CSA G40.21-44W
Force of Assembly(kips):	1
Point Load on Jig(kips):	0.44
Safety Factor:	3
Linear Momentum Force(kips):	0.11
Stress Concentration Factor:	2.5 [32]
Yield Strength with SF and stress concentration factor(ksi):	5.87
Shear Strength with SF and stress concentration(ksi):	3.39
Torque (lb-in):	1200

Rib Compressive Stress (ksi):	0.08
Rib Tensile Stress (ksi):	0.11
Side Bar Shear Stress(ksi):	0.16
Bending Moment (kip.in)	2.30
Bending Stress(ksi):	5.75
Torsional Stress (ksi):	0.01
Combined Tensile Stress(ksi):	5.86
Combined Shear Stress(ksi):	0.16
Max Tensile Stress(ksi):	5.87
Max Shear Stress(ksi):	2.94
Max Deflection(in.):	-8.56E-04
Linear Momentum Shear stress(ksi):	0.15
Linear Momentum Bending stress(ksi):	2.80

Dimensions

Rib Length (in):	46.36
Rib Width (in):	0.25
Rib Thickness (in):	3.10
Selected Rib Thickness (in):	3.2

D.2.2 – Bar Analysis

For the bar, the analysis lead to the same dimensions for top and bottom bar. For the top and bottom bar in the jig, loading accounted for the variation in loading due to rotation. The values shown in TABLE are based on this loading for the top bar.

TABLE D12 TOP BAR ANALYSIS TABLE

Material, Loading and Allowable Stresses		**Results**	
Material:	CSA G40.21-44W	Bar Compressive Stress (ksi):	3.65E-03
		Bar Long Face Tensile Stress	3.65E-03

Yield Strength(ksi):	44
Shear Strength(ksi):	25.39
Force of Assembly(kips):	1
Safety Factor:	3
Linear Momentum Force(kips):	0.11
Torque (lb-in):	1200
Max load @ 0º (kips):	0.69
Max load @ 90º (kips):	0.77
Yield Strength with Safety Factor(ksi):	14.67
Shear Strength with Safety Factor(ksi):	8.46

(ksi):	
Bar Cross Section Tensile Stress (ksi):	0.04
Bar Shear Stress(ksi):	0.56
Bending Moment-x axis (kips.in)	27.61
Bending Stress(ksi):	0.24
Bending Moment-z axis (kips.in)	12.28
Bending Stress(ksi):	14.49
Bending Moment-y axis (kips.in)	10.97
Bending Stress(ksi):	5.75
Resultant Bending Stress x & z(ksi):	14.49
Torsional Stress (ksi):	1.27
Combined Tensile Stress side face(ksi):	14.49
Combined Tensile Stress #2 (ksi):	14.53
Combined Shear Stress(ksi):	1.39
Max Tensile Stress(ksi):	14.66
Max Shear Stress(ksi):	7.40
Max Rotation(degree):	-1.42
Max Deflection y-direction (in):	-0.33
Max Deflection z-direction(in):	-1.00
Linear Momentum Shear stress(ksi):	0.04
Linear Momentum Bending stress(ksi):	0.25

Dimensions

Top Bar Length (in):	192.00
Top Bar Width (in):	1.43
Top Bar Thickness (in):	1.89
Selected Width (in):	1.50
Selected Thickness (in):	2.00

For the bottom bar, the deflection due to the vertical load was designed to be the same as the top bar to avoid additional stress in the roof panels. A similar analysis was carried out for the bottom bar. This resulted in the bottom bar having the same dimensions as the top bar.

D.2.3 – Lifting Lug Analysis

For the lifting lug analysis there are two main components that require design. The lifting lug pin needs to be analysed to ensure it can handle the shear stress acting on the pin. Based on the fact that the lifting lug pin needs to be around a 3 in. diameter, as this is the size of the existing roof lifting lug, the pin is more than capable of the 1000 lb loading applied to the jig. The second component is the jig lifting lug itself. This lifting lug was designed for the scenario of loading at 90 degrees, as this is the worst case scenario. The horizontal load on one lifting lug was calculated to be 0.28 kips. The limiting stress was then found to be bending stress due to a bending moment of 2.832kips*in. . The stress in the lifting lug was designed to have an allowable stress of 4.89 ksi based on CSA G40.21-44W yield strength, a safety factor of 3 and a stress concentration of 3 [10]. The dimension that was variable for the lifting lug was thickness and this resulted in a calculated thickness of 0.8463in.. The next available size for a steel plate was 0.875 in..

D.2.4 – Jig Sides Analysis

For the sides of the jig, the limiting stress is due to the moment that the bars apply to the side plate. The moment created by 0 degree loading is 27.04kips*in on the side plate. This results in the part being designed to the allowable yield strength of 14.67 ksi based on CSA G40.21-44W yield strength and a safety factor of 3. This resulted in a calculated thickness of 0.81 in. and selected thickness of 0.8125 in..

D.2.5 – Shaft and Flange Analysis

For the shaft and flange, 4340 steel was used. For the shaft, the analysis of the diameter of the shaft was determined using the same formula found for calculating the shaft in the fork and jig rotation analysis section. The shaft shearing force in this case was 1.58 kips and along with the bending moment of the sides of the jig, this resulted in a resultant bending moment of 49.17 kips*in.. Then endurance limit with factors of 22.46 ksi was calculated, based on a reliability factor of 0.9, size factor of 0.8 and a material factor of 0.8 [10]. The shaft diameter was then calculated to be 4 in. diameter.

For the flange, a diameter of 9 in. was selected to allow for a sufficient moment of inertia to reduce bending stress and to allow for a reduced stress concentration. A safety factor of 3 was

used for the flange. As well, a stress concentration of 2.64 was used for the flange [33]. Based on the resultant bending moment mentioned above this resulted in a flange diameter of 0.6875 in. to ensure the flange bearing stress was below the allowable yield strength of 4340 steel.

D.2.6 – Fork Pocket Analysis

For the fork pocket, a 10x6 in. rectangular tubing was selected as this allows for a suitable area for a fork lift fork. This rectangular tubing is below the yield strength of CSA G40.21-44W with a safety factor of 3.

For the supports that hold the fork pocket to the jig, the stands were designed to allow for loading in all scenarios while in the articulating jig, as this would be the worst case scenario. The limiting stress in this case was the bending moment due to the load at 90 degrees. Based on a load of 0.56 kips this resulted in a bending moment of 13.8 kips*in.. This resulted in the part being designed to a width of 1.05 in. x 6 in., as the bending stress equalled the allowable yield stress for CSA G40.21-44W.

D.2.7 – Truss Locator Analysis

For the truss locator, the load acting on the truss locator would be the force to pull the locator from the magnet and the force of gravity on the locator. Based on a magnet force of 17 lb a bending moment of 0.375 kips*in was determined which resulted in a selected thickness of 0.375 in. for the truss locator to ensure it was below the allowable yield strength of CSA G40.21-44W. A safety factor of 2 and stress concentration 1.5 was used for the truss locator.

D.3 – Vertical Stabilization Analysis

D.3.1 – Vertical Trolley

The vertical trolley analysis must come before the horizontal trolley analysis, as the vertical section will be applying a force on the horizontal trolley and we require it for that section. We will first calculate the deflection of the vertical support guide in the worst case scenario for deflection, when the jig is fully loaded and in the lowest position. From this we will find the deflection of the beam, and the moment being applied to the horizontal trolley. This analysis is shown in D9 and Figure D10.

Bending & Stresses in the Main guide

Worst Case: 8'x16' roof loaded, vertical trolley in Lowest Position.

Check: - Deflection of Guide Column
- Stress in guide Column.

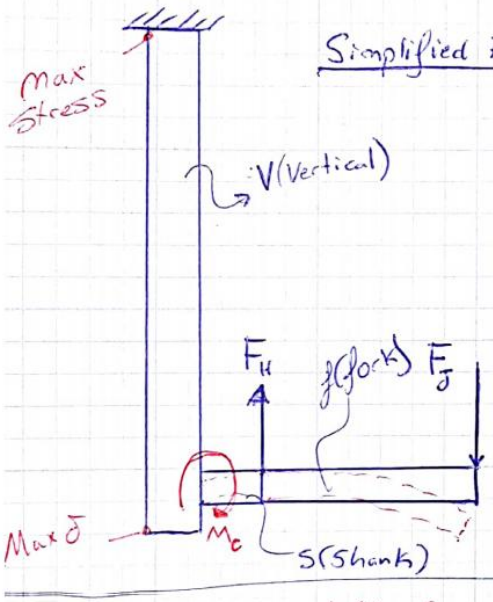

Simplified FBD

$F_J = F_H = 2200\ lbs\ (8 \times 16 + SF)$

M_c = Moment created on Vertical. Find this → Find deflect.

All materials: $\sigma_y = 44$ ksi

$\tau_{max} = 25.4$ ksi

$E = 29000$ ksi

Steps: fork analysis
Shank analysis
Vertical analysis.

★ Note, deflection of the fork is shown in the fork analysis section.

Fork (1 Tine) (Point Load)

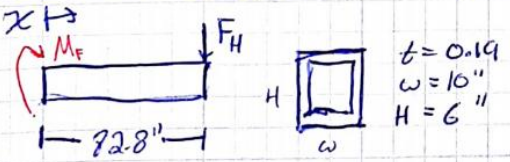

$$I_f = \frac{(10)(6^3) - (9.62)(5.62^3)}{12} = 37.7\ in^4$$

~~$F_H = 2200\ lbs$ (Roof 2.2 = 3000 lbs~~

$F_H = 2200\ lbs = 2.2$ Kips.
$= 1.1$ per Tine

$M_{F_1} = F_H \cdot L = 1.1(82.8") = 91.1$ Kip-in.

For total: 182.2 Kip-in.

Figure D9. Deflection of Main Guide Analysis (1/2)

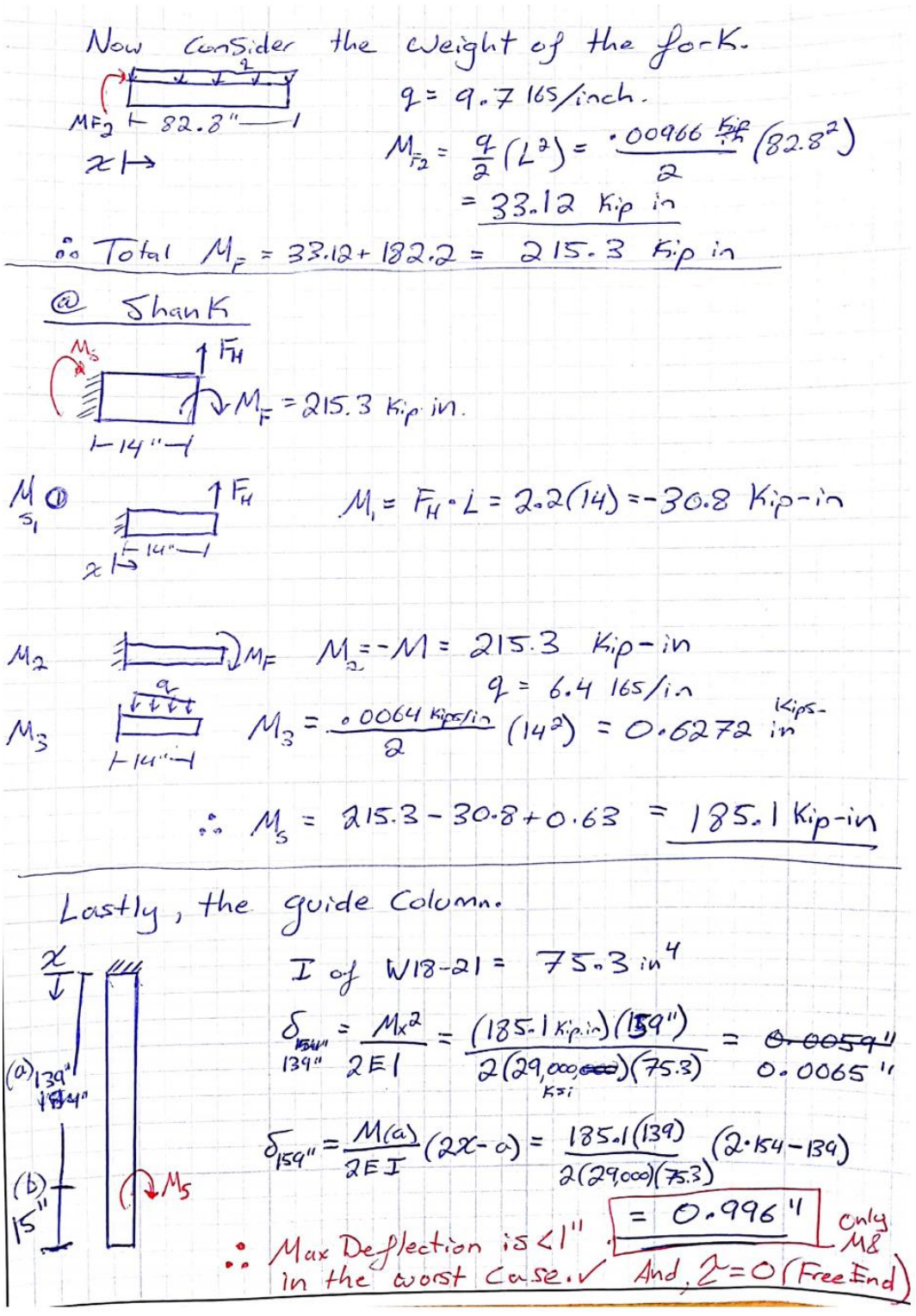

Figure D10. Deflection of Guide Column (2/2)

This analysis shows that in the worst case scenario the vertical guide column will deflect 0.996 in. at its base, which is less than our goal of a maximum 1 in. It also shows that the moment being applied on the vertical column, and therefore on the horizontal trolley, is 185.1 kip-in. This value will be used in the horizontal trolley analysis to determine the required support plate thickness.

D.3.2 – Horizontal Trolley

There are four considerations for analysis on the horizontal trolley: The trolley frame plate thickness, the hoist pin diameter, the pushing force required to move the assembly, and the vertical guide column support plate thickness. First, the trolley frame plate thickness and the hoist diameter are analysed. They are analysed together as we are looking for the maximum shear stress and maximum bearing stress at their contact point, and the analysis depends on both of their dimensions. Figure D11 shows this analysis.

Trolley Frame Thickness & Hoist Pin Ø

τ_{max} for our Mat'l = 25.4 ksi (pin + plate)

Two considerations: Shear & Bearing Stress.

$$\tau = \frac{\text{Force} \cdot 4}{\pi d^2}, \quad \sigma_B = \frac{\text{Force}}{t \cdot d}$$

Force = Roof + Jig + Fork + S.F = 5,000 lbs

t = plate thickness

d = pin diameter.

- Start with an arbitrary $t = 0.5"$, $d = 1"$, to determine limiting value.

$$\tau_{max} = \frac{5000 \text{ lbs} \cdot 4}{\pi (1"^2)} = 6.37 \text{ ksi}$$

$$\sigma_B = \frac{5000 \text{ lbs}}{0.25" \cdot 1"} = 20.0 \text{ ksi} \rightarrow \underline{\text{limiting Factor}}$$

Using $\sigma_{B_{max}} = 25.4$ ksi, $25.4 \text{ ksi} = \frac{5,000 \text{ lbs}}{t \cdot d}$

$$t \cdot d \geq 0.19685$$

∴ we will select a pin dia. of $\boxed{1"}$ to find minimum plate thickness.

$$t \geq \frac{.19685}{1} = 0.19685" \text{ (minimum)}$$

We select the next highest available plate size of $\boxed{0.25"}$

This yields: $\sigma_B = \frac{5000 \text{ lbs}}{.25" \cdot 1"} = 20 \text{ ksi} < 25.4 \text{ ksi}$

$$\tau_{max} = \frac{5000 \text{ lbs} (4)}{\pi (1^2)} = 6.37 \text{ ksi} < 25.4 \text{ ksi}$$

Figure D11. Hoist Pin and Horizontal Trolley Plate Analysis

Therefore a pin diameter of 1 in. is chosen, and a plate thickness of 0.25 in..

Next the vertical guide column is analysed. In the horizontal trolley analysis section, it was found that in the worst-case scenario, a moment of 185.1 kip-in is applied on the horizontal trolley. The support plate thickness must be confirmed, such that the applied moment does not exceed the plates shear stress limit, and that the moment doesn't cause problematic deflection (tilt of the jig). This analysis is shown in Figure D12 and Figure D13.

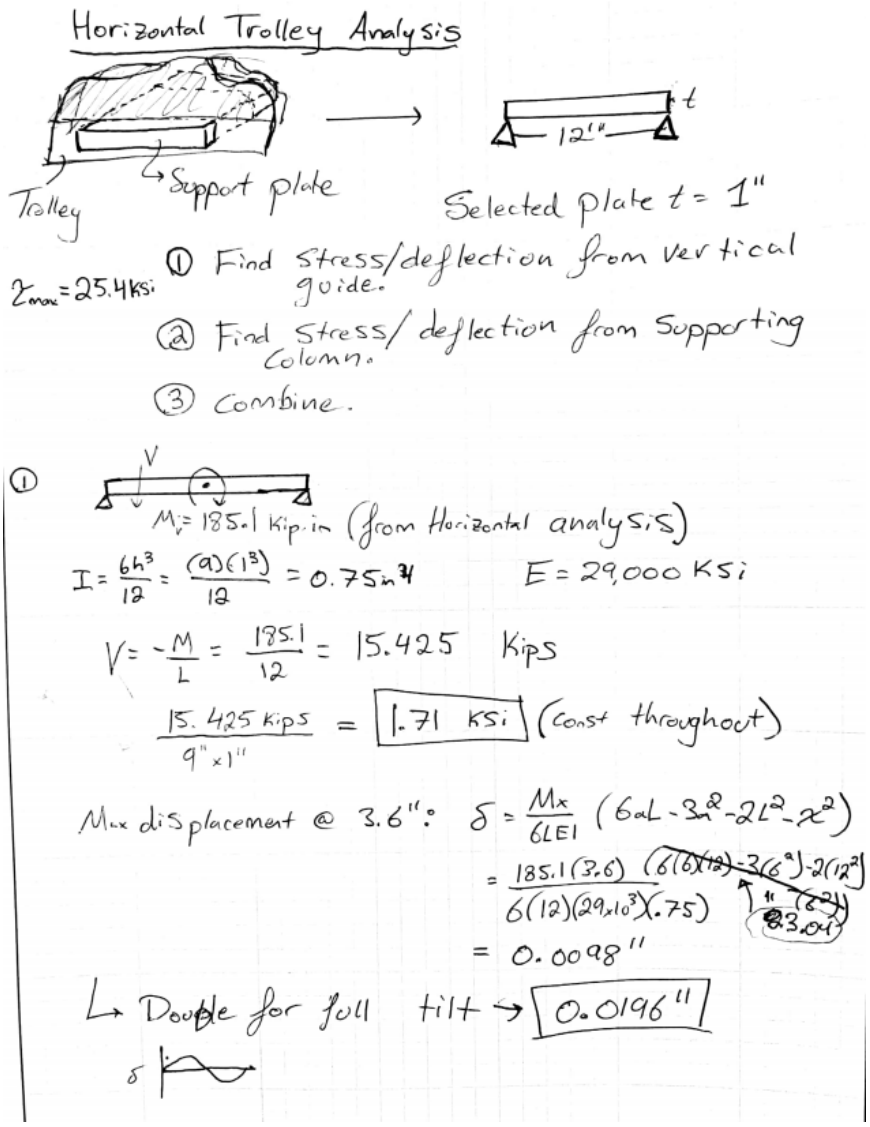

Figure D12. Horizontal Trolley Analysis (1/2)

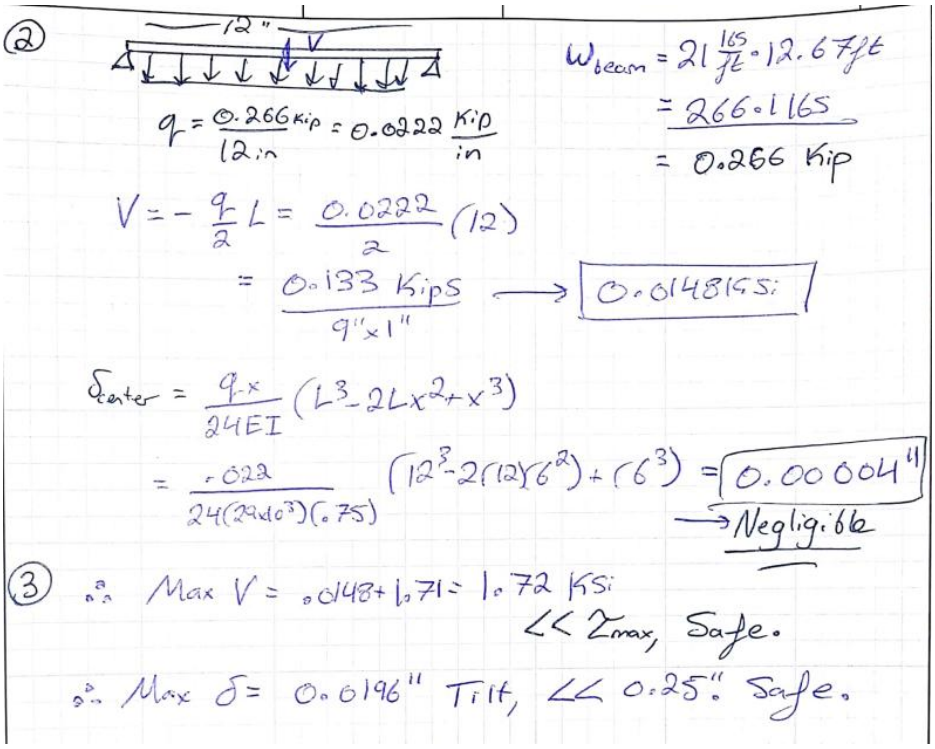

Figure D13. Horizontal Trolley Analysis (2/2)

This analysis found the maximum stress in the support plate to be 1.72 ksi, with a maximum deflection of 0.0196 in. (tilt total). Both of these values are well within reason and therefore our selected support plate dimensions stand.Finally, the force required to move the horizontal trolley is analysed in FigureD14.

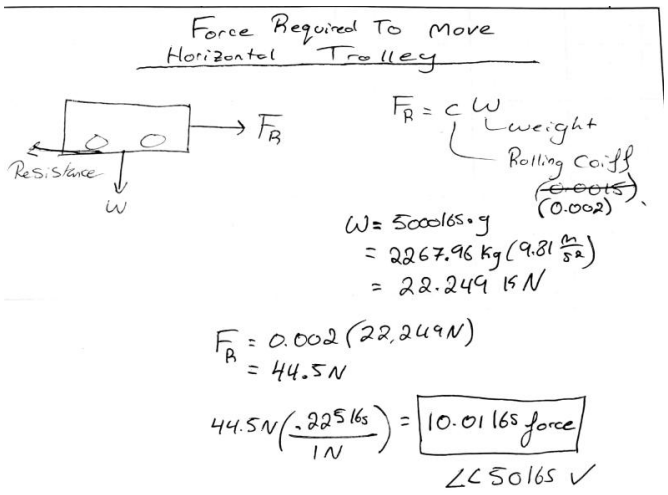

Figure D14. Force Required to Move Horizontal Trolley Analysis

It's found that the force required to move the trolley is 10.01 lbs force, which is under our requirement of 50 lbs force.

D.4 – Jib Crane Analysis

The following section details a brief summary of the analysis of the jib crane section of the design. The jib crane was split into three main sections, as seen in figure D15. This was mainly done for ease of installation.

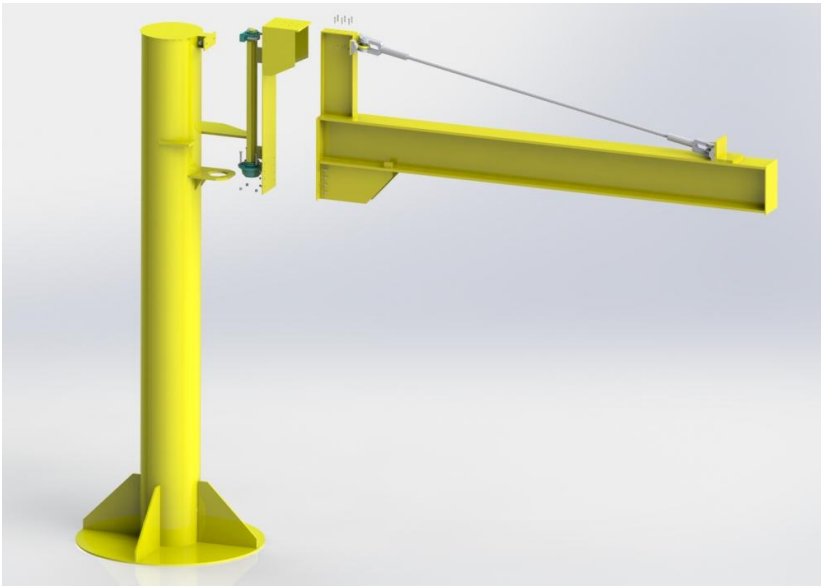

Figure D15 Exploded jib crane.

The entire jib crane analysis was broken up into smaller bodies to determine reaction forces caused by the load applied to the trolley. Two major scenarios were considered throughout the jib crane analysis. The first was when the trolley was at the furthest end of the horizontal beam. The second was when the trolley was at the mast column end of the horizontal beam. Both scenarios were analyzed with an 8'x16' roof in the jig, as well as with an empty jig. These four loading cases were analyzed to determine ranges of stress that the jib crane would experience. The ranges were then used to ensure that the stress amplitudes of those ranges would not exceed the endurance limits of their respective material. The jib crane structure was analyzed in a systematic fashion starting with the trolley load on the horizontal beam and finishing with the resultant forces at the mast column base.

The horizontal beam was the first section to be analyzed. The free body diagram of the horizontal beam supporting the trolley load at its far end can be seen in figure D16.

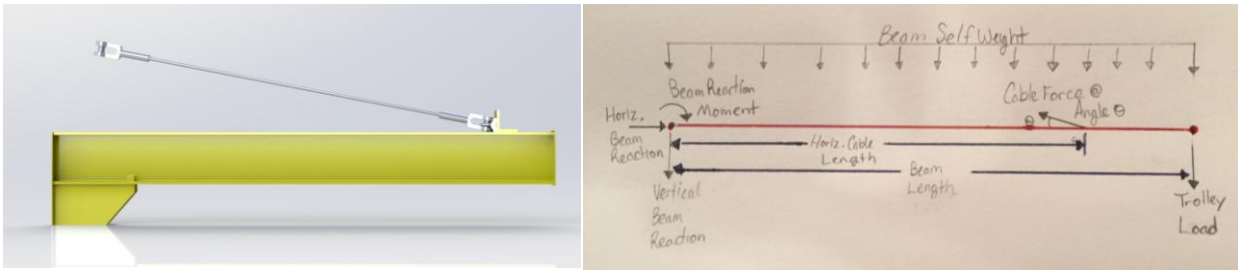

Figure D16. Horizontal beam FBD with trolley load at far end.

The resultant forces from this scenario can be seen in table D13.

TABLE D13 HORIZONTAL BEAM REACTION FORCES WITH TROLLEY AT END OF BEAM

Trolley Load and Position	**Trolley at Far End with Roof in Jig**			**Trolley at Far End without Roof in Jig**		
Force	**Magnitude**	**Unit**	**Direction**	**Magnitude**	**Unit**	**Direction**
Trolley Load	5,731	lb_f	Down	4,631	lb_f	Down
Cable Force	37,070	lb_f	Tension	26,520	lb_f	Tension
Beam Self-weight	10.91	lb_f/in	Down	10.91	lb_f/in	Down
Beam Horiz. Reaction	36,140	lb_f	Away from mast	25,860	lb_f	Away from mast
Beam Vert. Reaction	564.5	lb_f	Down	675.0	lb_f	Up
Beam Reaction Moment	48,680	in·lb_f	C.W.	107,600	in·lb_f	C.C.W.

The weight of the roof in the jig causes a greater deflection at the end of the beam when the trolley is at the end of the beam. Notice that some of the resultant directions change once the roof is removed. This is because of the weight of the beam being transferred to the reaction point.

The free body diagram of the horizontal beam supporting the trolley load at the closest end can be seen in figure D17.

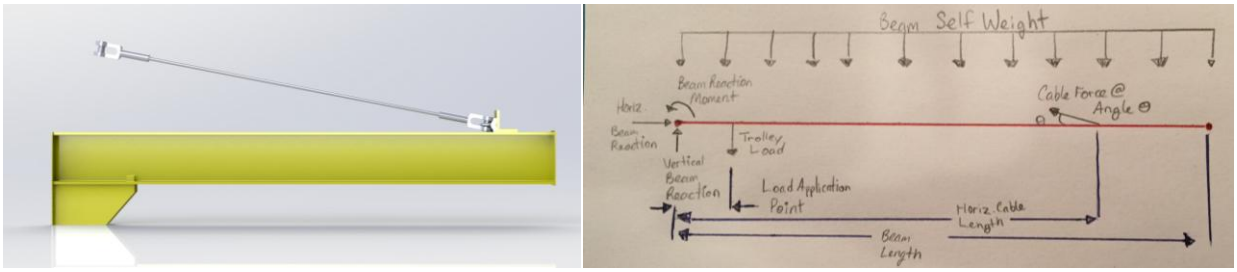

Figure D17 Horizontal beam FBD with trolley load at close end.

The resultant forces from this scenario can be seen in table D14. All directions are the same as shown in the free body diagram.

TABLE D14 HORIZONTAL BEAM REACTION FORCES WITH TROLLEY AT MAST END OF BEAM

Trolley Load and Position	**Trolley at Mast End with Roof in Jig**		**Trolley at Mast End without Roof in Jig**	
Force	**Magnitude**	**Unit**	**Magnitude**	**Unit**
Trolley Load	5,731	lb_f	4,631	lb_f
Cable Force	4,907	lb_f	4,785	lb_f
Beam Self-weight	10.91	lb_f/in	10.91	lb_f/in
Beam Horiz. Reaction	4,785	lb_f	25,860	lb_f
Beam Vert. Reaction	6,573	lb_f	5,500	lb_f
Beam Reaction Moment	110,700	$in \cdot lb_f$	94,940	$in \cdot lb_f$

The horizontal beam was sized based on yielding a minimum deflection, but the stresses were nonetheless computed to check for signs of possible fatigue failure. Based on the minimum and maximum reaction forces in the horizontal beam, the minimum and maximum amount of bending stress the W18 x 119 horizontal beam's mast end joint would see would be **0.480 ksi** when the roof was in the jig closest to the mast. The minimum amount of stress joint would see would be **-0.211 ksi** when the roof was in the jig and the trolley was at the far end of the beam. The greatest stress in the beam provides a factor of safety of 89, considering that the tensile yield strength of the I-beam is 42.7 ksi. The maximum deflection in the beam occurred at the far end of the beam when the trolley was located at that point with a roof in the jig. The maximum theoretical deflection was determined to be **0.189 in**. CMAA specification 70 states that the maximum deflection in a crane girder should be no more than 1/888 of its span [11]. If the

horizontal beam were to be considered a girder, than this deflection would be appropriate for all loading scenarios.

The I-beam used to support the tension in the wire rope and connect the horizontal beam to the upper bolt connection was sized to be W14 x 22 beam. It's free body diagram of when the trolley is at the far end of the horizontal beam can be seen in figure D18.

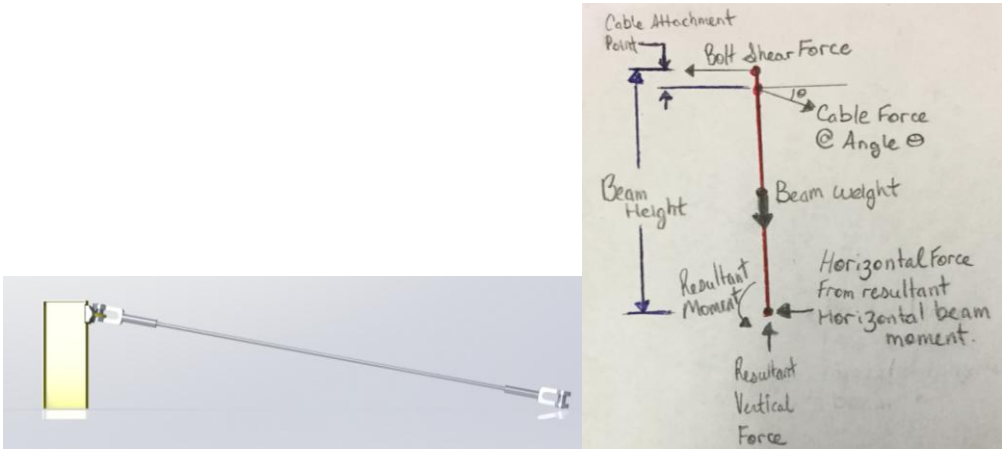

Figure D18 Vertical support beam FBD with trolley load at far end.

The resultant forces from this free body diagram can be seen in table D15. All directions correspond to the figure D18.

TABLE D15 VERTICAL SUPPORT BEAM REACTION FORCES WITH TROLLEY AT END OF BEAM

Trolley Load and Position	**Trolley at Far End with Roof in Jig**		**Trolley at Far End without Roof in Jig**	
Force	**Magnitude**	**Unit**	**Magnitude**	**Unit**
Bolt Shear Force	29,790	lb_f	21,320	lb_f
Cable Force	37,070	lb_f	26,520	lb_f
Beam Self-weight	62.33	lb_f	62.33	lb_f
Beam Horiz. Reaction	2,562	lb_f	5660 opposite direction	lb_f
Beam Vert. Reaction	8,281	lb_f	5,942	lb_f
Beam Reaction Moment	71,290	$in \cdot lb_f$	51,010	$in \cdot lb_f$

When the trolley was located at the mast end of the horizontal beam, the directions of the reaction forces can be seen in the figure D19.

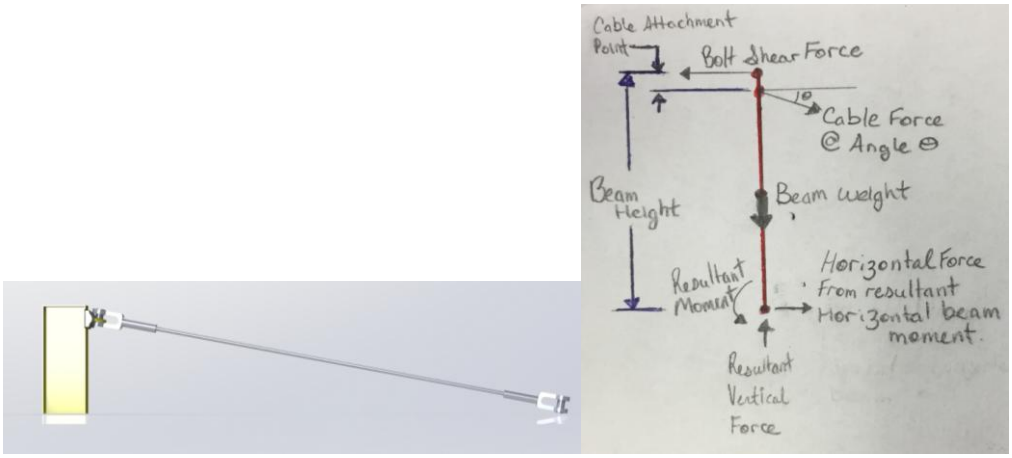

Figure D19 Vertical support beam FBD with trolley load at close end.

The magnitudes of the reaction forces based of the directions in figure D19 can be seen in table D16.

TABLE D16 VERTICAL SUPPORT BEAM REACTION FORCES WITH TROLLEY AT MAST END OF BEAM

Trolley Load and Position	**Trolley at Mast End with Roof in Jig**		**Trolley at Mast End without Roof in Jig**	
Force	**Magnitude**	**Unit**	**Magnitude**	**Unit**
Bolt Shear Force	3,944	lb_f	3,846	lb_f
Cable Force	4,907	lb_f	4,785	lb_f
Beam Self-weight	62.33	lb_f	62.33	lb_f
Beam Horiz. Reaction	251.8	lb_f	245.6	lb_f
Beam Vert. Reaction	1,144	lb_f	1,117	lb_f
Beam Reaction Moment	9,437	$in \cdot lb_f$	9,202	$in \cdot lb_f$

The maximum bending stress in the vertically oriented W14 x 22 I-beam is **2.46 ksi** located at its base. The minimum bending stress at the same location is **0.933 ksi**. The 14 in. I-beam was chosen to provide a more rigid connection area at the mast end of the 18 in. horizontal I-beam.

A 0.188 in. plate was used on the top of the vertical W14 x 22 beam. This thickness was selected considering the maximum bolt shear force acting on six 0.5 in. grade 8 bolts. The maximum bearing stress on that plate was calculated to be **24.93ksi** while the maximum tensile stress in the plate was **14.46 ksi**.

The bolt shear force shown in figures D18 and D19 were transferred to a weldment attached to the rotation device. This weldment's free body diagram can be seen in figure D20 for the scenario when the trolley is located at the far end of the horizontal beam

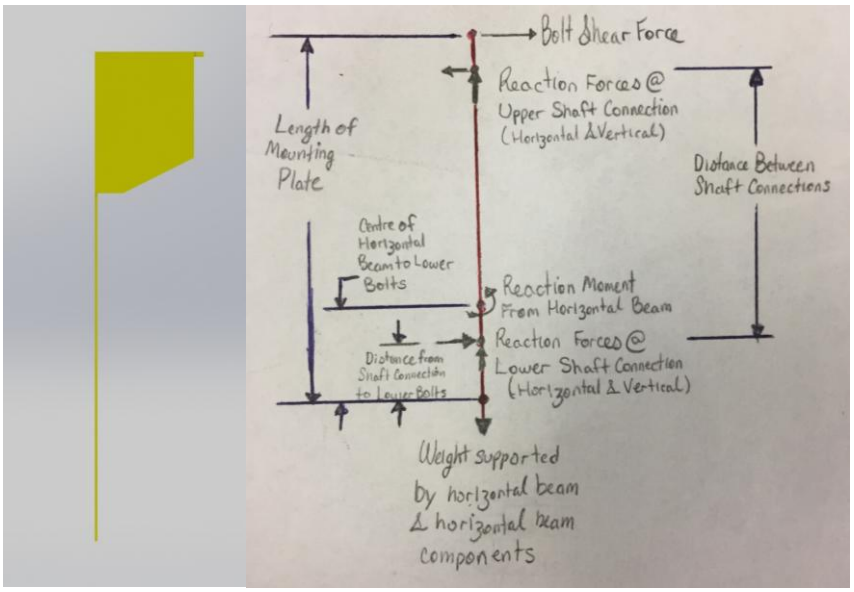

Figure D20. Rotation weldment FBD with trolley load at far end.

This weldment was attached to the horizontal beam at its bottom (via bolt connection) as well as at the top (as previously stated). The reaction moment of the horizontal beam was considered when analyzing this weldment as it acted as a backing for the horizontal beam. The resultant forces as shown in figure D20 can be seen in table D17.

TABLE D17 ROTATION WELDMENT REACTION FORCES WITH TROLLEY AT END OF BEAM

Trolley Load and Position	**Trolley at Far End with Roof in Jig**		**Trolley at Far End without Roof in Jig**	
Force	**Magnitude**	**Unit**	**Magnitude**	**Unit**
Bolt Shear Force	29,790	lb_f	21,320	lb_f
Horiz. Upper Shaft Connection	44,220	lb_f	35,200	lb_f
Horiz. Lower Shaft Connection	14,420	lb_f	13,880	lb_f
Beam Reaction Moment	48,680 C.W.	$in \cdot lb_f$	107,600 C.C.W	$in \cdot lb_f$
Weight of Horizontal Beam and Components	7,724	lb_f	4,693	lb_f

The free body diagram of the weldment for the scenario when the trolley is located at the mast end of the horizontal beam is shown in figure D21.

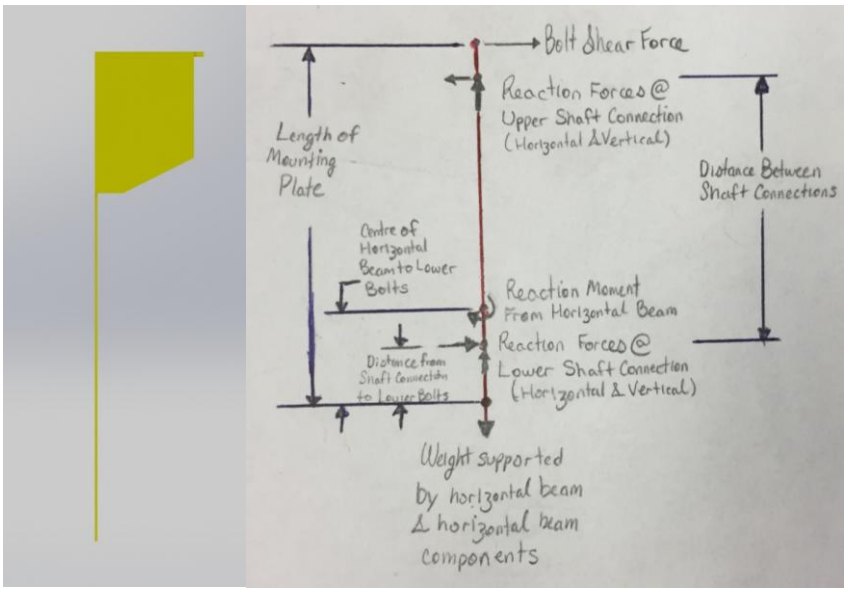

Figure D21. Rotation weldment FBD with trolley load at close end.

The only change between this scenario and when the trolley is located at the far end of the beam is the reaction moment of the horizontal beam acting against the weldment. The resultant forces can be seen in table D18.

TABLE D18 ROTATION WELDMENT REACTION FORCES WITH TROLLEY AT MAST END OF BEAM

Trolley Load and Position	**Trolley at Close End with Roof in Jig**		**Trolley at Close End without Roof in Jig**	
Force	**Magnitude**	**Unit**	**Magnitude**	**Unit**
Bolt Shear Force	3,944	lb_f	3,846	lb_f
Horiz. Upper Shaft Connection	8,782	lb_f	8,239	lb_f
Horiz. Lower Shaft Connection	21,010	lb_f	13,080	lb_f
Beam Reaction Moment	110,700	$in \cdot lb_f$	94,940	$in \cdot lb_f$
Weight of Horizontal Beam and Components	7,724	lb_f	4,693	lb_f

This mode of failure of concern in this section was the bending in the tall plate of the weldment. To minimize this potential, gussets were added below the horizontal beam to increase the moment of inertia over this area. The maximum resultant bending stress in this area was **6.648 ksi** in compression. This yielded a **factor of safety of 6.42**. Plates with smaller thicknesses could have been used in this scenario; however the team elected to remain with 0.25 in. plate just in case there was ever any off centered loading that may crease thinner plate.

The free body diagram of the shaft that was connected the weldment to the bearings allowing the jib crane to pivot can be seen in figure D22.

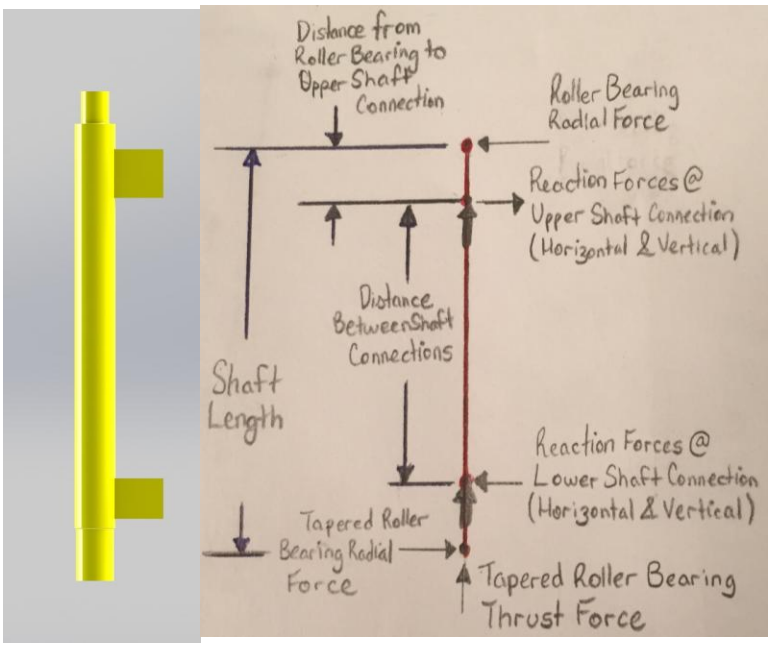

Figure D22. Rotation shaft FBD.

The resultant loads can be seen in table D19 for both loading scenarios.

TABLE D19 ROTATION SHAFT REACTION FORCES

Trolley Load and Position	**Trolley at Far End with Roof in Jig**		**Trolley at Far End without Roof in Jig**		**Trolley at Close End with Roof in Jig**		**Trolley at Close End without Roof in Jig**	
Force	**Magnitude**	**Unit**	**Magnitude**	**Unit**	**Magnitude**	**Unit**	**Magnitude**	**Unit**
Roller Bearing Radial	36,220	lb_f	28,510	lb_f	10,450	lb_f	8,899	lb_f
Horiz. Upper Shaft Connection	44,220	lb_f	35,200	lb_f	8,782	lb_f	8,239	lb_f
Horiz. Lower Shaft Connection	14,420	lb_f	13,880	lb_f	21,010	lb_f	13,080	lb_f
Tapered Bearing Radial	66,020	lb_f	49,830	lb_f	40,240	lb_f	30,220	lb_f
Tapered Bearing Thrust	8,662	lb_f	7,562	lb_f	8,662	lb_f	7,562	lb_f

Based on the values in the table above, the worst case scenario in terms of shear on the rotation shaft would be when the when the trolley is at the far end of the horizontal beam with a roof in the jig. With a stress concentration factor of 1.8 for the step in the shaft, the shear stress was **14.41** ksi. The worst case scenario for the bending stress in that shaft occurred during the same scenario. The bending stress required the addition of two stiffeners to the shaft. With the stiffeners, the worst case bending stress was **18.65** ksi. This gave a safety factor of **2.29**. Bear in

mind that although this safety factor seems low, there are also many factors multiplying the magnitude of the forces.

The final section of the jib crane analysis was the mast column. It's free body diagram can be seen in figure D23.

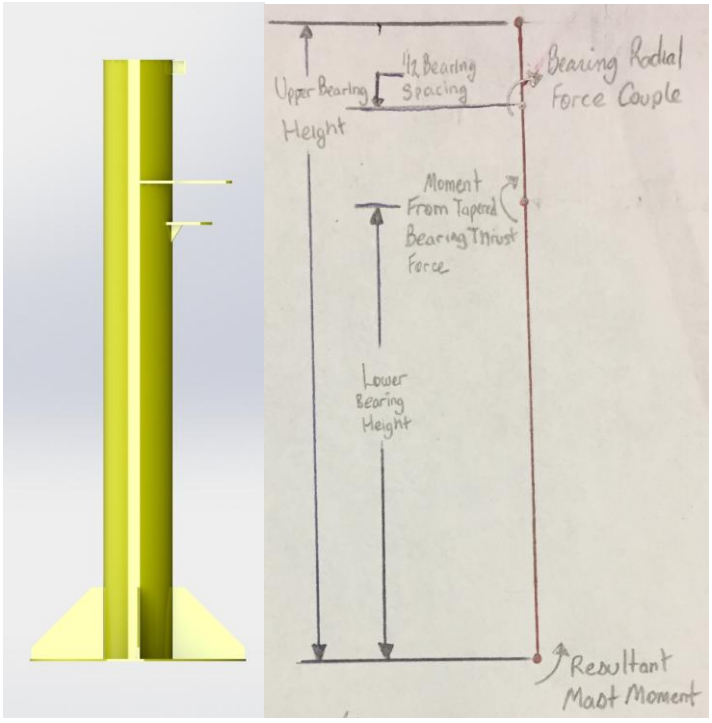

Figure D23. Mast column FBD.

Three scenarios were analyzed for the mast column. The first two were the same scenarios as the previous section, with the addition of a third collision scenario. The collision scenario considered a 250 kg object travelling at 1 m/s and colliding with the top of the mast column for 0.1 seconds. The collision was assumed to take place when the trolley was at the far end of the horizontal beam and act in the same direction as the resultant force of the roller bearing.

The two radial forces were added together to create a force couple moment, while the thrust force from the bearing was also converted to a moment as it was offset from the centreline of the mast column. The resultant moment at the base of the mast for the scenario in which the trolley is loaded at the far end and the collision scenario can be seen in table D20.

TABLE D20 MAST COLUMN REACTION FORCES

Scenario	**Moment ($in \cdot lb_f$)**	
	Roof in Jig	**No Roof in Jig**
Trolley at Far End	2,983,000	2,304,000
Trolley at Close End	1,565,000	1,225,000
Collision	4,157,000	Not considered

Notice that the resulting moment during the collision is the greatest at the base. It was for this reason that the mast column was designed for this scenario. Not only did the design team not want the beam to fail, but the team also thought that minimum deflection was also necessary so that the entire articulating jig didn't deflect, damaging the vertical guide column or anything else in the area. The maximum tensile bending stress at the base of the mast column was **8.783 ksi**, while the maximum deflection at the end of the column was **0.311 in**. The maximum deflection of the column under normal condition was **0.230 in**. CMAA specification 70 states that the maximum deflection that a girder should see is 1/888 of its span [11]. Obviously, the mast is not a crane girder, however, it was thought to be an appropriate design goal considering its considerable 237.68 in. span.

Appendix D References

[6] Brunswick Steel. (n.d.). *Reference Catalogue* [Online]. Available: SALES@BRUNSWICKSTEEL.COM. [Accessed 4 December 2017].

[7] efunda. (2017). *ASTM A366* [Online]. Available: http://www.efunda.com/materials/alloys/carbon_steels/show_carbon.cfm?ID=ASTM_A366&show_prop=all&Page_Title=ASTM%20A366. [Accessed 4 December 2017].

[8] The Engineering ToolBox. (n.d.). *Steels - Endurance Limits and Fatigue Stress* [Online]. Available: https://www.engineeringtoolbox.com/steel-endurance-limit-d_1781.html. [Accessed 4 December 2017].

[9] The Engineer ToolBox. (n.d.). *Modulus of Rigidity* [Online]. Available: https://www.engineeringtoolbox.com/modulus-rigidity-d_946.html. [Accessed 4 December 2017].

[10] R. L. Mott, *Machine Elements in Mechanical Design*, 5th ed. Upper Saddle River: Pearson, 2014.

[11] Crane Manufacturers Associtaion of America, "CMAA Specification 70," 2010.

[13] Canadian Standards Association, "Safety Code for Material Hoists," 1987.

[32] eFunda. (n.d.). *Radius* [Online]. Available: http://www.efunda.com/designstandards/plastic_design/radius.cfm. [Accessed 4 December 2017].

[33] Advanced Mechanical Engineering Solutions. (2017). *Stress Concentration Factors for Two Equal Circular Holes in an Infinite Plate* [Online]. Available: http://www.amesweb.info/StressConcentrationFactor/TwoEqualCircularHolesInInfi

nitePlate. aspx. [Accessed 4 December 2017].

Appendix E – Detailed Cost Analysis

The detailed cost analysis will be broken up into five sections, the jig assembly cost, the fork and jig rotation assembly cost, the vertical stabilization cost, the guide column cost and the jig crane assembly cost. The detailed cost will show the material cost per unit for the parts of each assembly. A table will summarize the cost of these assemblies at the end to determine the total material cost.

TABLE EI JIG ASSEMBLY DETAILED COST ANALYSIS

PART NUMBER	PART DESCRIPTION	MATERIAL	QTY	COST PER UNIT ($/unit)	TOTAL COST ($)
1-1-01	1.50" x 2.00" x 192.60" flat bar	CSA G40.21-44W	4	260.67	1,042.69 [34]
1-1-02	43.87" x 12.95" x 0.25" jig rib	CSA G40.21-44W	24	64.60	1,550.37 [35]
1-1-03	110.00" x 17.00" x 0.81" side plate	CSA G40.21-44W	2	944.65	1,889.30 [35]
1-1-04	4.00"dia. x 3.25" jig shaft	4340 steel	2	72.39	144.78 [36]
1-1-05	9.00"dia. x 0.69" flange	4340 steel	2	50.56	101.12 [35]
1-1-06	5/8"-11 square head bolt	Grade 5 steel	8	6.35	50.80 [37]
1-1-07	5/8"-11 nylon-insert locknut	Grade 5 steel	8	11.86	94.89 [37]
1-1-08	truss locator assembly		24		
1-1-08-01	4" x 3" surface mount hinge	Steel	24	5.16	123.75 [37]
1-1-08-02	7/8" dia. countersunk magnetic disk	Nickel-plated neodymium	24	12.26	294.13 [37]

1-1-08-03	5.30" x 0.38" x 3.49" truss locator body	CSA G40.21-44W	24	12.01	288.19 [35]
1-1-08-04	7.17" x 6.1" x 0.18" truss locater guide	CSA G40.21-44W	48	8.56	410.87 [35]
1-1-08-05	186n vertical handle toggle clamp	1018 carbon steel	24	14.78	354.79 [38]
1-1-08-06	0.38" x 0.93" x 3.49" plate	CSA G40.21-44W	24	1.05	25.29 [35]
1-1-09	fork pocket assembly		4		
1-1-09-01	8.00" x 3.00" x 46.53" x .188" rectangular tubing	CSA G40.21-44W	4	237.38	949.50 [39]
1-1-09-02	6.00" x 1.25" x 12.00" flat bar outer support	CSA G40.21-44W	4	640.08	2,560.32 [34]
1-1-09-04	2.21" x 1.25" x 6.00" fork pocket ramp support	CSA G40.21-44W	4	182.88	731.52 [34]
1-1-10	lifting lug assembly		5		
1-1-10-01	11.36" x 6" x 0.875" lifting lug	CSA G40.21-44W	5	29.50	147.51 [35]
1-1-10-02	1.86" x 5" x .25" lifting lug edge	CSA G40.21-44W	5	2.26	11.28 [35]
1-1-10-03	lifting lug pin assembly	CSA G40.21-44W	5		
1-1-10-03-01	lifting lug pin	CSA G40.21-44W	5	16.19	80.96 [34] [40]
1-1-10-03-02	.25" dia lifting lug pin handle	CSA G40.21-44W	5	21.97	109.86 [40]
1-1-10-04	1/2-13" square head bolt	Grade 5 steel	5	3.96	19.81 [37]

1-1-11	opposite hand lifting lug assembly		5	73.88	369.42
				TOTAL COST OF JIG ASSEMBLY:	$11,351.14 CAD

TABLE E2 FORK AND JIG ROTATION ASSEMBLY DETAILED COST ANALYSIS

PART NUMBER	PART DESCRIPTION	MATERIAL	QTY	COST PER UNIT ($/unit)	TOTAL COST ($)
1-2-01-01 & 1-2-01-04	10"x6"x0.1875", 80"lg. tubing	CSA G40.21-44W	2	242.38 [41]	484.76
1-2-01-02	4"x6"x0.5", 208.19 lg. tubing	CSA G40.21-44W	1	608.74 [41]	608.74
1-2-01-03	8"x6"x0.5", 12" lg. tubing	CSA G40.21-44W	1	60.04 [41]	60.04
1-2-02	Pillow block roller bearing unit - two-bolt base, 1.1875" id		2	216.47 [42]	432.94
1-2-03	Pillow block roller bearing unit - four-bolt base, 4.0000" id		2	1466.47 [43]	2932.94
1-2-4-05	Aluminum four spoke hand wheel	319 aluminum	1	300	300
1-2-04-06 & 1-2-04-07	Strap hinge	Zinc-plated steel	1	10.04 [37]	10.04
1-2-04-08	1/2"-13 threaded size, 5" lg. Grade 8 steel hex head screw	Zinc-aluminum coated steel	4	2.8 [37]	11.2
1-2-04-10	1/2"-13 threaded size, grade 8 steel hex nut	Zinc-aluminum coated steel	1	8.29 [37]	8.29
1-2-04-09	1/2" screw size, 316 stainless steel washer	316 stainless steel	1	8.82 [37]	8.82
1-2-04-11	3/4"-16 threaded size, 4" lg. Grade 8 steel hex head screw	Zinc-aluminum coated steel	8	5.89 [37]	47.12
1-2-04-13	3/4"-16 thread size, grade 8 steel hex nut	Zinc-aluminum coated steel	1	11.96 [37]	11.96
1-2-04-12	3/4" screw size, 316 stainless steel washer	316 stainless steel	1	9.66 [37]	9.66

1-2-04-14	5/16"-18 thread size, 1-1/4" lg. Grade 5 steel hex head screw	Zinc-plated steel	1	8.17 [37]	8.17
1-2-04-15	5/16"-18 thread size, grade 5 steel hex nut	Zinc-plated steel	1	6.44 [37]	6.44
1-2-04-16	Nonmarring encased magnet		1	23.16 [37]	23.16
1-2-01-05	Wheel lock stand 1'x1' steel plate	AISI 1020 low carbon/low tensile steel	1	26.54 [35]	26.54
1-2-04-02 & 1-2-04-03	Wheel lock plate & latch, 1'x1' steel plate	AISI 1020 low carbon/low tensile steel	1	26.54 [37]	26.54
1-2-01-07	Forged steel hoist ring for lifting	AISI 1020 low carbon/low tensile steel	1	238.31 [37]	238.31
1-2-01-09	Bearing 2 base 0.5"x3.5", 10" lg. steel flat bar	AISI 1020 low carbon/low tensile steel	1	12.43 [34]	12.43
1-2-01-08	Bearing 1 base 2"x2", 8" lg steel square bar	AISI 1020 low carbon/low tensile steel	1	23.6 [44]	23.6
1-2-01-06	Lifting lug base 4" x 4" x 3" steel plate	AISI 1020 low carbon/low tensile steel	1	67.78 [35]	67.78
1-2-04-01 & 1-2-04-04	Three-stage stepped shaft	4340 steel hb275	1	755 [45]	755
TOTAL COST OF FORK AND ROTATION JIG ASSEMBLY:					$7765.39

TABLE E3 GUIDE COLUMN ASSEMBLY COST ANALYSIS

PART NUMBER	PART DESCRIPTION	MATERIAL/ PURCHASE UNIT	QTY	COST PER UNIT ($/unit)	TOTAL COST($)
1-3-01	W18x21 I beam	CSA G40.21-44W (ft)	12.6	23.62 [46]	$297.61
1-3-02	Trolley frame rhs	0.25" CSA G40.21-44W (ft^2)	0.67	17.76 [35]	$11.90
1-3-03	Trolley frame lhs	0.25" CSA G40.21-44W (ft^2)	0.67	17.76 [47]	$11.90
1-3-04	Threaded flanged track roller	Steel (ea)	4	73.11 [37]	$292.44
1-3-05	1"-14 hex nut	Grade 8 steel (ea)	4	1.88 [37]	$7.52
1-3-06	0.5"-13 square head bold	Grade 8 steel (pkg 10 min)	1	7.54 [37]	$7.54
1-3-07	0.5" spacer	Steel (ea)	4	10.91 [35]	$43.64
1-3-08	0.5"-13 hex nut	Grade 9 steel (pkg 10 min)	1	8.98 [37]	$8.98
1-3-09	Push handle	1" rod CSA G40.21-44W (ft)	13	5.34 [35]	$69.42
1-3-10	Vertical column connection plate	1" CSA G40.21-44W (ft^2)	1	53.09 [35]	$53.09
1-3-11	Nonsparking wedge	Aluminum-bronze (ea)	2	10.42 [37]	$20.84
1-3-12	Trolley stoppers - 1" plate	1" CSA G40.21-44W (ft^2)	0.11	53.09 [35]	$5.84
1-3-13	Adjustable eccentric track roller	Varies	4	39.00 [37]	$156.00
1-3-14	0.625"-18 hex nut	Grade 8 steel (ea)	4	16.62 [37]	$66.48
1-3-15	Trolley faceplate front	0.25" CSA G40.21-44W (ft^2)	0.67	17.76 [35]	$11.90
1-3-16	Trolley faceplate back	0.25" CSA G40.21-44W (ft^2)	0.58	17.76 [35]	$10.30
TOTAL COST OF GUIDE COLUMN ASSEMBLY:					$1360.25 CAD

TABLE E4 HORIZONTAL TROLLEY DETAILED COST ANALYSIS

PART NUMBER	PART DESCRIPTION	MATERIAL/ PURCHASE UNIT	QTY	COST PER UNIT ($/unit)	TOTAL COST($)
1-4-01	Trolley frame lhs	0.25" CSA G40.21-44W (ft^2)	2.74	17.76 [35]	$48.66
1-4-02	Rolley frame rhs	0.25" CSA G40.21-44W (ft^2)	2.74	17.76 [35]	$48.66

1-4-03	Flanged threaded track roller	Steel (ea)	6	117.08 [37]	$702.48
1-4-04	1.25"-12 nylon insert locknut	Grade 8 steel (ea)	6	10.08 [37]	$60.48
1-4-05	Hoist pin support	1" rod CSA G40.21-44W (ft)	1.33	5.34 [35]	$7.10
1-4-06	1"-6 nylon insert locknut	Grade 8 steel locknut (ea)	2	1.76 [37]	$3.52
1-4-07	6600 lb capacity electric hoist	Varies (ea)	1	4415.72 [37]	$4,415.72
TOTAL COST OF HORIZONTAL TROLLEY ASSEMBLY:					$6704.02 CAD

TABLE E5 JIB CRANE DETAILED COST ANALYSIS

PART NUMBER	DESCRIPTION	MATERIAL	QTY.	Cost per	Unit	Total Cost
1-5-01-01	W18 x 50 x 196.50" lg	CSA G40.21-44W	1	$ 900.00 [41]	20'	$ 900.00
1-5-01-04	W14 x 22 beam x 34.00" lg	CSA G40.21-44W	1	$ 396.00 [41]	per 20 ft	$ 396.00
1-5-01-02	34.00" x 14.00" x 0.19" Plate	CSA G40.21-44W	1	$ 211.52	4'x8' plate	$ 211.52
1-5-02-03	20.00" x 14.00" x 0.19" plate	CSA G40.21-44W	2			
1-5-03-07	25.00" dia. X .19" plate	CSA G40.21-44W	1			
1-5-01-07	12.00" x 6.00" x .25" plate	CSA G40.21-44W	1	$ 17.76	1'x2' plate	$ 17.76
1-5-03-06	4.25" x 2.00" x .25" plate	CSA G40.21-44W	4			
1-5-01-05	13.75" x 5.00" x .38" plate	CSA G40.21-44W	1	$ 286.72	2'x8' plate	$ 286.72
1-5-02-02	69.13" x 14.00" x 0.38" plate	CSA G40.21-44W	1			
1-5-01-12	20.00" x 12.00" x 0.50" plate	CSA G40.21-44W	1	$ 106.16	1'x2' plate	$ 106.16
1-5-03-03	12.00" x 5.00" x .50" plate	CSA G40.21-44W	1			
1-5-02-01	15.00" x 14.00" x 0.75" plate	CSA G40.21-44W	1	$ 1,378.00	per 5x10'	$ 1,378.00
1-5-03-09	75.00" dia x .75" plate	CSA G40.21-44W	1	$ 1,500.00	estimate	$ 1,500.00
1-5-03-08	25.00" x 25.00" x .75" plate	CSA G40.21-44W	4			

1-5-03-04	14.00" x 16.00" x1.00" plate	CSA G40.21-44W	1	$ 424.72	per 2x4'	$ 424.72
1-5-03-05	6.00" x 4.00" x 1.00" plate	CSA G40.21-44W	2	$ 1,837.50	per 5x10'	$ 9,187.50
1-5-03-02	4.00" x 5.00" x 1.00" plate	CSA G40.21-44W	1			
1-5-03-10	36.00" x 14.00" x 1.00" plate	CSA G40.21-44W	1			
1-5-03-11	12.75" x 8.00" x 1.00" plate	CSA G40.21-44W	1			
1-5-01-13	3.00" x 2.00" x 2.00" plate	CSA G40.21-44W	2	$ 45.80	per 2"x2"x2'	$ 45.80
1-5-02-09	2.00" x 1.25" x 49.63" bar	CSA G40.21-44W	2	$ 165.70	per 10'	$ 165.70
1-5-02-04	4.25" dia x 60.25" lg round	CSA G40.21-44W	1	$ 618.07	per 6'	$ 618.07 [48]
1-5-03-01	24" sch 80 pipe x 208.50" lg	CSA G40.21-44W	1	$ 65.00	per 1'	$ 1,170.00
1-05-01-08	16t weld-on load ring		1	$ 400.00	per unit	$ 400.00
1-05-01-06	16t weld-on load ring		1	$ 400.00	per unit	$ 400.00
1-05-01-09	36 mm swaged wire rope socket		2	$ 350.00	per unit	$ 700.00
1-5-01-10	36 mm wire rope x 132.00" lg		11	$ 7.92	per 1'	$ 87.12
1-5-01-11	8.00" x 8.00" x 1.13" thk x 10.50" lg angle		1	$ 249.50	per 2'	$ 249.50 [49]
1-5-02-07	P2B-S2-215RE roller bearing w/ pillow block housing		1	$ 700.83	per unit	$ 700.83 [50]
1-5-02-08	FC-E-315R tapered roller bearing w/ flanged housing		1	$ 1,726.59	per unit	$ 1,726.59 [51]
1-5-04	0.75"-10 x 4.25" lg hex hd bolt	Grade 8	4	$ 4.97	per	$ 19.88
1-5-05	0.75"-10 nylock nut	Grade 8	4	$ 5.65	per 5	$ 5.65
1-5-06	0.5"-13 hex hd bolt	Grade 8	6	$ 10.41	per 10	$ 20.82
1-5-07	0.5"-13 nylock nut	Grade 8	14	$ 4.31	per 10	$ 8.62

1-5-08	0.5-13" x 1.5" lg hex hd bolt	Grade 8	8	$ 8.47	per 10	$ 16.94
1-5-09	0.875"-9 x 3.5" lg hex hd bolt	Grade 8	2	$ 3.95	per	$ 7.90
1-5-10	0.875"-9 nylock nut	Grade 8	2	$ 3.55	per	$ 7.10
TOTAL COST OF JIB CRANE ASSEMBLY:						$ 26383.67

All plate and bar prices cited from Metal Depot [47].

All hardware cited from McMaster Carr [37].

All lifting products were obtained over the phone with Saturn Industries.

The total cost of the final articulating jig design can be seen in table E6 below.

TABLE E6 ARTICULATING JIG COST SUMMARY

PART NUMBER	**PART DESCRIPTION**	**COST($)**
1-1	Jig assembly	11,351.14
1-2	Fork and jig rotation assembly	7,765.39
1-4	Horizontal trolley assembly	6,704.02
1-3	Guide column assembly	1,360.25
1-5	Jib crane assembly	26,383.67
Total design material cost:		**53,564.47**

Appendix E References

[34]

[35] MetalsDepot. (2017). *Steel Plate* [Online]. Available: https://www.metalsdepot.com/steel-products/steel-plate. [Accessed 5 December 2017].

[36] MetalsDepot. (2017). *4140 Alloy Round Bar* [Online]. Available: https://www.metalsdepot.com/alloy-steel-products/4140-alloy-round-bar. [Accessed 5 December 2017].

[37] McMaster-Carr. (n.d.). *McMaster-Carr* [Online]. Available: https://www.mcmaster.com/. [Accessed 5 December 2017].

[38] Misumi. (n.d.). *Toggel Clamps - Vertical Handle, Long Arm Type* [Online]. Available: https://us.misumiec.com/vona2/detail/110302029760/?CategorySpec=unitType%3a%3a1%0900000043807%3a%3aa&Inch=0. [Accessed 5 December 2017].

[39] MetalsDepot. (2017). *Steel Rectangle Tube A513 / A500* [Online]. Available: https://www.metalsdepot.com/steel-products/steel-rectangle-tube. [Accessed 5 December 2017].

[40] MetalsDepot. (2017). *A36 Steel Round Bar* [Online]. Available: https://www.metalsdepot.com/steel-products/steel-round-bar. [Accessed 5 December 2017].

[41] Discount Steel. (2017). *Tube/Pipe* [Online]. Available: https://www.discountsteel.com/items/tube_Pipe.cfm. [Accessed 5 December 2017].

[42] Motion Canada. (2017). *Dodge (Baldor) P2BE103R* [Online]. Available: https://www.motioncanada.ca/productDetail.jsp?sku=00570218. [Accessed 1 December 2017]

[43] Motion Canada. (2017). *Dodge (Baldor) P4BE400R* [Online]. Available: https://www.motioncanada.ca/productDetail.jsp?sku=01378526. [Accessed 4 December 2017].

[44] MetalsDepot. (2017). *A36 Steel Square Bar* [Online]. Available: https://www.metalsdepot.com/steel-products/steel-square-bar. [Accessed 5 December 2017].

[45] TW METALS. (2017). *4340 N&T VAC Melt AMS 6414 4.500 Dia Alloy Bar/Rod-08171-3* [Online]. Available: https://www.twmetals.com/catalog.html?cid=bar-alloy-steel&id=08171-3. [Accessed 4 December 2017].

[46] MetalsDepot. (2017). *Steel Beams* [Online]. Available: https://www.metalsdepot.com/steel-products/steel-beams. [Accessed 5 December 2017].

[47] MetalsDepot. (2017). *Steel Plate* [Online]. Available: https://www.metalsdepot.com/steel-products/steel-plate. [Accessed 5 December 2017].

[48] MetalsDepot. (2017). *Round Bar* [Online]. Available: https://www.metalsdepot.com/steel-products/round-bar. [Accessed 5 December 2017].

[49] MetalsDepot. (2017). *Steel Angle* [Online]. Available: https://www.metalsdepot.com/steel-products/steel-angle. [Accessed 5 December 2017].

[50] Motion Canada. (2017). *Dodge (Baldor) P2B-S2-215RE* [Online]. Available: https://www.motioncanada.ca/productDetail.jsp?sku=07547551. [Accessed 4 December 2017].

[51] Motion Canada. (2017). *Dodge (Baldor) FCE315R* [Online]. Available: https://www.motioncanada.ca/productDetail.jsp?sku=00572120. [Accessed 4 December 2017].

Appendix F – Bill of Materials

The complete bill of materials required for the articulating jig design is listed in Table F1 below. The sheet reference refers to the preliminary engineering drawings in Appendix G.

TABLE F1 BILL OF MATERIAL FOR ARTICULATING JIG

PART NUMBER	QTY	DESCRIPTION	MATERIAL	SHEET REFERENCE	VENDOR
JIG					
1-1-01	**4**	**1.50" X 2.00" X 192.60" FLAT BAR**	**CSA G40.21-44W**	**1-1-01**	
1-1-02	**24**	**43.87" X 12.95" X 0.25" JIG RIB**	**CSA G40.21-44W**	**1-1-01**	
1-1-03	**2**	**110.00" X 17.00" X 0.81" SIDE PLATE**	**CSA G40.21-44W**	**1-1-01**	
1-1-04	**2**	**4.00"DIA. X 3.25" JIG SHAFT**	**4340 STEEL**	**1-1-02**	
1-1-05	**4**	**9.00"DIA. X 0.69" FLANGE**	**4340 STEEL**	**1-1-02**	
1-1-06	**8**	**5/8"-11 SQUARE HEAD BOLT**	**GRADE 5 STEEL**	**MCMASTER-CARR P/N 92327A327**	**MCMASTER-CARR**
1-1-07	**8**	**5/8"-11 NYLON-INSERT LOCKNUT**	**GRADE 5 STEEL**	**MCMASTER-CARR P/N 95615A250**	**MCMASTER-CARR**
1-1-08	**24**	**TRUSS LOCATOR ASSEMBLY**	**MANY**	**1-1-03**	
1-1-08-01	24	4" X 3" SURFACE MOUNT HINGE	STEEL	MCMASTER-CARR P/N 16175A28	MCMASTER-CARR
1-1-08-02	24	7/8" DIA. COUNTERSUNK MAGNETIC DISK	NICKEL-PLATED NEODYMIUM	MCMASTER-CARR P/N 5862K34	MCMASTER-CARR
1-1-08-03	24	5.30" X 0.38" X 3.49" TRUSS LOCATOR BODY	CSA G40.21-44W	1-1-04	
1-1-08-04	48	7.17" X 6.1" X 0.18" TRUSS LOCATER GUIDE	CSA G40.21-44W	1-1-04	
1-1-08-05	24	186N VERTICAL HANDLE TOGGLE CLAMP	1018 CARBON STEEL	MISUMI P/N MCO4-1L	MISUMI
1-1-08-06	24	0.38" X 0.93" X 3.49" PLATE	CSA G40.21-44W	1-1-04	
1-1-09	**4**	**FORK POCKET ASSEMBLY**	**CSA G40.21-44W**	**1-1-05**	

1-1-09-01	4	8.00" X 3.00" X 46.53" X .188" RECTANGULAR TUBING	CSA G40.21-44W	-	
1-1-09-02	4	6.00" X 1.25" X 12.00" FLAT BAR OUTER SUPPORT	CSA G40.21-44W	-	
1-1-09-04	4	2.21" X 1.25" X 6.00" FORK POCKET RAMP SUPPORT	CSA G40.21-44W	1-1-06	
1-1-10	**5**	**LIFTING LUG ASSEMBLY**	**CSA G40.21-44W**	**1-1-07**	
1-1-10-01	5	11.36" X 6" X 0.875" TH. LIFTING LUG	CSA G40.21-44W	1-1-08	
1-1-10-02	5	1.88" X 5" X .25" LIFTING LUG EDGE	CSA G40.21-44W	1-1-08	
1-1-10-03	**5**	**LIFTING LUG PIN ASSEMBLY**	**CSA G40.21-44W**	**1-1-09**	
1-1-10-03-01	5	LIFTING LUG PIN	CSA G40.21-44W	1-1-10	
1-1-10-03-02	5	.25" DIA LIFTING LUG PIN HANDLE	CSA G40.21-44W	1-1-10	
1-1-10-04	5	1/2-13" SQUARE HEAD BOLT	GRADE 5 STEEL	MCMASTER-CARR P/N 91465A161	MCMASTER-CARR
1-1-11	5	OPPOSITE HAND LIFTING LUG ASSEMBLY		1-1-07	
FORK AND JIG ROTATION					
1-2-01-01	1	10” X 6” X 188” TUBING	CSA G40.21-44W	-	-
1-2-01-02	1	6” X 4” X .5” TUBING	CSA G40.21-44W	-	-
1-2-01-03	1	6” X 8” X .5” TUBING	CSA G40.21-44W	-	-
1-2-01-04	1	10” X 6” X 188” TUBING	CSA G40.21-44W	-	-
1-2-01-05	1	12” X 8” X .5” SHEET METAL	1020 STEEL	-	-
1-2-01-06	1	4” X 4” X 3” CUBE	1020 STEEL	-	-
1-2-01-07	1	1.25" THREAD SIZE FORGED STEE HOIST RING FOR LIFTING	BLACK OXIDE STEEL	MCMASTER CARR P/N 2994T81	MCMASTER CARR
1-2-01-08	4	1.38” X 1.88” X 3.25” CUBE	1020 STEEL	-	-

1-2-01-09	4	4.5” X 3.34” X .5” CUBE	1020 STEEL	-	-
1-2-02	2	PILLOW BLOCK ROLLER BEARING UNIT - TWO-BOLT BASE, 1.1875" ID	-	BLADOR P/N 023000	-
1-2-03	2	PILLOW BLOCK ROLLER BEARING UNIT - FOUR-BOLT BASE, 4" ID	-	BALDOR P/N 023691	-
1-2-04-01	1	THREE-STAGE STEPPED SHAFT	4340 STEEL HB275	-	-
1-2-04-02	1	10" DIA. X 0.25 SHEET METAL	1020 STEEL	-	-
1-2-04-03	1	5.43" X 1" X 0.2 SHEET METAL	1020 STEEL	-	-
1-2-04-04	1	THREE-STAG STEPPED SHAFT	4340 STEEL HB275	-	-
1-2-04-05	1	30" DIA. ALUMINUM HAND WHEEL	319 ALUMINUM	-	-
1-2-04-06	1	STRAP HINGE BASE	ZINC-PLATED STEEL	MCMASTER CARR P/N 1796A25	MCMASTER CARR
1-2-04-07	1	STRAP HINGE LEAF	ZINC-PLATED STEEL	MCMASTER CARR P/N 1796A25	MCMASTER CARR
1-2-04-08	4	0.5"-13 THREADED SIZE, 5" LG. HE HEAD SCREW-GRADE 8	ZINC-ALUMINUM COATED STEEL	MCMASTER CARR P/N 91286A351	MCMASTER CARR
1-2-04-09	4	WASHER FOR 0.5" SCREW SIZE	316 STAINLESS STEEL	MCMASTER CARR P/N 90107A033	MCMASTER CARR
1-2-04-10	4	0.5"-13 THREADED SIZE HEX NUT GRADE 8	ZINC-ALUMINUM COATED STEEL	MCMASTER CARR P/N 93827A245	MCMASTER CARR
1-2-04-11	8	0.75"-16 THREADED SIZE, 4" LG HE HEAD BOLT-GRADE 8	ZINC-ALUMINUM COATED STEEL	MCMASTER CARR P/N 91286A514	MCMASTER CARR
1-2-04-12	8	WASHER FOR 0.75" SCREW SIZE	316 STAINLESS STEEL	MCMASTER CARR P/N 90107A121	MCMASTER CARR
1-2-04-13	8	0.75"-16 THREADED SIZE HEX NU GRADE 8	ZINC-ALUMINUM COATED STEEL	MCMASTER CARR P/N 93827A267	MCMASTER CARR
1-2-04-14	4	0.313"-1	ZINC-PLATED	MCMASTER CARR P/N	MCMASTER

		THREADED SIZE, 1.25" LG. HEX HEAD SCREW-GRADE 5	STEEL	92865A585	CARR
1-2-04-15	4	0.313"-1 THREADED SIZE HEX NU GRADE 5	ZINC-PLATED STEEL	MCMASTER CARR P/N 95462A030	MCMASTER CARR
1-2-04-16	1	NONMARRING ENCASED MAGNET WITH TTHREADED STUD	-	MCMASTER CARR P/N 7132T24	MCMASTER CARR
GUIDE COLUMN					
1-3-01	1	W18x21 I BEAM	CSA G40.21-44W	1-3-01	
1-3-02	1	TROLLEY FRAME RHS	CSA G40.21-44W	1-3-01	
1-3-03	1	TROLLEY FRAME LHS	CSA G40.21-44W	1-3-01	
1-3-04	4	THREADED FLANGED TRACK ROLLER	STEEL	MCMASTER P/N 6318K55	MCMASTER CARR
1-3-05	4	1"-14 HEX NUT	GRADE 8 STEEL	MCMASTER P/N 97135A059	MCMASTER CARR
1-3-06	1	0.5"-13 SQUARE HEAD BOLD	GRADE A STEEL	MCMASTER P/N 91465A161	MCMASTER CARR
1-3-07	4	0.5" SPACER	STEEL	MCMASTER P/N 92415A147	MCMASTER CARR
1-3-08	1	0.5"-13 HEX NUT	GRADE 9 STEEL	MCMASTER P/N 95036A024	MCMASTER CARR
1-3-09	1	PUSH HANDLE	ROD CSA G40.21-44W	1-3-02	
1-3-10	1	VERTICAL COLUMN CONNECTION PLATE	CSA G40.21-44W	1-3-02	
1-3-11	2	NONSPARKING WEDGE	ALUMINUM-BRONZE	MCMASTER P/N 6517A12	MCMASTER CARR
1-3-12	4	TROLLEY STOPPERS - 1" PLATE	CSA G40.21-44W	1-3-02	
1-3-13	4	ADJUSTABLE ECCENTRIC TRACK ROLLER	VARIES	MCMASTER P/N 3647K17	MCMASTER CARR
1-3-14	4	0.625"-18 HEX NUT	GRADE 9 STEEL	MCMASTER P/N 95036A045	MCMASTER CARR
1-3-15	1	TROLLEY FACEPLATE	CSA G40.21-44W	1-3-03	

		FRONT			
1-3-16	1	TROLLEY FACEPLATE BACK	CSA G40.21-44W	1-3-03	
HORIZONTAL TROLLEY					
1-4-01	1	TROLLEY FRAME LHS	CSA G40.21-44W	1-4-01	
1-4-02	1	ROLLEY FRAME RHS	CSA G40.21-44W	1-4-01	
1-4-03	6	FLANGED THREADED TRACK ROLLER	STEEL	MCMASTER P/N 6318K56	MCMASTER
1-4-04	6	1.25"-12 NYLON INSERT LOCKNUT	GRADE 8 STEEL	MCMASTER P/N 97135A113	MCMASTER
1-4-05	1	HOIST PIN SUPPORT	CSA G40.21-44W	1-4-2	
1-4-06	2	1"-6 NYLON INSERT LOCKNUT	GRADE 8 STEEL LOCKNUT	MCMASTER P/N 97135A038	MCMASTER
1-4-07	1	6600 LB CAPACITY ELECTRIC HOIST	VARIES	MCMASTER P/N 3316T974	MCMASTER
JIB CRANE					
1-5-01	**1**	**HORIZONTAL BEAM ASSEMBLY**	**MANY**	**1-5-01**	**MANY**
1-5-01-01	1	W18 X 50 X 196.50" LG	-	-	-
1-5-01-02	1	34.00" X 14.00" X 0.19" PLATE	-	-	-
1-5-01-03	2	30.69" X 15.00" X 0.68" PLATE	-	1-5-01-01	-
1-5-01-04	1	W14 X 22 BEAM X 34.00" LG	-	-	-
1-5-01-05	1	13.75" X 5.00" X .38" PLATE	-	1-5-01-01	-
1-5-01-07	1	12.00" X 6.00" X .25" PLATE	-	-	-
1-05-01-08	1	16T WELD-ON LOAD RING	YOKE	YOKE P/N 8-082-16	YOKE
1-05-01-06	1	16T WELD-ON LOAD RING	YOKE	YOKE P/N 8-082-16	YOKE
1-05-01-09	2	36 MM SWAGED WIRE ROPE SOCKET	YOKE	YOKE P/N 8-730-36	YOKE
1-5-01-10	1	36 MM WIRE ROPE X 132.00" LG	-	-	-
1-5-01-11	1	8.00" X 8.00" X 1.13" THK X 10.50"	-	-	-

		LG ANGLE			
1-5-01-12	1	20.00" X 12.00" X 0.50" PLATE	-	-	-
1-5-01-13	2	3.00" X 2.00" X 2.00" PLATE	-	-	-
1-5-02	**1**	**JIB CRANE ROTATION ASSEMBLY**	**MANY**	**1-5-02**	**MANY**
1-5-02-01	1	15.00" X 14.00" X 0.75" PLATE	CSA G40.21-44W	1-5-02-01	CSA G40.21-44W
1-5-02-02	1	69.13" X 14.00" X 0.38" PLATE	CSA G40.21-44W	1-5-02-01	CSA G40.21-44W
1-5-02-03	2	20.00" X 14.00" X 0.19" PLATE	CSA G40.21-44W	1-5-02-01	CSA G40.21-44W
1-5-02-04	1	4.25" DIA X 60.25" LG ROUND	1020 STEEL	1-5-02-02	1020 STEEL
1-5-02-07	1	P2B-S2-215RE ROLLER BEARING W/ PILLOW BLOCK HOUSING	-		-
1-5-02-08	1	FC-E-315R TAPERED ROLLER BEARING W/ FLANGED HOUSING	-		-
1-5-02-09	2	2.00" X 1.25" X 49.63" BAR	CSA G40.21-44W	1-5-02-01	CSA G40.21-44W
1-5-03	**1**	**MAST COLUMN ASSEMBLY**	**CSA G40.21-44W**	**1-5-03**	**CSA G40.21-44W**
1-5-03-01	1	24" SCH 80 PIPE X 208.50" LG	-		-
1-5-03-02	1	4.00" X 5.00" X 1.00" PLATE	-		-
1-5-03-03	1	12.00" X 5.00" X .50" PLATE	1-5-03-01		1-5-03-01
1-5-03-04	1	14.00" X 16.00" X1.00" PLATE	1-5-03-01		1-5-03-01
1-5-03-05	2	6.00" X 4.00" X 1.00" PLATE	1-5-03-01		1-5-03-01
1-5-03-06	4	4.25" X 2.00" X .25" PLATE	1-5-03-01		1-5-03-01
1-5-03-07	1	25.00" DIA. X .19" PLATE	-		-
1-5-03-09	1	75.00" DIA X .75" PLATE	-		-
1-5-03-08	4	25.00" X 25.00" X .75" PLATE	1-5-03-01		1-5-03-01

1-5-03-10	1	36.00" X 14.00" X 1.00" PLATE	1-5-03-02		1-5-03-02
1-5-03-11	1	12.75" X 8.00" X 1.00" PLATE	1-5-03-02		1-5-03-02
1-5-04	**4**	**0.75"-10 X 4.25" LG HEX HD BOLT**	**GRADE 8**	**MCMASTER P/N 91257A200**	**GRADE 8**
1-5-05	**4**	**0.75"-10 NYLOCK NUT**	**GRADE 8**	**MCMASTER P/N 97135A280**	**GRADE 8**
1-5-06	**6**	**0.5"-13 HEX HD BOLT**	**GRADE 8**	**MCMASTER P/N 91257A721**	**GRADE 8**
1-5-07	**14**	**0.5"-13 NYLOCK NUT**	**GRADE 8**	**MCMASTER P/N 97135A250**	**GRADE 8**
1-5-08	**8**	**0.5-13" X 1.5" LG HEX HD BOLT**	**GRADE 8**	**MCMASTER P/N 92620A716**	**GRADE 8**
1-5-09	**2**	**0.875"-9 X 3.5" LG HEX HD BOLT**	**GRADE 8**	**MCMASTER P/N 91257A915**	**GRADE 8**
1-5-10	**2**	**0.875"-9 NYLOCK NUT**	**GRADE 8**	**MCMASTER P/N 90630A114**	**GRADE 8**

Appendix G – Preliminary Engineering Drawings

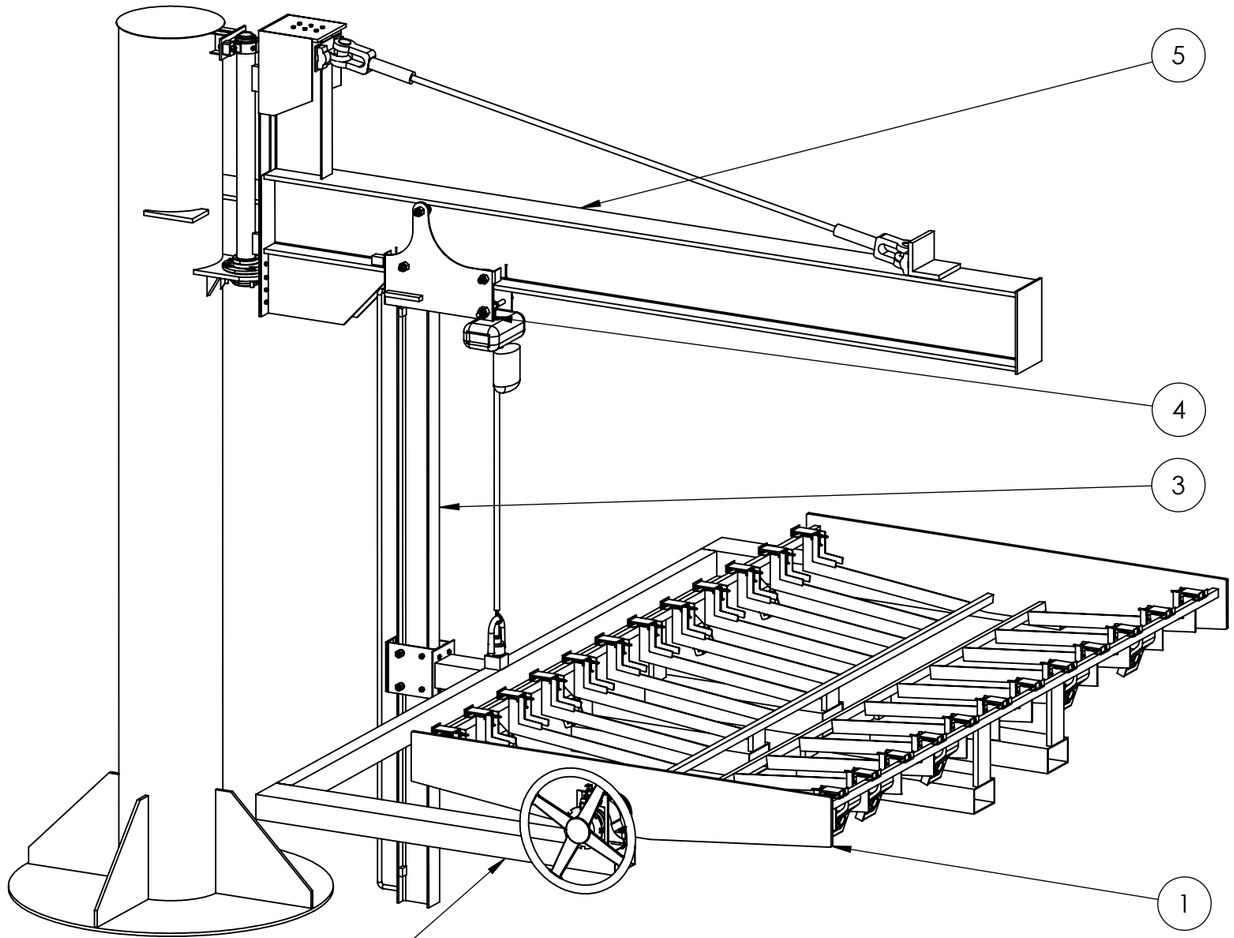

ITEM NO.	PART NUMBER	DESCRIPTION	QTY.	VENDOR	SHEET REFERENCE
1	1-1	JIG ASSEMBLY	1		1-1
2	1-2	FORK AND JIG ROTATION	1		1-2
3	1-3	VERTICAL GUIDE COLUMN	1		1-3
4	1-4	HORIZONTAL TROLLEY	1		1-4
5	1-5	JIB CRANE ASSEMBLY	1		1-5
6	1-6	0.625"-11 NYLON LOCKNUT	8	MCMASTER-95615A250	
7	1-7	0.625"-11 2.5" LG SQUARE BOLT	8	MCMASTER-92327A327	

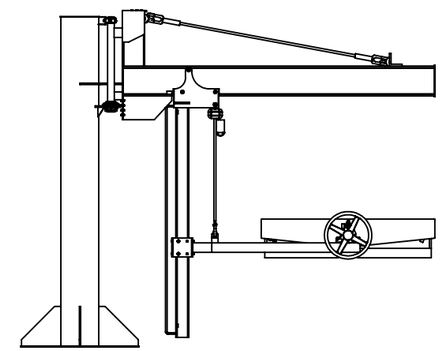

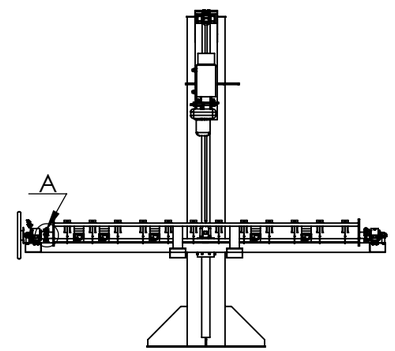

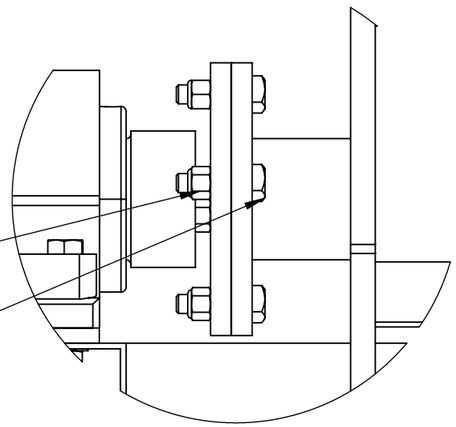

DETAIL A
SCALE 1 : 5

DETAIL NOTE: 4 FASTNERS ON EITHER SIDE OF ITEM ITEM 1-1

PREPARED FOR MODERN MANUFACTURING LTD.

DIMENSIONAL UNIT: INCHES

N/A = NOT APPLICABLE

UNLESS OTHERWISE SPECIFIED

0.X ± 0.1
0.XX ± 0.06
0.XXX ± 0.030

EDUCATIONAL AND PROPRIETARY

THE INFORMATION CONTAINED IN THIS DRAWING IS FOR EDUCATIONAL USE ONLY, AND **NOT FOR FABRICATION**. CONTENT IS PROPRIETARY AND MAY NOT BE USED WITHOUT THE WRITTEN CONSENT OF THE PROJECT TEAM.

MATERIAL: MANY

PARENT ASSEMBLY: N/A

DO NOT SCALE DRAWING

MECH 4860 - TEAM 19 DESIGN

TITLE: Articulating Jig Assembly

SIZE: **B** | DWG. NO.: 1-0 | REV: 0

SCALE: NTS | WEIGHT: N/A | SHEET 1 OF 1

SOLIDWORKS Educational Product. For Instructional Use Only.

ITEM NO.	PART NUMBER	DESCRIPTION	QTY.	SHEET REFERENCE
1	1-1-01	1.50" X 2.00" X 192.60" FLAT BAR	4	1-1-01
2	1-1-02	43.87" X 12.95" X 0.25" JIG RIB	24	1-1-01
3	1-1-03	110.00" X 17.00" X 0.81" SIDE PLATE	2	1-1-01
4	1-1-05	9.00"DIA. X 0.69" FLANGE	2	1-1-02
5	1-1-04	4.00"DIA. X 3.25" JIG SHAFT	2	1-1-02
6	1-1-08	TRUSS LOCATOR ASSEMBLY	24	1-1-03
7	1-1-09	FORK POCKET ASSEMBLY	4	1-1-05
8	1-1-10	LIFTING LUG ASSEMBLY	5	1-1-07
9	1-1-11	OPPOSITE HAND LIFTING LUG ASSEMBLY	5	1-1-07

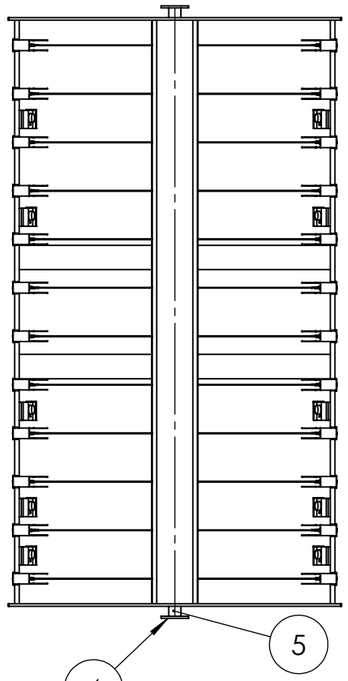

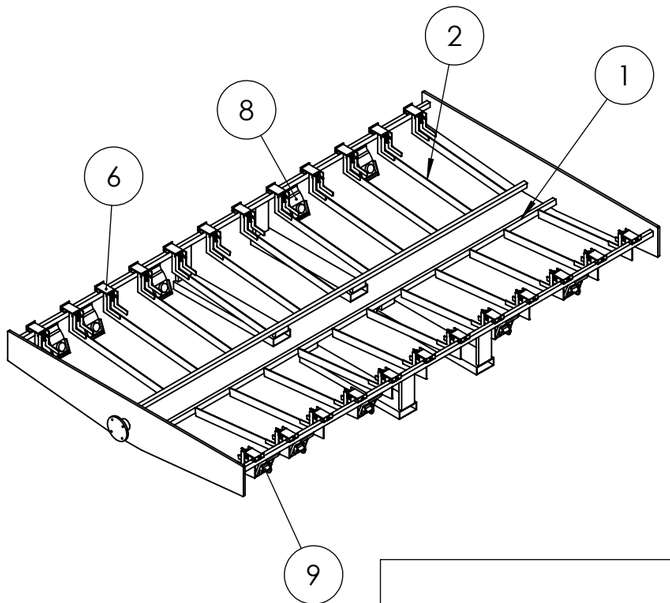

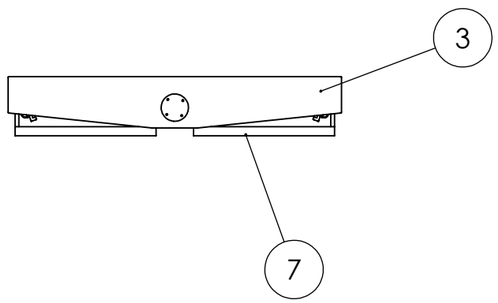

PREPARED FOR MODERN MANUFACTURING LTD.

DIMENSIONAL UNIT: INCHES

N/A = NOT APPLICABLE

UNLESS OTHERWISE SPECIFIED

0.X ± 0.1
0.XX ± 0.06
0.XXX ± 0.030

EDUCATIONAL AND PROPRIETARY
THE INFORMATION CONTAINED IN THIS DRAWING IS FOR EDUCATIONAL USE ONLY, AND **NOT FOR FABRICATION**. CONTENT IS PROPRIETARY AND MAY NOT BE USED WITHOUT THE WRITTEN CONSENT OF THE PROJECT TEAM.

MATERIAL
MANY

PARENT ASSEMBLY
1-0

DO NOT SCALE DRAWING

MECH 4860 - TEAM 19 DESIGN

TITLE:
ARTICULATING JIG
JIG ASSEMBLY

SIZE **B** | DWG. NO. 1-1 | REV 0

SCALE: 1:50 | WEIGHT: N/A | SHEET 1 OF 2

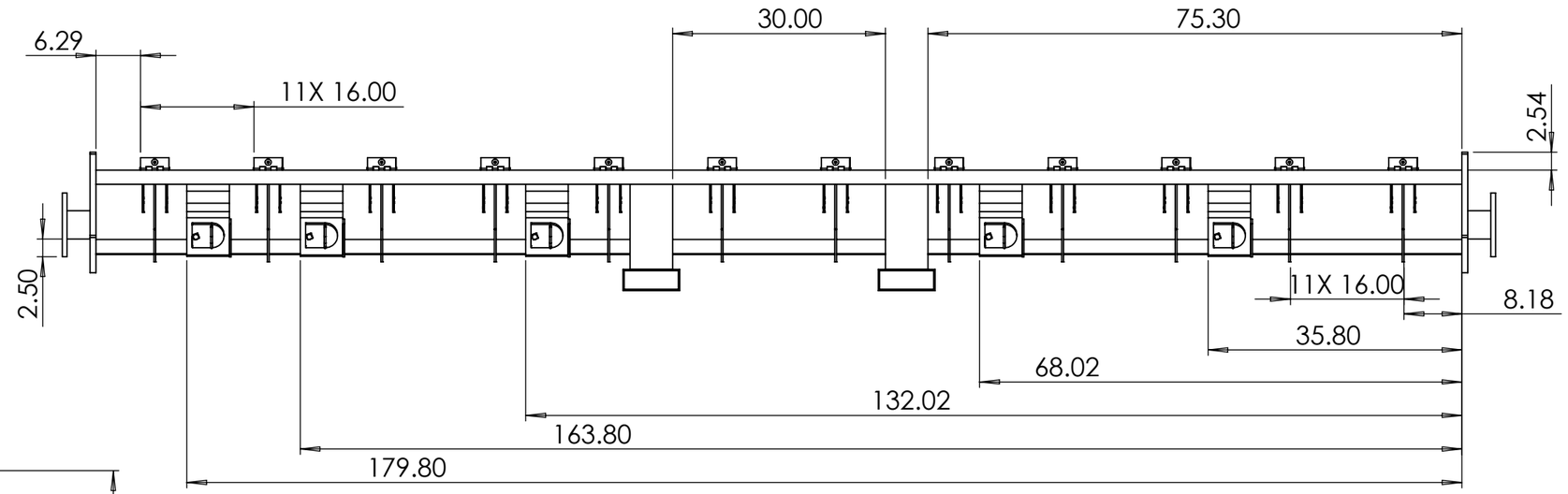

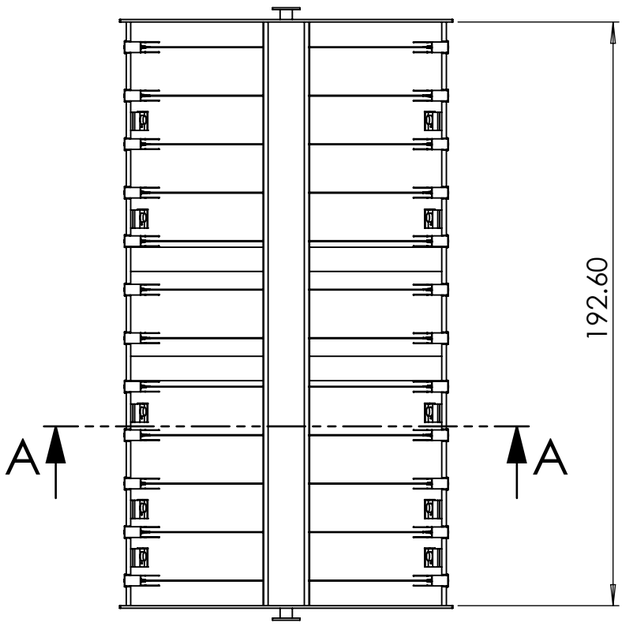

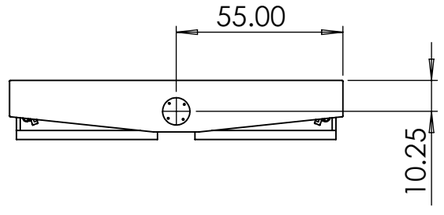

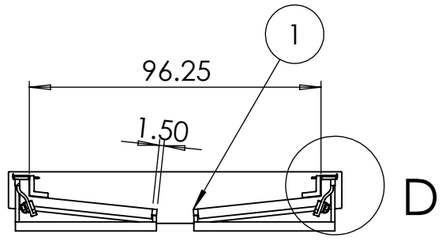

SECTION A-A

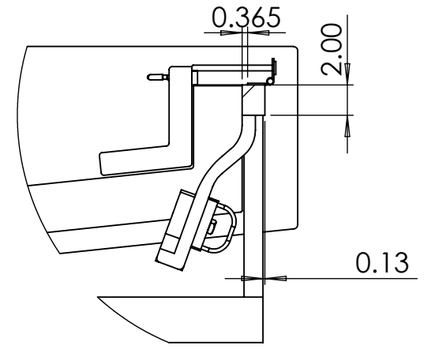

DETAIL D

SCALE 1 : 10

PREPARED FOR MODERN MANUFACTURING LTD.

DIMENSIONAL UNIT: INCHES N/A = NOT APPLICABLE **UNLESS OTHERWISE SPECIFIED** 0.X ± 0.1 0.XX ± 0.06 0.XXX ± 0.030	**EDUCATIONAL AND PROPRIETARY** THE INFORMATION CONTAINED IN THIS DRAWING IS FOR EDUCATIONAL USE ONLY, AND **NOT FOR FABRICATION**. CONTENT IS PROPRIETARY AND MAY NOT BE USED WITHOUT THE WRITTEN CONSENT OF THE PROJECT TEAM. MATERIAL: MANY PARENT ASSEMBLY: 1-0	MECH 4860 - TEAM 19 DESIGN TITLE: ARTICULATING JIG JIG ASSEMBLY SIZE: B DWG. NO.: 1-1 REV: 0	
	DO NOT SCALE DRAWING	SCALE: MANY	WEIGHT: N/A SHEET 2 OF 2

PART NUMBER	DESCRIPTION
1-1-01	1.50" X 2.00" X 192.60" FLAT BAR

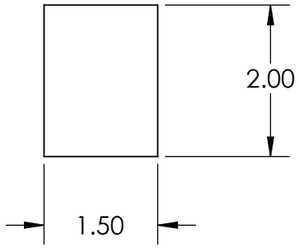

PART NUMBER	DESCRIPTION	NOTES
1-1-02	43.87" X 12.95" X 0.25" JIG RIB	DXF INCLUDED

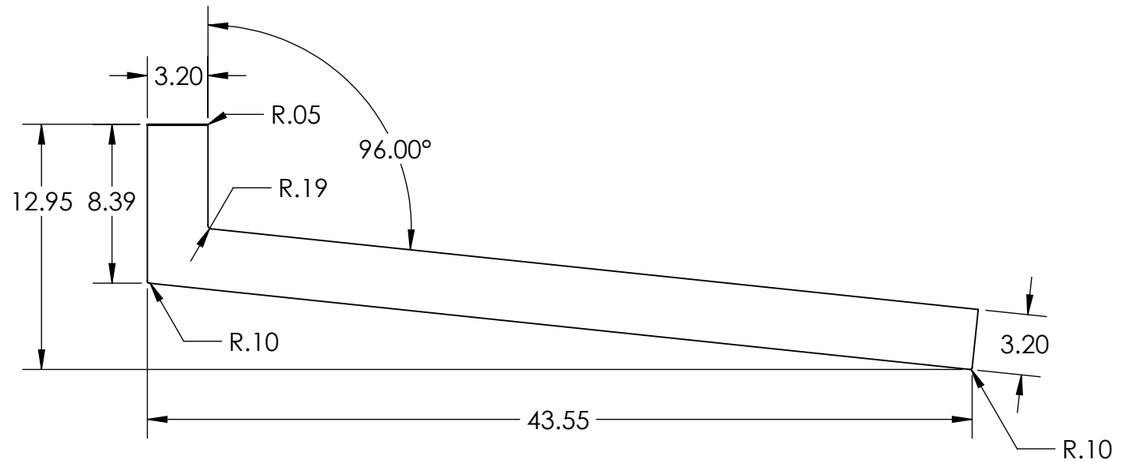

PART NUMBER	DESCRIPTION	NOTES
1-1-03	110.00" X 17.00" X 0.81" SIDE PLATE	DXF INCLUDED

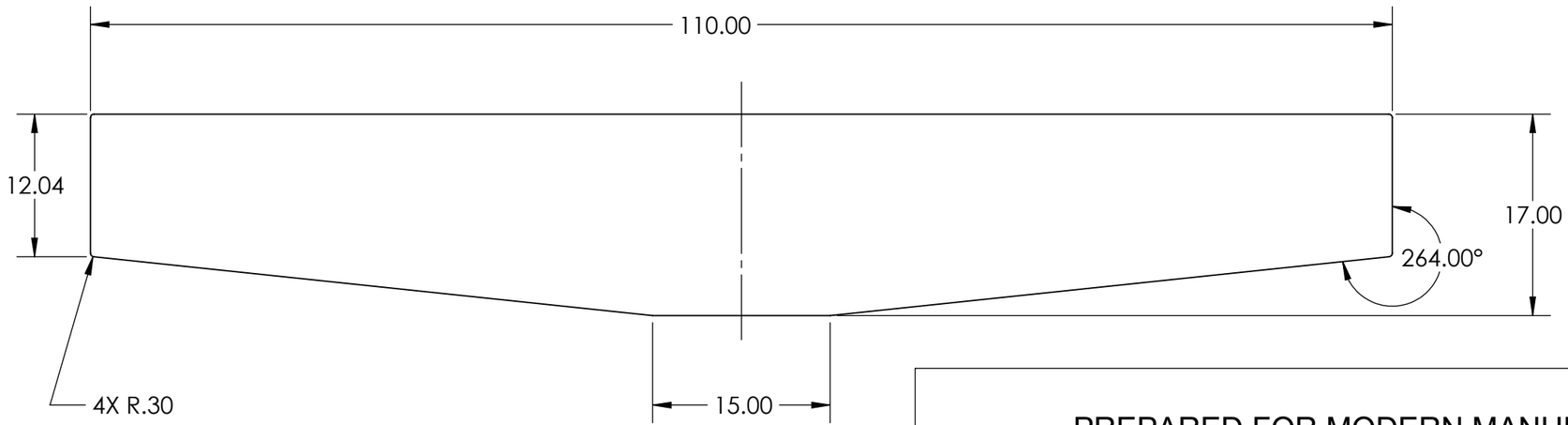

PREPARED FOR MODERN MANUFACTURING LTD.

DIMENSIONAL UNIT: INCHES

N/A = NOT APPLICABLE

UNLESS OTHERWISE SPECIFIED

0.X ± 0.1
0.XX ± 0.06
0.XXX ± 0.030

EDUCATIONAL AND PROPRIETARY

THE INFORMATION CONTAINED IN THIS DRAWING IS FOR EDUCATIONAL USE ONLY, AND **NOT FOR FABRICATION**. CONTENT IS PROPRIETARY AND MAY NOT BE USED WITHOUT THE WRITTEN CONSENT OF THE PROJECT TEAM.

MATERIAL: CSA G40.21-44W

PARENT ASSEMBLY: 1-1

DO NOT SCALE DRAWING

MECH 4860 - TEAM 19 DESIGN

TITLE:
JIG ASSEMBLY
COMPONENTS

SIZE: B | DWG. NO.: 1-1-01 | REV: 0

SCALE: MANY | WEIGHT: N/A | SHEET 1 OF 1

PART NUMBER	DESCRIPTION
1-1-04	4.00"DIA. X 3.25" JIG SHAFT

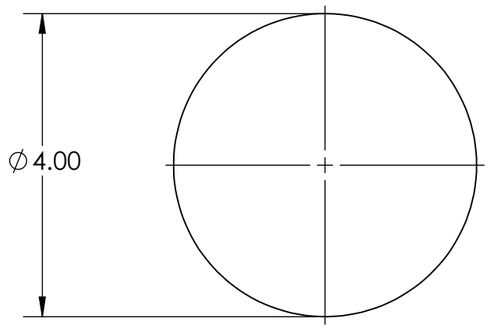

PART NUMBER	DESCRIPTION	NOTES
1-1-05	9.00"DIA. X 0.69" FLANGE	DXF INCLUDED

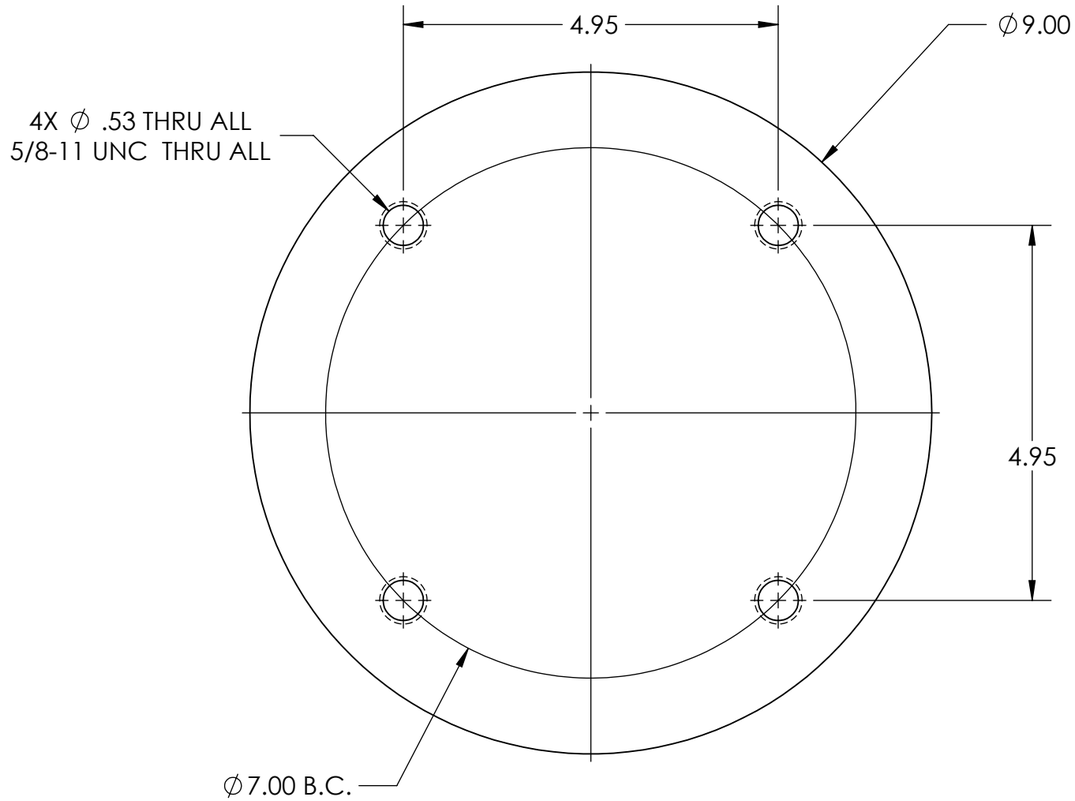

PREPARED FOR MODERN MANUFACTURING LTD.

DIMENSIONAL UNIT: INCHES

N/A = NOT APPLICABLE

UNLESS OTHERWISE SPECIFIED

0.X ± 0.1
0.XX ± 0.06
0.XXX ± 0.030

EDUCATIONAL AND PROPRIETARY
THE INFORMATION CONTAINED IN THIS DRAWING IS FOR EDUCATIONAL USE ONLY, AND **NOT FOR FABRICATION**. CONTENT IS PROPRIETARY AND MAY NOT BE USED WITHOUT THE WRITTEN CONSENT OF THE PROJECT TEAM.

MATERIAL
4340 STEEL

PARENT ASSEMBLY
1-1

DO NOT SCALE DRAWING

MECH 4860 - TEAM 19 DESIGN

TITLE:
JIG ASSEMBLY
COMPONENTS

SIZE	DWG. NO.	REV
B	1-1-02	0

SCALE: 1:2 | WEIGHT: N/A | SHEET 1 OF 1

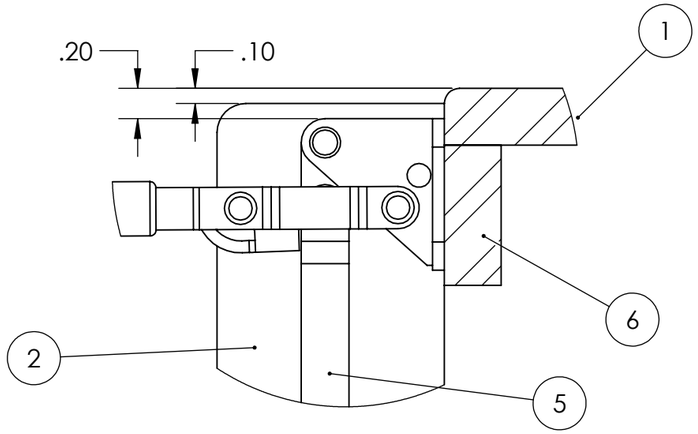

DETAIL A
SCALE 1 : 1

ITEM NO.	PART NUMBER	DESCRIPTION	QTY.	MATERIAL	SHEET REFERENCE	VENDOR
1	1-1-08-03	5.30" X 0.38" X 3.49" TRUSS LOCATOR BODY	1	CSA G40.21-44W	1-1-04	-
2	1-1-08-04	7.17" X 6.1" X 0.18" TRUSS LOCATER GUIDE	2	CSA G40.21-44W	1-1-04	-
3	1-1-08-01	4" X 3" SURFACE MOUNT HINGE	1	STEEL	MCMASTER-CARR P/N 16175A28	MCMASTER-CARR
4	1-1-08-02	7/8" DIA. COUNTERSUNK MAGNETIC DISK	1	NICKEL-PLATED NEODYMIUM	MCMASTER-CARR P/N 5862K34	MCMASTER-CARR
5	1-1-08-05	186N VERTICAL HANDLE TOGGLE CLAMP	1	108 CARBON STEEL	MISUMI P/N MCO4-1L	MISUMI
6	1-1-08-06	0.38" X 0.93" X 3.49" PLATE	1	CSA G40.21-44W	1-1-04	-

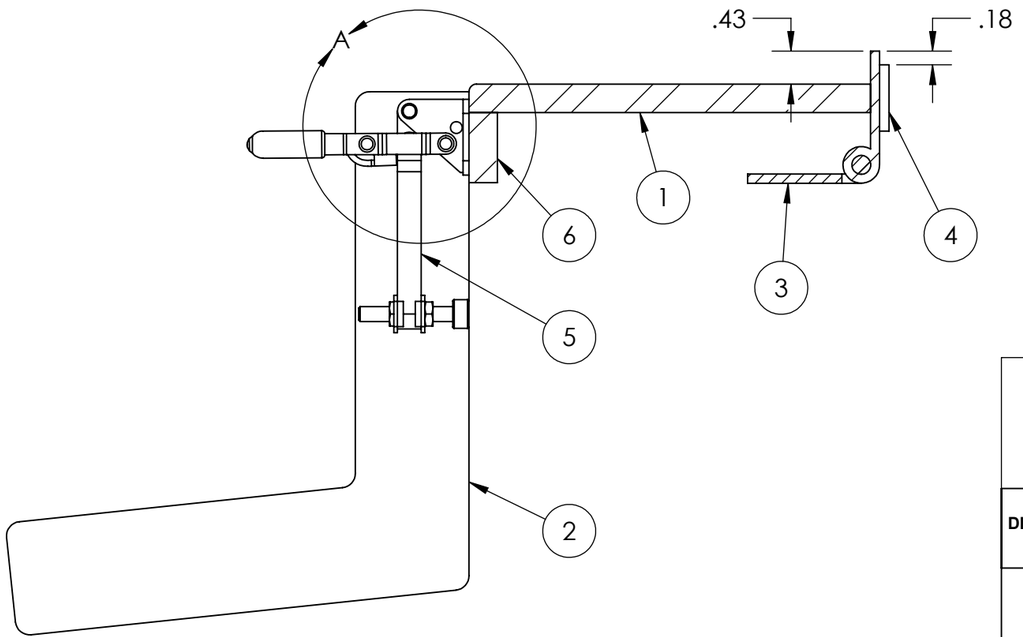

SECTION A-A
SCALE 1 : 2

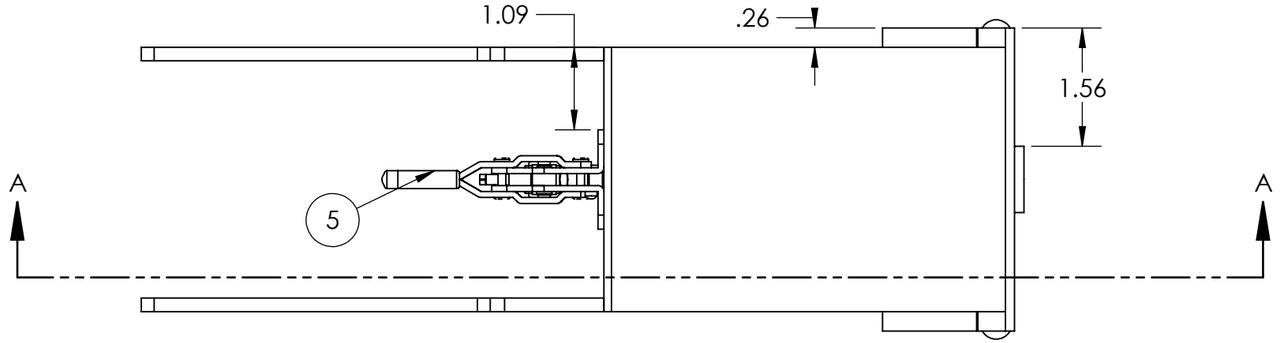

PREPARED FOR MODERN MANUFACTURING LTD.

DIMENSIONAL UNIT: INCHES

N/A = NOT APPLICABLE

UNLESS OTHERWISE SPECIFIED

0.X ± 0.1
0.XX ± 0.06
0.XXX ± 0.030

EDUCATIONAL AND PROPRIETARY
THE INFORMATION CONTAINED IN THIS DRAWING IS FOR EDUCATIONAL USE ONLY, AND **NOT FOR FABRICATION**. CONTENT IS PROPRIETARY AND MAY NOT BE USED WITHOUT THE WRITTEN CONSENT OF THE PROJECT TEAM.

MATERIAL
MANY

PARENT ASSEMBLY
1-1

DO NOT SCALE DRAWING

MECH 4860 - TEAM 19 DESIGN

TITLE:
JIG ASSEMBLY
TRUSS LOCATOR ASSEMBLY

SIZE	DWG. NO.	REV
B	1-1-03	0

SCALE: 1:2	WEIGHT: N/A	SHEET 1 OF 1

PART NUMBER	DESCRIPTION
1-1-08-03	5.30" X 0.38" X 3.49" TRUSS LOCATOR BODY

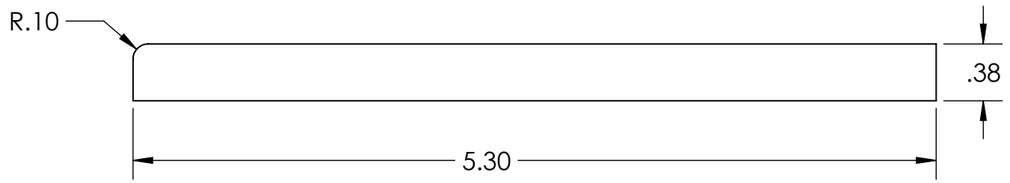

PART NUMBER	DESCRIPTION	NOTES
1-1-08-04	7.17" X 6.1" X 0.18" TRUSS LOCATER GUIDE	DXF INCLUDED

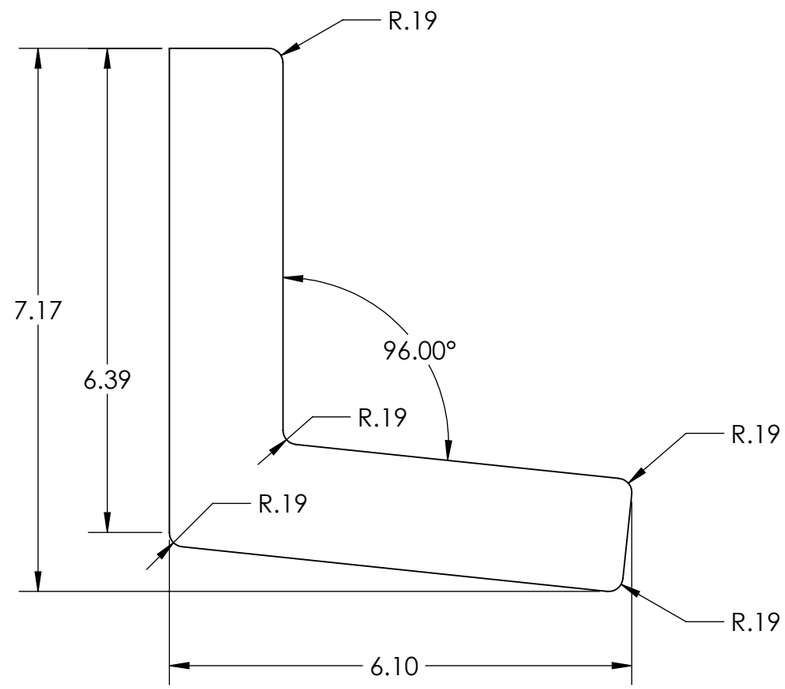

PART NUMBER	DESCRIPTION
1-1-08-06	0.38" X 0.93" X 3.49" PLATE

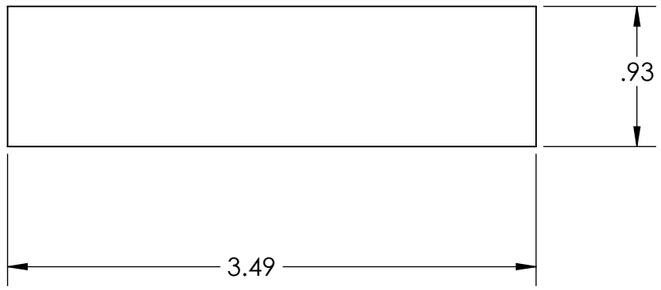

PREPARED FOR MODERN MANUFACTURING LTD.

DIMENSIONAL UNIT: INCHES

N/A = NOT APPLICABLE

UNLESS OTHERWISE SPECIFIED

0.X ± 0.1
0.XX ± 0.06
0.XXX ± 0.030

EDUCATIONAL AND PROPRIETARY
THE INFORMATION CONTAINED IN THIS DRAWING IS FOR EDUCATIONAL USE ONLY, AND **NOT FOR FABRICATION**. CONTENT IS PROPRIETARY AND MAY NOT BE USED WITHOUT THE WRITTEN CONSENT OF THE PROJECT TEAM.

MATERIAL
CSA G40.21-44W

PARENT ASSEMBLY
1-1-03

DO NOT SCALE DRAWING

MECH 4860 - TEAM 19 DESIGN

TITLE:
TRUSS LOCATOR ASSEMBLY COMPONENTS

SIZE **B** | DWG. NO. 1-1-04 | REV 0

SCALE: MANY | WEIGHT: N/A | SHEET 1 OF 1

ITEM NO.	PART NUMBER	DESCRIPTION	QTY.	VENDOR	SHEET REFERENCE
1	1-1-09-01	8.00" X 3.00" X 46.53" LG. X .188" WALL THK. RECTANGULAR TUBING	1	-	-
2	1-1-09-02	6.00" X 1.25" X 12.00" PLATE	1	-	-
3	1-1-09-04	2.21" X 1.25" X 6.00" FORK POCKET RAMP SUPPORT	1	-	1-1-06

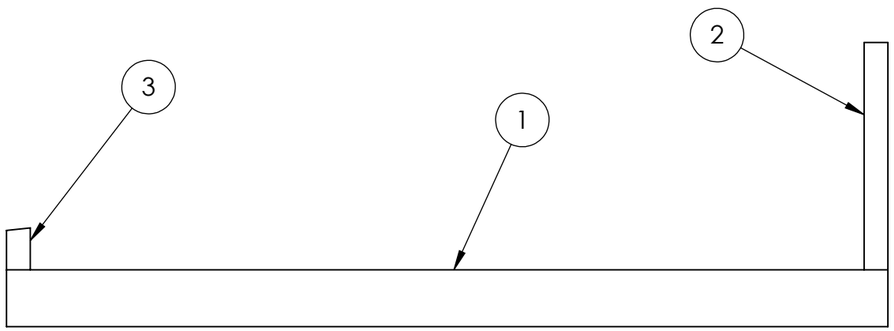

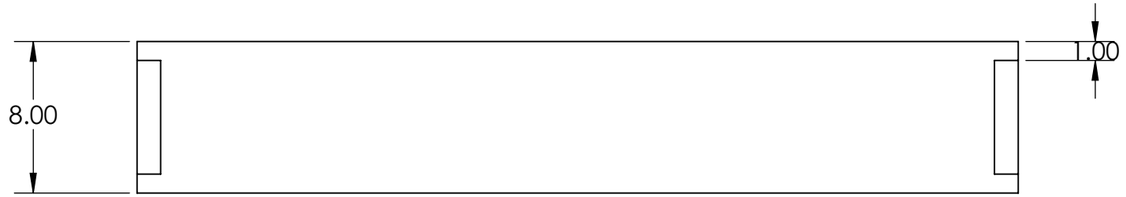

PREPARED FOR MODERN MANUFACTURING LTD.

DIMENSIONAL UNIT: INCHES

N/A = NOT APPLICABLE

UNLESS OTHERWISE SPECIFIED

0.X ± 0.1
0.XX ± 0.06
0.XXX ± 0.030

EDUCATIONAL AND PROPRIETARY
THE INFORMATION CONTAINED IN THIS DRAWING IS FOR EDUCATIONAL USE ONLY, AND **NOT FOR FABRICATION**. CONTENT IS PROPRIETARY AND MAY NOT BE USED WITHOUT THE WRITTEN CONSENT OF THE PROJECT TEAM.

MATERIAL
CSA G40.21-44W

PARENT ASSEMBLY
1-1

DO NOT SCALE DRAWING

MECH 4860 - TEAM 19 DESIGN

TITLE:
JIG ASSEMBLY
FORK POCKET ASSEMBLY

SIZE **B** | DWG. NO. 1-1-05 | REV 0

SCALE: 1:8 | WEIGHT: N/A | SHEET 1 OF 1

PART NUMBER	DESCRIPTION
1-1-09-04	2.21" X 1.25" X 6.00" FORK POCKET RAMP SUPPORT

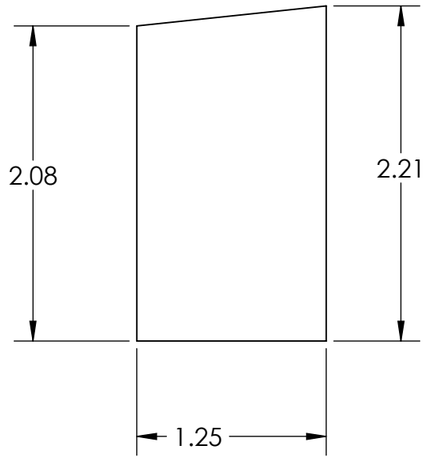

PREPARED FOR MODERN MANUFACTURING LTD.

DIMENSIONAL UNIT: INCHES

N/A = NOT APPLICABLE

UNLESS OTHERWISE SPECIFIED

0.X ± 0.1
0.XX ± 0.06
0.XXX ± 0.030

EDUCATIONAL AND PROPRIETARY
THE INFORMATION CONTAINED IN THIS DRAWING IS FOR EDUCATIONAL USE ONLY, AND **NOT FOR FABRICATION**. CONTENT IS PROPRIETARY AND MAY NOT BE USED WITHOUT THE WRITTEN CONSENT OF THE PROJECT TEAM.

MATERIAL
CSA G40.21-44W

PARENT ASSEMBLY
1-1-05

DO NOT SCALE DRAWING

MECH 4860 - TEAM 19 DESIGN

TITLE:
FORK POCKET ASSEMBLY
COMPONENTS

SIZE	DWG. NO.	REV
B	1-1-06	0

SCALE: MANY | WEIGHT: N/A | SHEET 1 OF 1

ITEM NO.	PART NUMBER	DESCRIPTION	QTY.	MATERIAL	VENDOR	SHEET REFERENCE
1	1-1-10-01	11.36" X 6" X 0.875" TH. LIFTING LUG	1	CSA G40.21-44W	-	1-1-08
2	1-1-10-02	1.88" X 5.00" X 0.25" LIFTING LUG EDGE	1	CSA G40.21-44W	-	1-1-08
3	1-1-10-04	1/2-13" SQUARE HEAD BOLT	1	GRADE A STEEL	MCMASTER-CARR	MCMASTER-CARR P/N 91465A161
4	1-1-10-03	LIFTING LUG PIN ASSEMBLY	1	CSAG40.21-44W		1-1-09

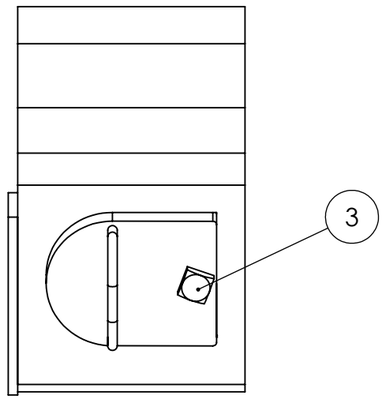

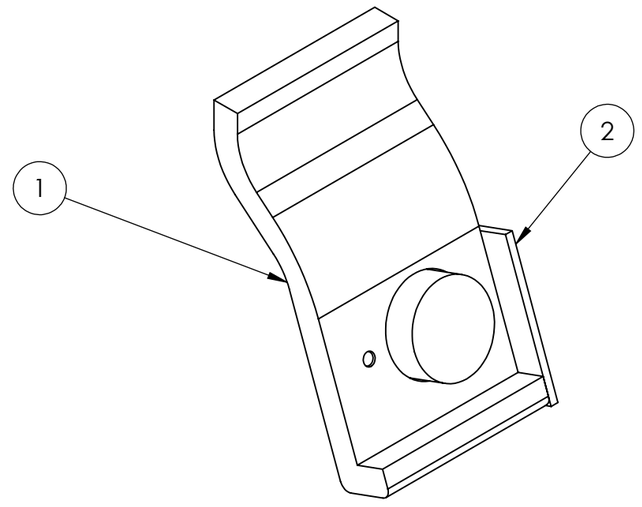

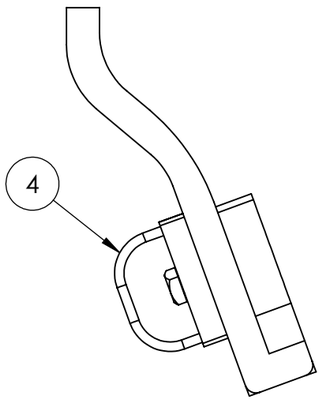

NOTE: P/N 1-1-11 IS OPPOSITE HAND VERSION OF P/N 1-1-10

PREPARED FOR MODERN MANUFACTURING LTD.

DIMENSIONAL UNIT: INCHES

N/A = NOT APPLICABLE

UNLESS OTHERWISE SPECIFIED

0.X ± 0.1
0.XX ± 0.06
0.XXX ± 0.030

EDUCATIONAL AND PROPRIETARY
THE INFORMATION CONTAINED IN THIS DRAWING IS FOR EDUCATIONAL USE ONLY, AND **NOT FOR FABRICATION**. CONTENT IS PROPRIETARY AND MAY NOT BE USED WITHOUT THE WRITTEN CONSENT OF THE PROJECT TEAM.

MATERIAL: MANY

PARENT ASSEMBLY: 1-1

DO NOT SCALE DRAWING

MECH 4860 - TEAM 19 DESIGN

TITLE:
JIG ASSEMBLY
LIFTING LUG ASSEMBLY

SIZE	DWG. NO.	REV
B	1-1-07	0

SCALE: 1:4 | WEIGHT: N/A | SHEET 1 OF 1

PART NUMBER	DESCRIPTION
1-1-10-01	11.36" X 6" X 0.875" TH. LIFTING LUG

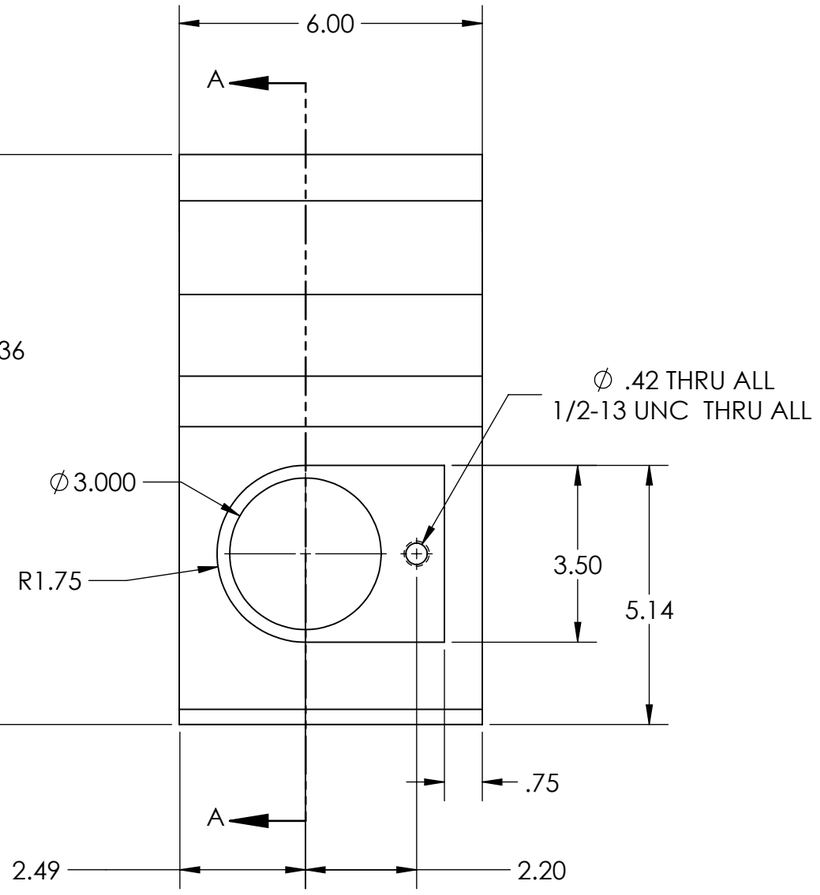

SECTION A-A
SCALE 1 : 3

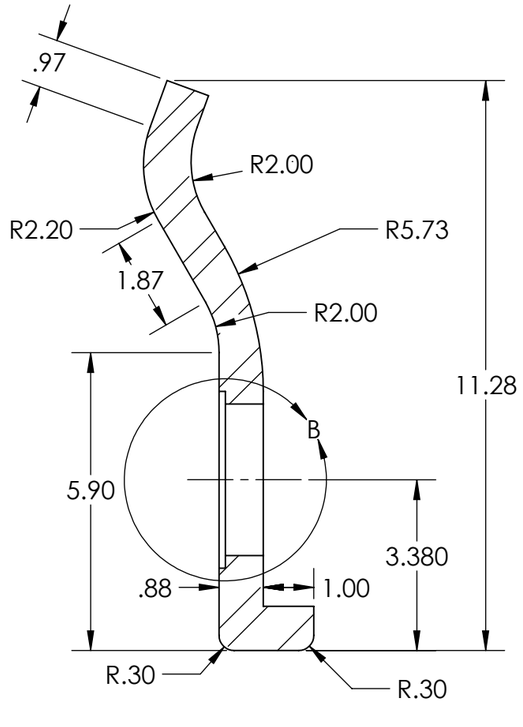

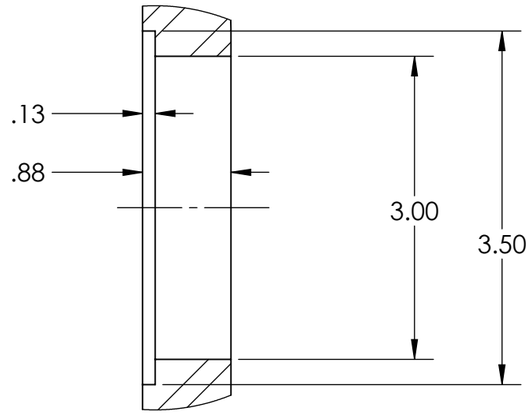

DETAIL B
SCALE 2 : 3

PART NUMBER	DESCRIPTION
1-1-10-02	1.88" X 5.00" X 0.25" LIFTING LUG EDGE

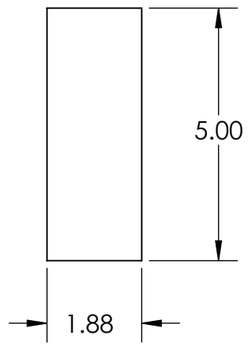

PREPARED FOR MODERN MANUFACTURING LTD.

DIMENSIONAL UNIT: INCHES

N/A = NOT APPLICABLE

UNLESS OTHERWISE SPECIFIED

0.X ± 0.1
0.XX ± 0.06
0.XXX ± 0.030

EDUCATIONAL AND PROPRIETARY
THE INFORMATION CONTAINED IN THIS DRAWING IS FOR EDUCATIONAL USE ONLY, AND **NOT FOR FABRICATION**. CONTENT IS PROPRIETARY AND MAY NOT BE USED WITHOUT THE WRITTEN CONSENT OF THE PROJECT TEAM.

MATERIAL
CSA G40.21-44W

PARENT ASSEMBLY
1-1-07

DO NOT SCALE DRAWING

MECH 4860 - TEAM 19 DESIGN

TITLE:
LIFTING LUG ASSEMBLY
COMPONENTS

SIZE	DWG. NO.	REV
B	1-1-08	0

SCALE: 1:3 | WEIGHT: N/A | SHEET 1 OF 1

ITEM NO.	PART NUMBER	DESCRIPTION	QTY.	VENDOR	SHEET REFERENCE
1	1-1-10-03-01	LIFTING LUG PIN	1	-	1-1-10
2	1-1-10-03-02	0.25" DIA LIFTING LUG PIN HANDLE	1	-	1-1-10

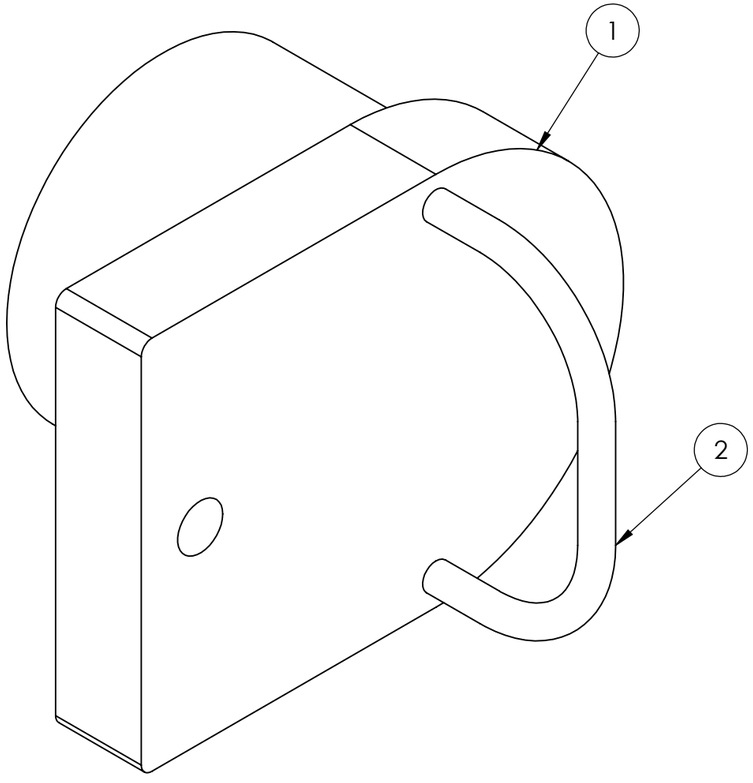

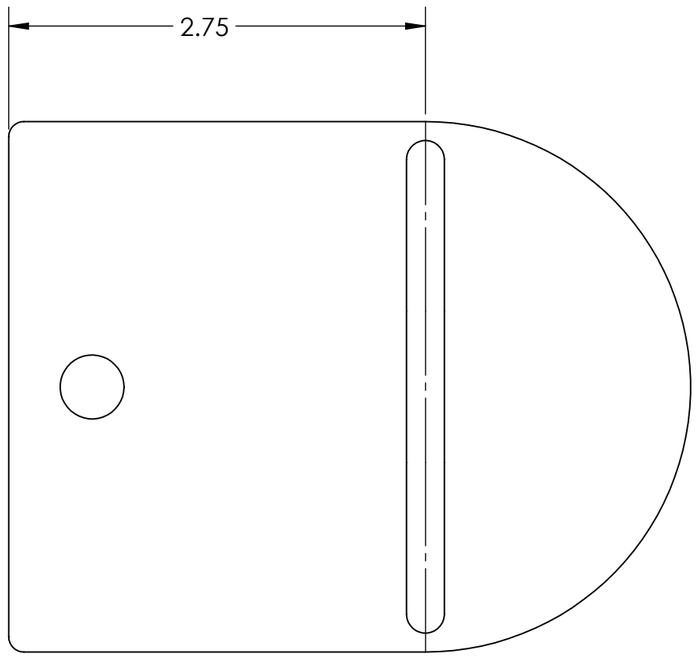

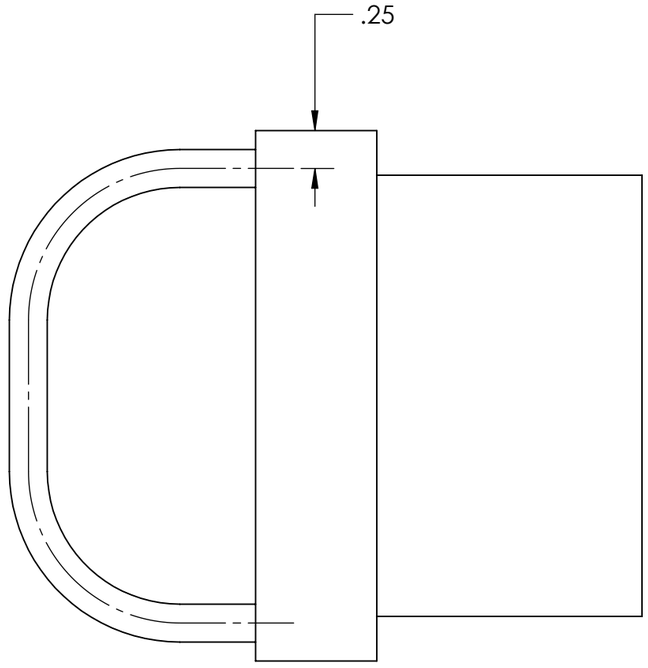

PREPARED FOR MODERN MANUFACTURING LTD.

DIMENSIONAL UNIT: INCHES

N/A = NOT APPLICABLE

UNLESS OTHERWISE SPECIFIED

0.X ± 0.1
0.XX ± 0.06
0.XXX ± 0.030

EDUCATIONAL AND PROPRIETARY
THE INFORMATION CONTAINED IN THIS DRAWING IS FOR EDUCATIONAL USE ONLY, AND **NOT FOR FABRICATION**. CONTENT IS PROPRIETARY AND MAY NOT BE USED WITHOUT THE WRITTEN CONSENT OF THE PROJECT TEAM.

MATERIAL
CSA G40.21-44W

PARENT ASSEMBLY
1-1-08

DO NOT SCALE DRAWING

MECH 4860 - TEAM 19 DESIGN

TITLE:
LIFTING LUG ASSEMBLY
LIFTING LUG PIN ASSEMBLY

SIZE **B** | DWG. NO. 1-1-09 | REV 0

SCALE: 1:1 | WEIGHT: N/A | SHEET 1 OF 1

PART NUMBER	DESCRIPTION
1-1-10-03-01	LIFTING LUG PIN

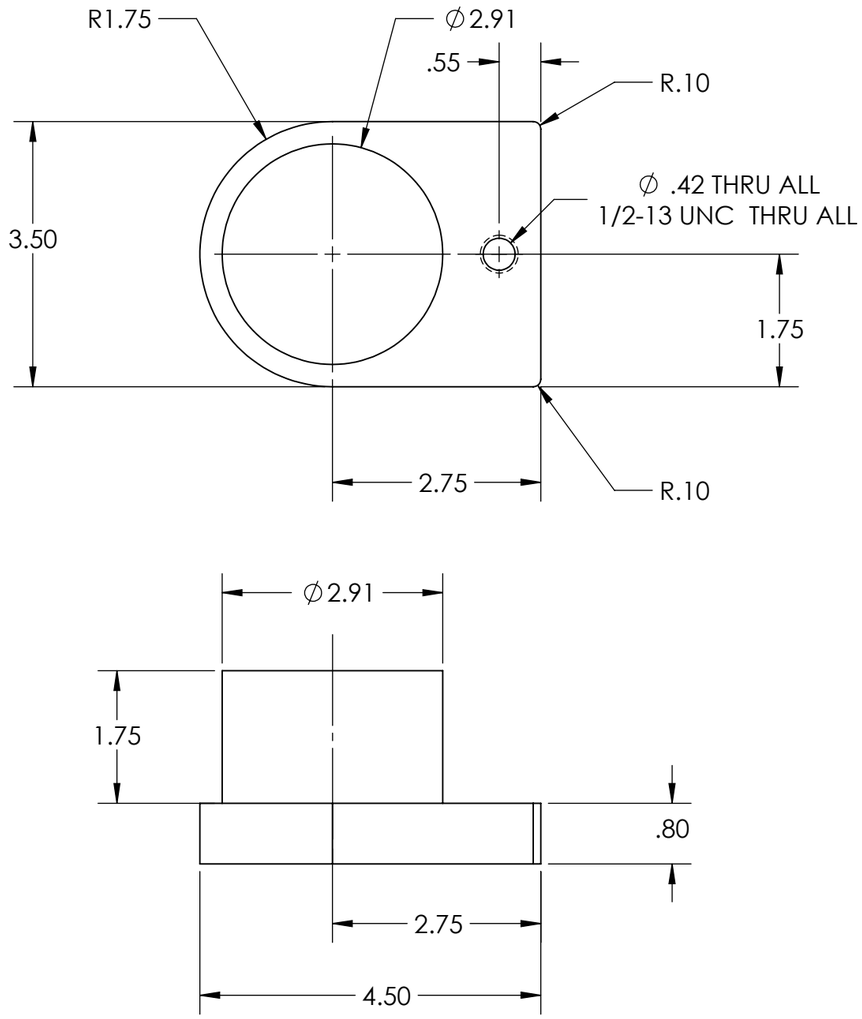

PART NUMBER	DESCRIPTION
1-1-10-03-02	0.25" DIA LIFTING LUG PIN HANDLE

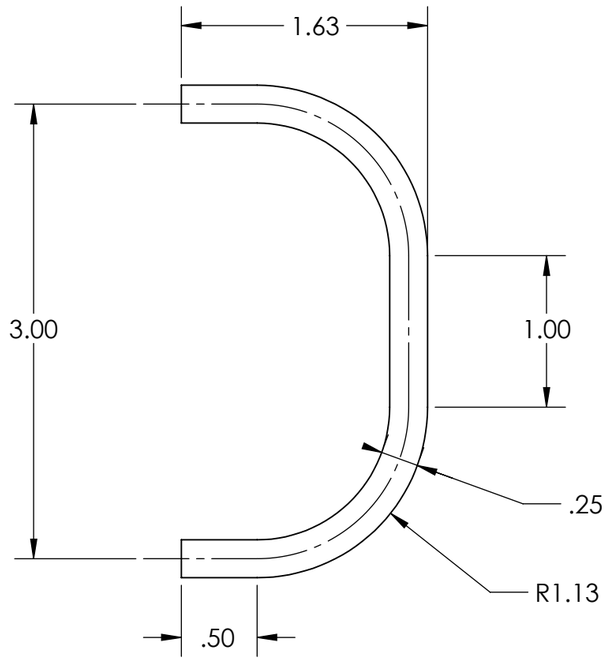

PREPARED FOR MODERN MANUFACTURING LTD.

DIMENSIONAL UNIT: INCHES

N/A = NOT APPLICABLE

UNLESS OTHERWISE SPECIFIED

0.X ± 0.1
0.XX ± 0.06
0.XXX ± 0.030

EDUCATIONAL AND PROPRIETARY
THE INFORMATION CONTAINED IN THIS DRAWING IS FOR EDUCATIONAL USE ONLY, AND **NOT FOR FABRICATION**. CONTENT IS PROPRIETARY AND MAY NOT BE USED WITHOUT THE WRITTEN CONSENT OF THE PROJECT TEAM.

MATERIAL
CSA G40.21-44W

PARENT ASSEMBLY
1-1-09

DO NOT SCALE DRAWING

MECH 4860 - TEAM 19 DESIGN

TITLE:
LIFTING LUG PIN ASSEMBLY
COMPONENTS

SIZE	DWG. NO.	REV
B	1-1-10	0

SCALE: MANY | WEIGHT: N/A | SHEET 1 OF 1

ITEM NO.	PART NUMBER	DESCRIPTION	QTY.	MATERIAL	VENDOR	SHEET REFERENCE
1	1-2-01	FORK	1			
2	1-2-02	PILLOW BLOCK ROLLER BEARING UNIT - TWO-BOLT BASE, 1.1875" ID	2	-	BALDOR	BLADOR P/N 023000
3	1-2-03	PILLOW BLOCK ROLLER BEARING UNIT - FOUR-BOLT BASE, 4" ID	2	-	BALDOR	BALDOR P/N 023691
4	1-2-04-01	THREE-STAGE STEPPED SHAFT	1	4340 STEEL HB275	-	-
5	1-2-04-02	10" DIA. X 0.25" SHEET METAL	1	AISI 1020 LOW CARBON/LOW TENSILE STEEL	-	-
6	1-2-04-03	5.43" X 1" X 0.25 SHEET METAL	1	AISI 1020 LOW CARBON/LOW TENSILE STEEL	-	-
7	1-2-04-04	THREE-STAGE STEPPED SHAFT	1	4340 STEEL HB275	-	
8	1-2-04-05	30" DIA. ALUMINUM HAND WHEEL	1	319 ALUMINUM	-	-
9	1-2-04-06	STRAP HINGE BASE	1	ZINC-PLATED STEEL	MCMASTER CARR	MCMASTER CARR P/N 1796A25
10	1-2-04-07	STRAP HINGE LEAF	1	ZINC-PLATED STEEL	MCMASTER CARR	MCMASTER CARR P/N 1796A25
11	1-2-04-08	0.5"-13 THREADED SIZE, 5" LG. HEX HEAD SCREW-GRADE 8	4	ZINC-ALUMINUM COATED STEEL	MCMASTER CARR	MCMASTER CARR P/N 91286A351
12	1-2-04-09	WASHER FOR 0.5" SCREW SIZE	4	316 STAINLESS STEEL	MCMASTER CARR	MCMASTER CARR P/N 90107A033
13	1-2-04-10	0.5"-13 THREADED SIZE HEX NUT GRADE 8	4	ZINC-ALUMINUM COATED STEEL	MCMASTER CARR	MCMASTER CARR P/N 93827A245
14	1-2-04-11	0.75"-16 THREADED SIZE, 4" LG HEX HEAD BOLT-GRADE 8	8	ZINC-ALUMINUM COATED STEEL	MCMASTER CARR	MCMASTER CARR P/N 91286A514
15	1-2-04-12	WASHER FOR 0.75" SCREW SIZE	8	316 STAINLESS STEEL	MCMASTER CARR	MCMASTER CARR P/N 90107A121
16	1-2-04-13	0.75"-16 THREADED SIZE HEX NUT GRADE 8	8	ZINC-ALUMINUM COATED STEEL	MCMASTER CARR	MCMASTER CARR P/N 93827A267
17	1-2-04-14	0.313"-18 THREADED SIZE, 1.25" LG. HEX HEAD SCREW-GRADE 5	4	ZINC-PLATED STEEL	MCMASTER CARR	MCMASTER CARR P/N 92865A585
18	1-2-04-15	0.313"-18 THREADED SIZE HEX NUT GRADE 5	4	ZINC-PLATED STEEL	MCMASTER CARR	MCMASTER CARR P/N 95462A030
19	1-2-04-16	NONMARRING ENCASED MAGNET WITH TTHREADED STUD	1	-	MCMASTER CARR	MCMASTER CARR P/N 7132T24
20	1-1-05	9" DIA. JIG FLANGE	2	4340 STEEL	BRUNSWICK STEEL	

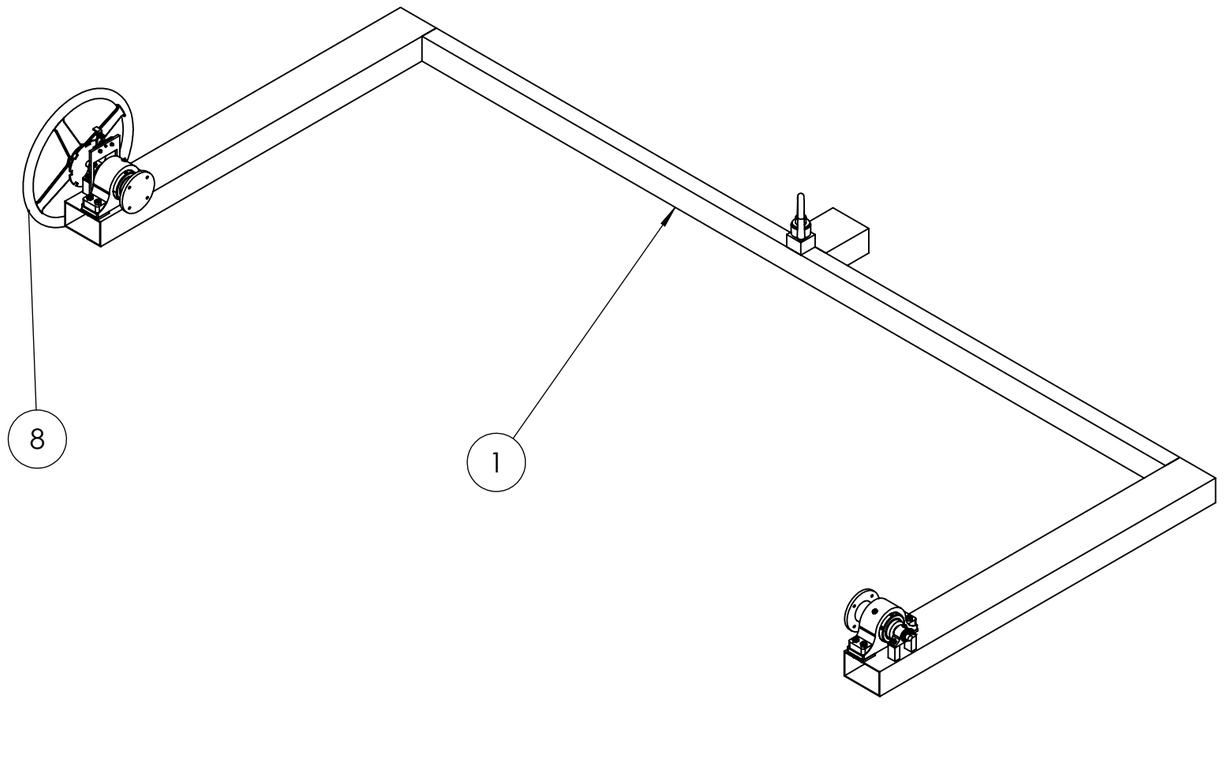

PREPARED FOR MODERN MANUFACTURING LTD.

DIMENSIONAL UNIT: INCHES

N/A = NOT APPLICABLE

UNLESS OTHERWISE SPECIFIED

0.X ± 0.5
0.XX ± 0.13
0.XXX ± 0.063

EDUCATIONAL AND PROPRIETARY
THE INFORMATION CONTAINED IN THIS DRAWING IS FOR EDUCATIONAL USE ONLY, AND **NOT FOR FABRICATION**. CONTENT IS PROPRIETARY AND MAY NOT BE USED WITHOUT THE WRITTEN CONSENT OF THE PROJECT TEAM.

MATERIAL: ENTER SPEC

PARENT ASSEMBLY: -69

DO NOT SCALE DRAWING

MECH 4860 - TEAM 19 DESIGN

TITLE: FORK & JIG ROTATION

SIZE: B | DWG. NO.: 1-2 | REV: 0

SCALE: 1:50 | WEIGHT: N/A | SHEET 1 OF 3

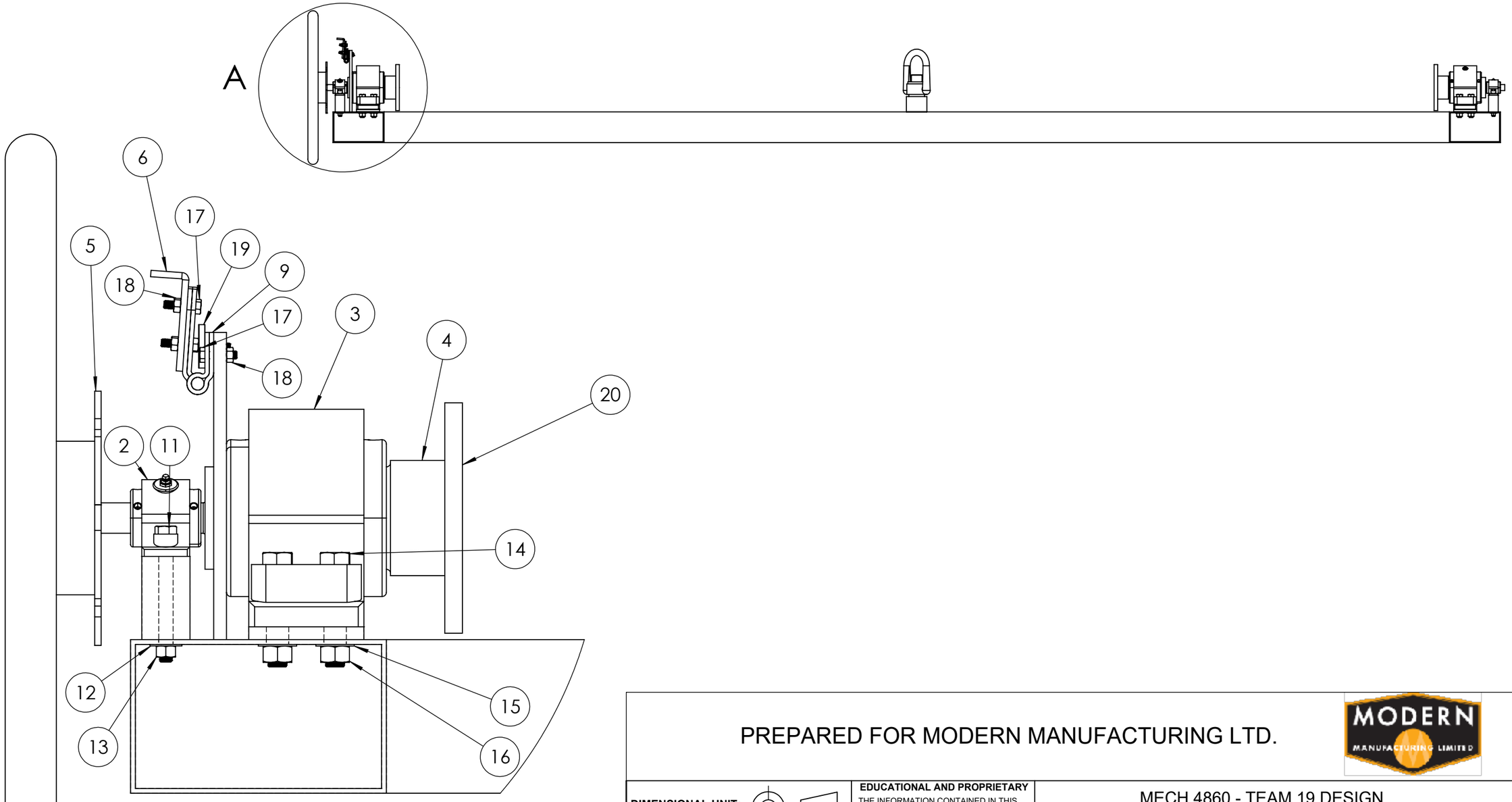

DETAIL A

PREPARED FOR MODERN MANUFACTURING LTD.

DIMENSIONAL UNIT: INCHES

N/A = NOT APPLICABLE

UNLESS OTHERWISE SPECIFIED

0.X ± 0.5
0.XX ± 0.13
0.XXX ± 0.063

EDUCATIONAL AND PROPRIETARY

THE INFORMATION CONTAINED IN THIS DRAWING IS FOR EDUCATIONAL USE ONLY, AND **NOT FOR FABRICATION**. CONTENT IS PROPRIETARY AND MAY NOT BE USED WITHOUT THE WRITTEN CONSENT OF THE PROJECT TEAM.

MATERIAL: ENTER SPEC

PARENT ASSEMBLY: -69

DO NOT SCALE DRAWING

MECH 4860 - TEAM 19 DESIGN

TITLE: FORK & JIG ROTATION

SIZE: **B** | DWG. NO. 1-2 | REV 0

SCALE: 1:50 | WEIGHT: N/A | SHEET 2 OF 3

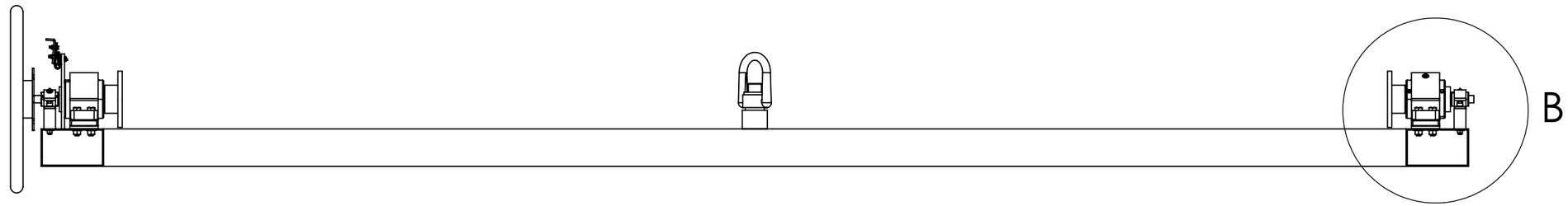

B

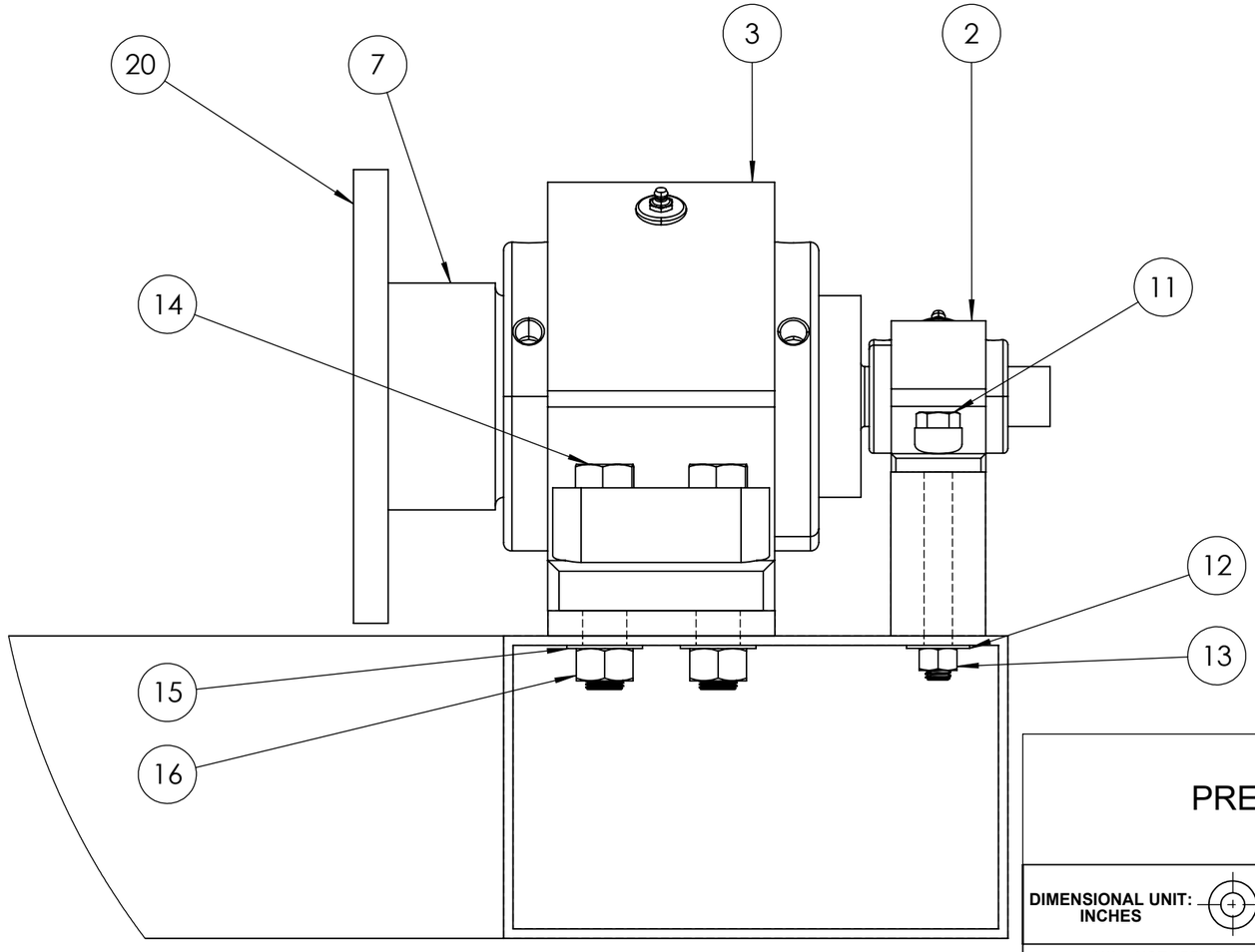

DETAIL B

PREPARED FOR MODERN MANUFACTURING LTD.

DIMENSIONAL UNIT: INCHES N/A = NOT APPLICABLE **UNLESS OTHERWISE SPECIFIED** 0.X ± 0.5 0.XX ± 0.13 0.XXX ± 0.063	**EDUCATIONAL AND PROPRIETARY** THE INFORMATION CONTAINED IN THIS DRAWING IS FOR EDUCATIONAL USE ONLY, AND **NOT FOR FABRICATION**. CONTENT IS PROPRIETARY AND MAY NOT BE USED WITHOUT THE WRITTEN CONSENT OF THE PROJECT TEAM. MATERIAL: ENTER SPEC PARENT ASSEMBLY: -69 **DO NOT SCALE DRAWING**	MECH 4860 - TEAM 19 DESIGN TITLE: FORK & JIG ROTATION SIZE: **B** | DWG. NO.: 1-2 | REV: 0 SCALE: 1:50 | WEIGHT: N/A | SHEET 3 OF 3	

ITEM NO.	PART NUMBER	DESCRIPTION	QTY.	VENDOR	MATERIAL	SHEET REFERENCE
1	1-2-01-01	10" X 6" X .188" TUBE	1	-	CSA G40.21-44W	-
2	1-2-01-02	6" X 4" X .5" TUBE	1	-	CSA G40.21-44W	-
3	1-2-01-03	6" X 8" X .5" TUBE	1	-	CSA G40.21-44W	-
4	1-2-01-04	10" X 6" X .188" TUBE	1	-	CSA G40.21-44W	-
5	1-2-01-05	12" x 8" x .5" SHEET METAL	1	-	AISI 1020 LOW CARBON/LOW TENSILE STEEL	-
6	1-2-01-06	4" X 4" X 3" CUBE	1	-	AISI 1020 LOW CARBON/LOW TENSILE STEEL	-
7	1-2-01-07	1.25" THREAD SIZE FORGED STEEL HOIST RING FOR LIFTING	1	MCMASTER CARR	BLACK OXIDE STEEL	MCMASTER CARR P/N 2994T81
8	1-2-01-08	1.38" X 1.88" X 3.25" CUBE	4	-	AISI 1020 LOW CARBON/LOW TENSILE STEEL	-
9	1-2-01-09	4.5" X 3.34" X 0.5" CUBE	4	-	AISI 1020 LOW CARBON/LOW TENSILE STEEL	-

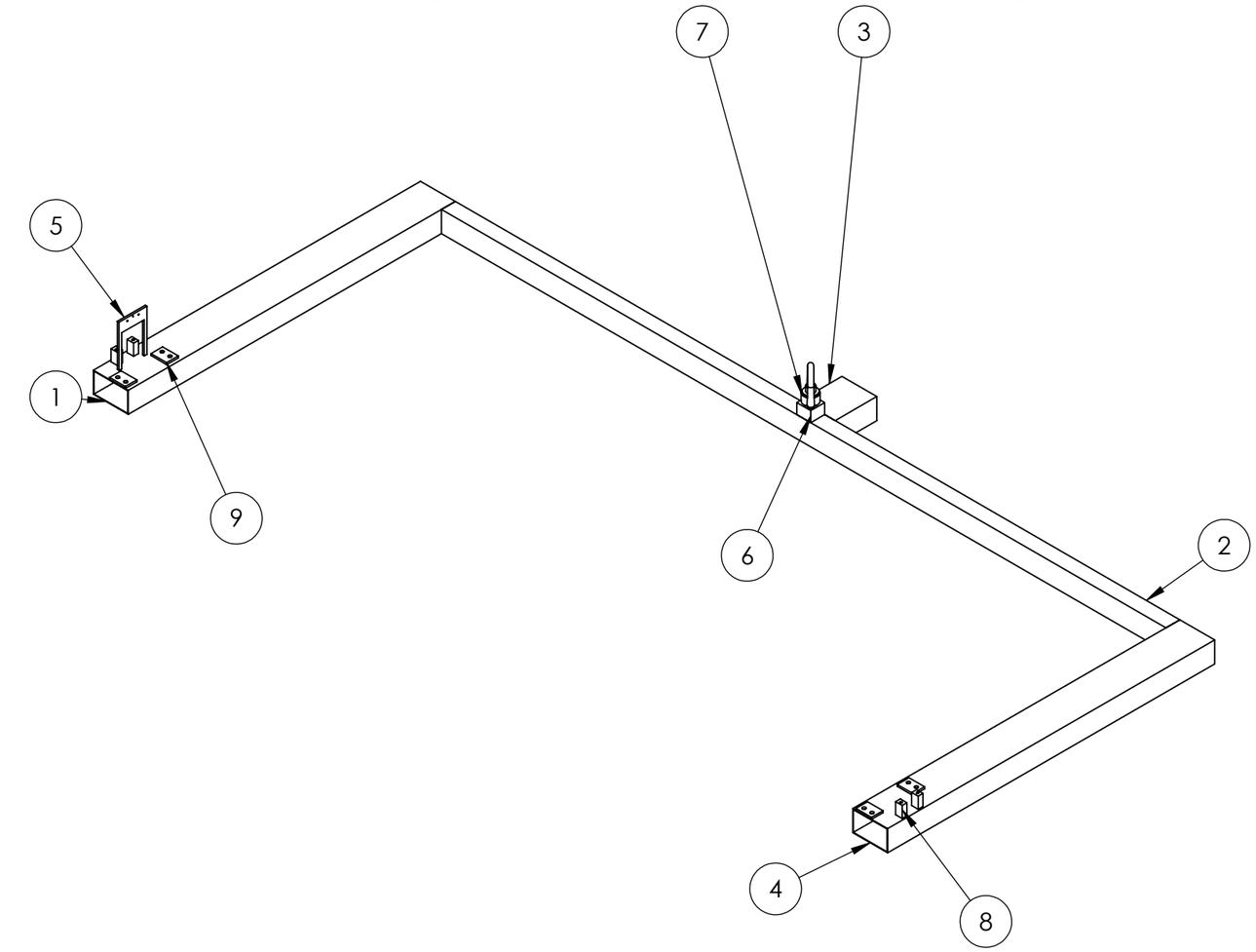

PREPARED FOR MODERN MANUFACTURING LTD.

DIMENSIONAL UNIT: INCHES

N/A = NOT APPLICABLE

UNLESS OTHERWISE SPECIFIED

0.X ± 0.5
0.XX ± 0.13
0.XXX ± 0.063

EDUCATIONAL AND PROPRIETARY
THE INFORMATION CONTAINED IN THIS DRAWING IS FOR EDUCATIONAL USE ONLY, AND **NOT FOR FABRICATION**. CONTENT IS PROPRIETARY AND MAY NOT BE USED WITHOUT THE WRITTEN CONSENT OF THE PROJECT TEAM.

MATERIAL
-

PARENT ASSEMBLY
1-2

DO NOT SCALE DRAWING

MECH 4860 - TEAM 19 DESIGN

TITLE:
FORK ASSEMBLY

SIZE **B** | DWG. NO. 1-2-01 | REV 0

SCALE: 1:50 | WEIGHT: N/A | SHEET 1 OF 3

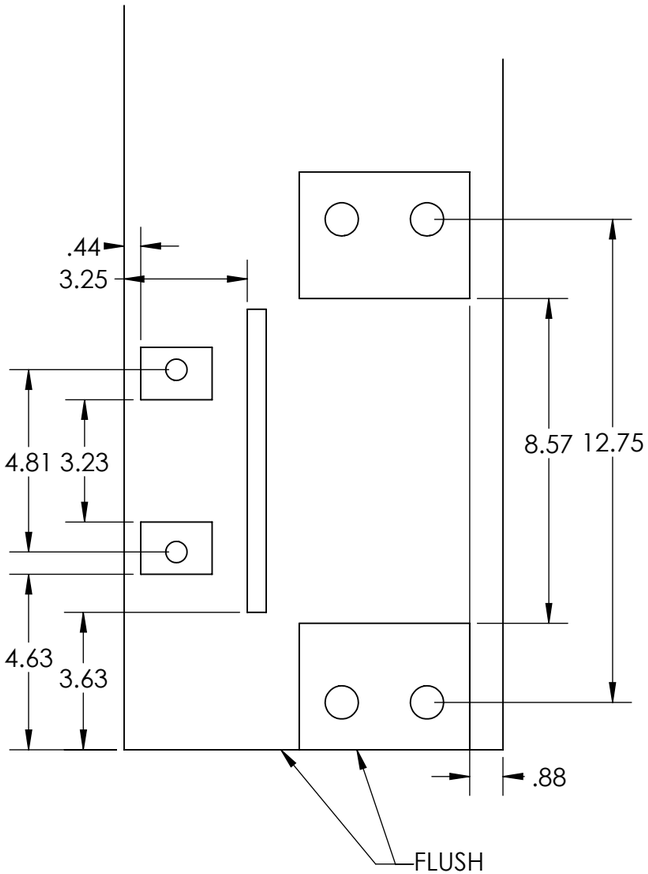

DETAIL A

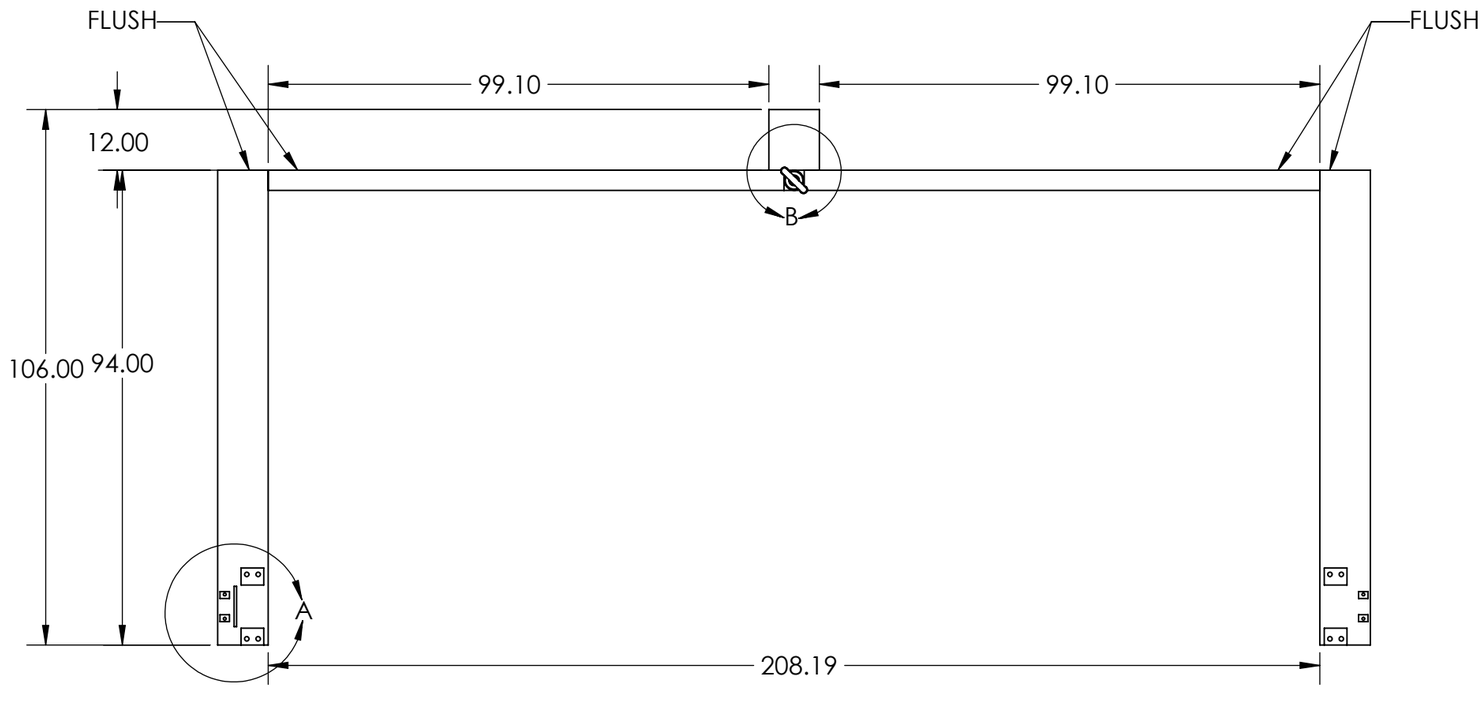

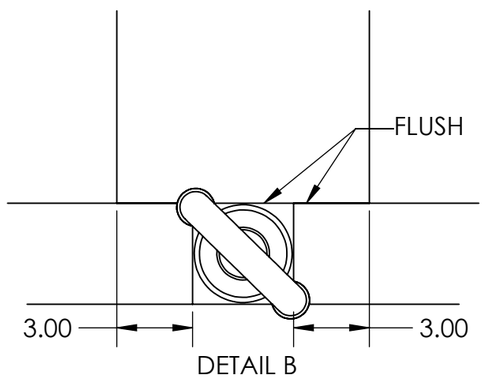

DETAIL B

PREPARED FOR MODERN MANUFACTURING LTD.

DIMENSIONAL UNIT: INCHES	**EDUCATIONAL AND PROPRIETARY** THE INFORMATION CONTAINED IN THIS DRAWING IS FOR EDUCATIONAL USE ONLY, AND **NOT FOR FABRICATION**. CONTENT IS PROPRIETARY AND MAY NOT BE USED WITHOUT THE WRITTEN CONSENT OF THE PROJECT TEAM.	MECH 4860 - TEAM 19 DESIGN	
N/A = NOT APPLICABLE **UNLESS OTHERWISE SPECIFIED** 0.X ± 0.5 0.XX ± 0.13 0.XXX ± 0.063	MATERIAL -	TITLE: FORK ASSEMBLY	
	PARENT ASSEMBLY 1-2	SIZE **B**	DWG. NO. 1-2-01
	DO NOT SCALE DRAWING	SCALE: 1:48	WEIGHT: N/A

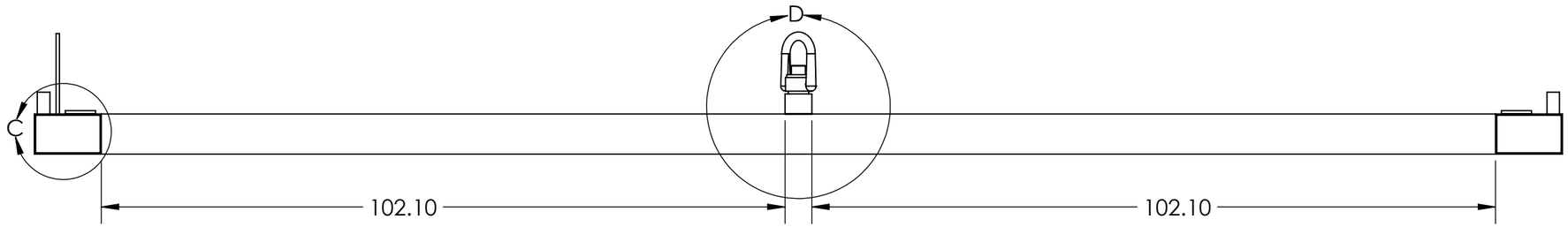

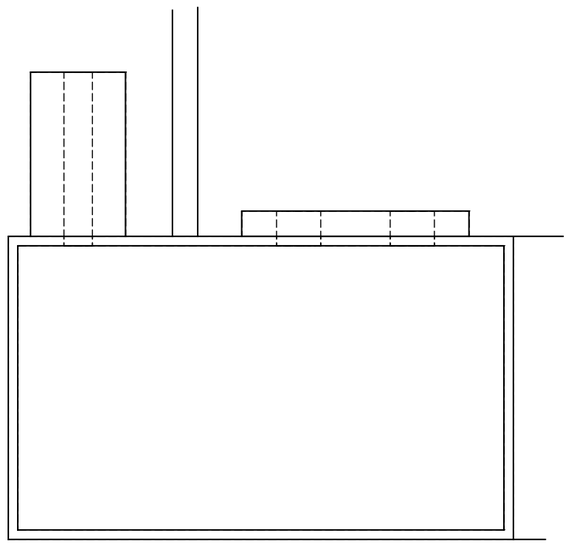

DETAIL C

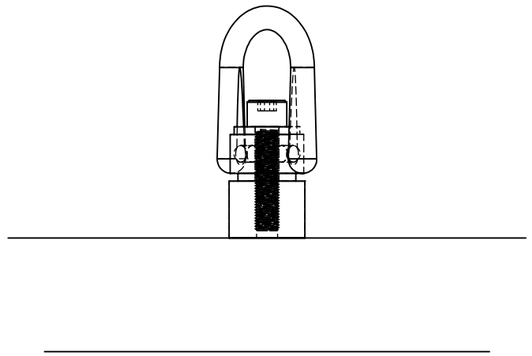

DETAIL D

PREPARED FOR MODERN MANUFACTURING LTD.

DIMENSIONAL UNIT: INCHES N/A = NOT APPLICABLE **UNLESS OTHERWISE SPECIFIED** 0.X ± 0.5 0.XX ± 0.13 0.XXX ± 0.063	**EDUCATIONAL AND PROPRIETARY** THE INFORMATION CONTAINED IN THIS DRAWING IS FOR EDUCATIONAL USE ONLY, AND **NOT FOR FABRICATION**. CONTENT IS PROPRIETARY AND MAY NOT BE USED WITHOUT THE WRITTEN CONSENT OF THE PROJECT TEAM. MATERIAL: - PARENT ASSEMBLY: 1-2 **DO NOT SCALE DRAWING**	MECH 4860 - TEAM 19 DESIGN TITLE: FORK ASSEMBLY SIZE: **B** DWG. NO.: 1-2-01 REV: 0 SCALE: 1:48 WEIGHT: N/A SHEET 3 OF 3	

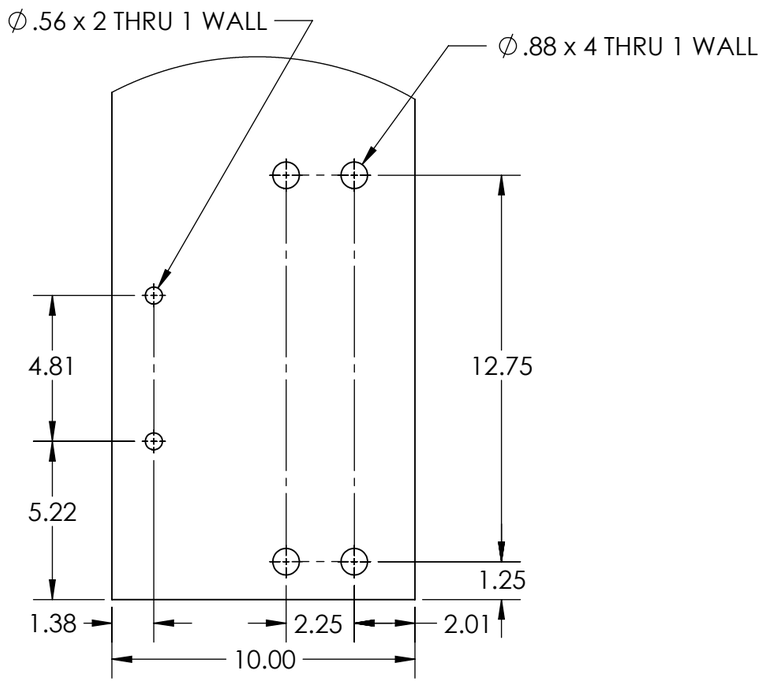

DETAIL A

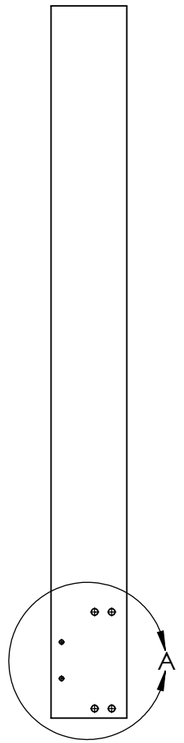

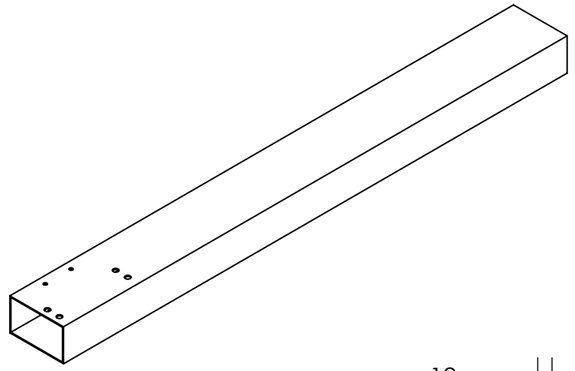

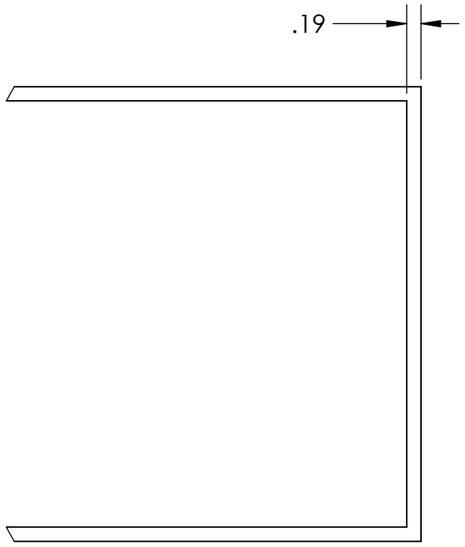

DETAIL B

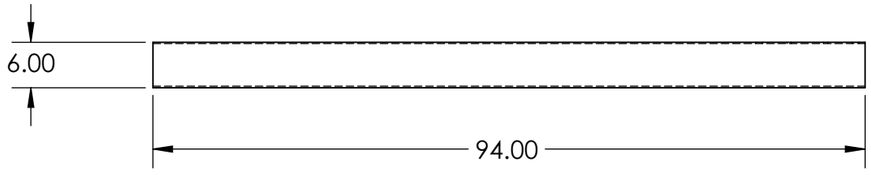

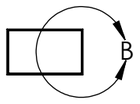

PREPARED FOR MODERN MANUFACTURING LTD.

DIMENSIONAL UNIT: INCHES

N/A = NOT APPLICABLE

UNLESS OTHERWISE SPECIFIED

0.X ± 0.5
0.XX ± 0.13
0.XXX ± 0.063

EDUCATIONAL AND PROPRIETARY
THE INFORMATION CONTAINED IN THIS DRAWING IS FOR EDUCATIONAL USE ONLY, AND **NOT FOR FABRICATION**. CONTENT IS PROPRIETARY AND MAY NOT BE USED WITHOUT THE WRITTEN CONSENT OF THE PROJECT TEAM.

MATERIAL
CSA G40.21-44W

PARENT ASSEMBLY
1-2-01

DO NOT SCALE DRAWING

MECH 4860 - TEAM 19 DESIGN

TITLE:
RIGHT FORK ARM

SIZE	DWG. NO.	REV
B	1-2-01-01	0

SCALE: 1:20 | WEIGHT: 133.63 LB | SHEET 1 OF 1

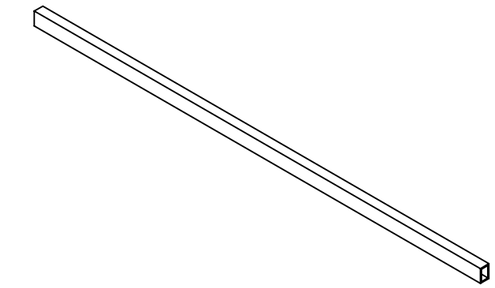

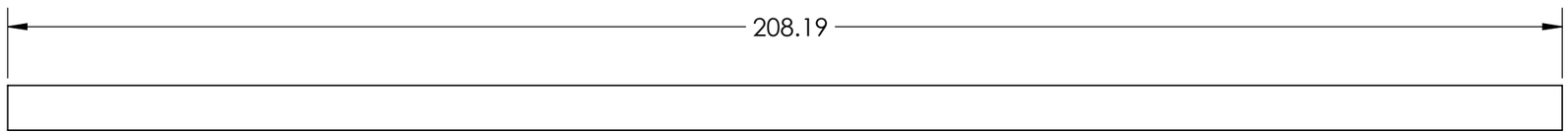

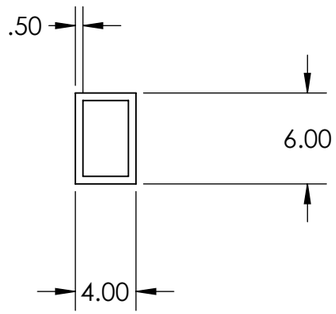

PREPARED FOR MODERN MANUFACTURING LTD.

DIMENSIONAL UNIT: INCHES N/A = NOT APPLICABLE **UNLESS OTHERWISE SPECIFIED** 0.X ± 0.5 0.XX ± 0.13 0.XXX ± 0.063	**EDUCATIONAL AND PROPRIETARY** THE INFORMATION CONTAINED IN THIS DRAWING IS FOR EDUCATIONAL USE ONLY, AND **NOT FOR FABRICATION**. CONTENT IS PROPRIETARY AND MAY NOT BE USED WITHOUT THE WRITTEN CONSENT OF THE PROJECT TEAM. MATERIAL: CSA G40.21-44W PARENT ASSEMBLY: 1-2-01 **DO NOT SCALE DRAWING**	MECH 4860 - TEAM 19 DESIGN TITLE: FORK LONG BEAM SIZE **B** | DWG. NO. 1-2-01-02 | REV 0 SCALE: 1:50 | WEIGHT: 552.70 LB | SHEET 1 OF 1	

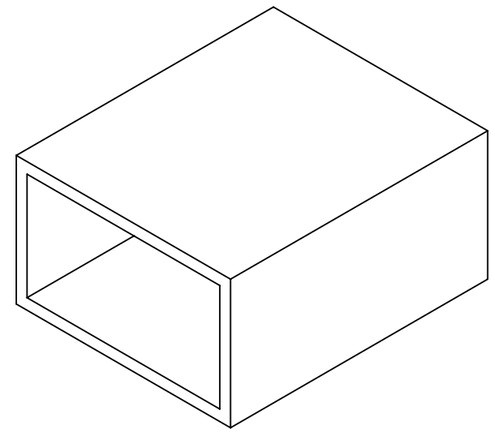

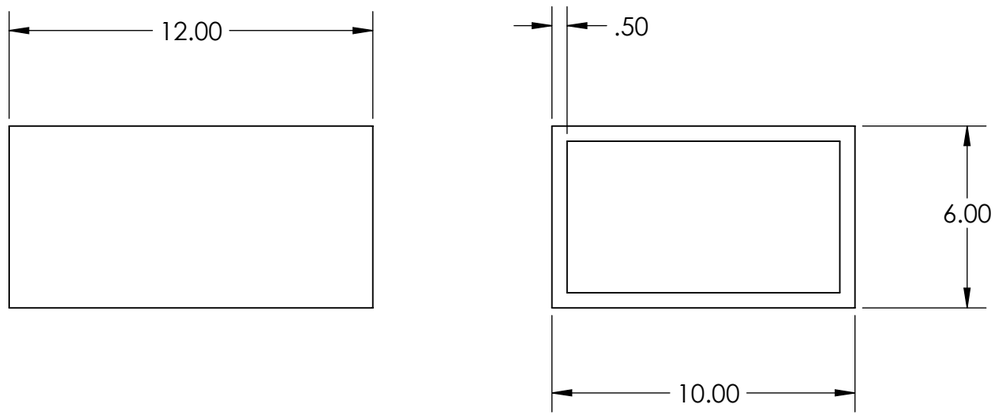

PREPARED FOR MODERN MANUFACTURING LTD.

DIMENSIONAL UNIT: INCHES

N/A = NOT APPLICABLE

UNLESS OTHERWISE SPECIFIED

0.X ± 0.5
0.XX ± 0.13
0.XXX ± 0.063

EDUCATIONAL AND PROPRIETARY

THE INFORMATION CONTAINED IN THIS DRAWING IS FOR EDUCATIONAL USE ONLY, AND **NOT FOR FABRICATION**. CONTENT IS PROPRIETARY AND MAY NOT BE USED WITHOUT THE WRITTEN CONSENT OF THE PROJECT TEAM.

MATERIAL
CSA G40.21-44W

PARENT ASSEMBLY
1-2-01

DO NOT SCALE DRAWING

MECH 4860 - TEAM 19 DESIGN

TITLE:
FORK SHANK

SIZE
B

DWG. NO.
1-2-01-03

REV
0

SCALE: 1:5

WEIGHT: 44.52 LB

SHEET 1 OF 1

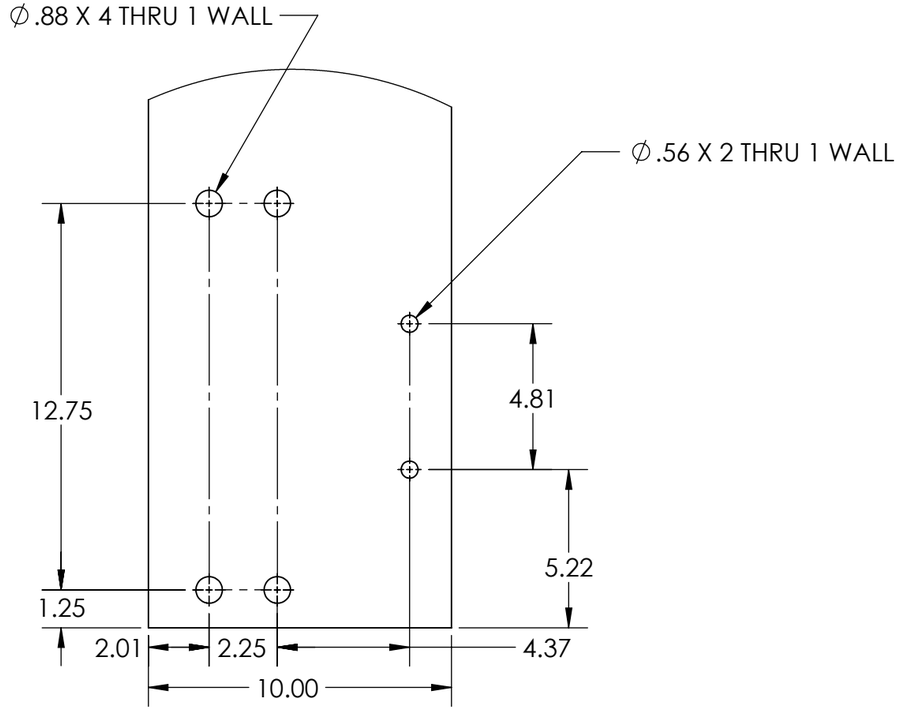

DETAIL A

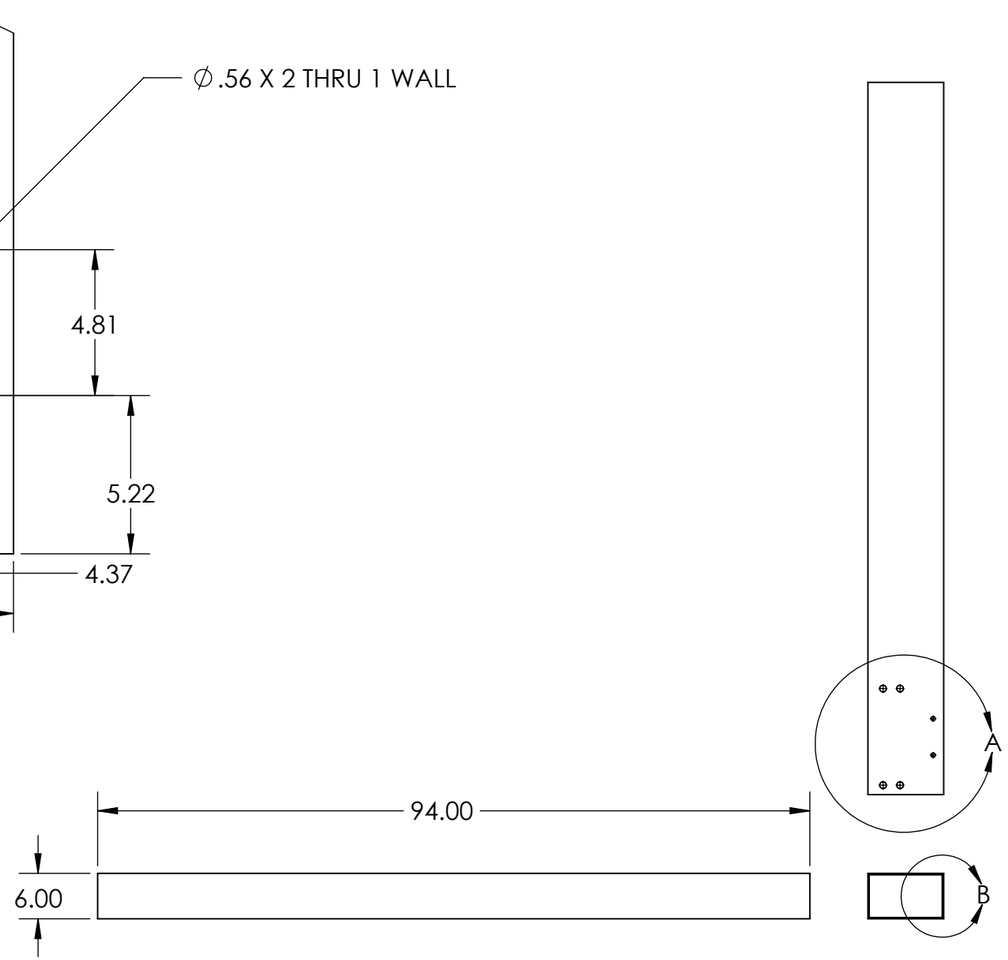

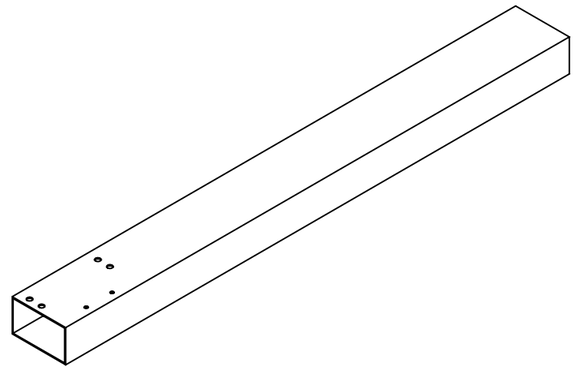

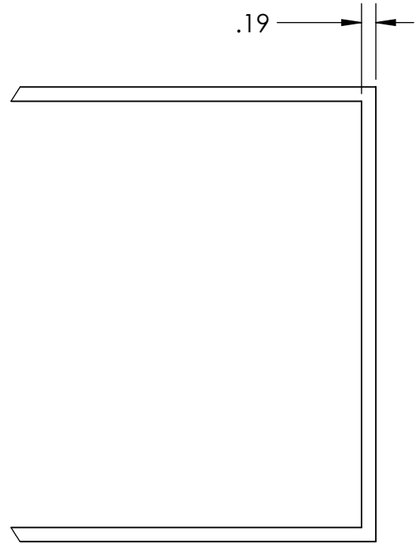

DETAIL B

PREPARED FOR MODERN MANUFACTURING LTD.

DIMENSIONAL UNIT: INCHES N/A = NOT APPLICABLE **UNLESS OTHERWISE SPECIFIED** 0.X ± 0.5 0.XX ± 0.13 0.XXX ± 0.063	**EDUCATIONAL AND PROPRIETARY** THE INFORMATION CONTAINED IN THIS DRAWING IS FOR EDUCATIONAL USE ONLY, AND **NOT FOR FABRICATION**. CONTENT IS PROPRIETARY AND MAY NOT BE USED WITHOUT THE WRITTEN CONSENT OF THE PROJECT TEAM. MATERIAL CSA G40.21-44W PARENT ASSEMBLY 1-2-01 **DO NOT SCALE DRAWING**	MECH 4860 - TEAM 19 DESIGN TITLE: FORK LEFT ARM SIZE **B** | DWG. NO. 1-2-01-04 | REV 0 SCALE: 1:20 | WEIGHT: 133.63 LB | SHEET 1 OF 1	

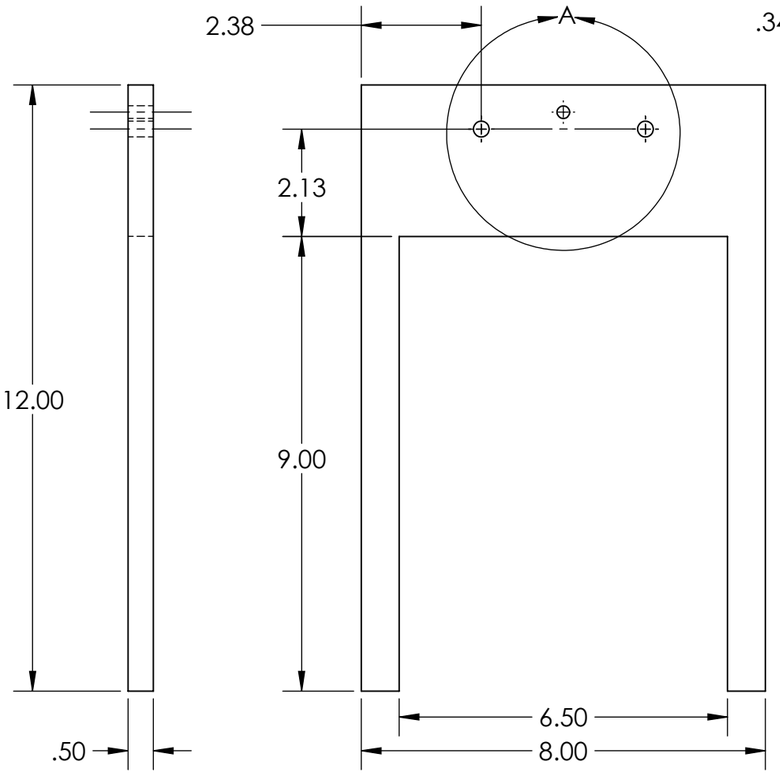

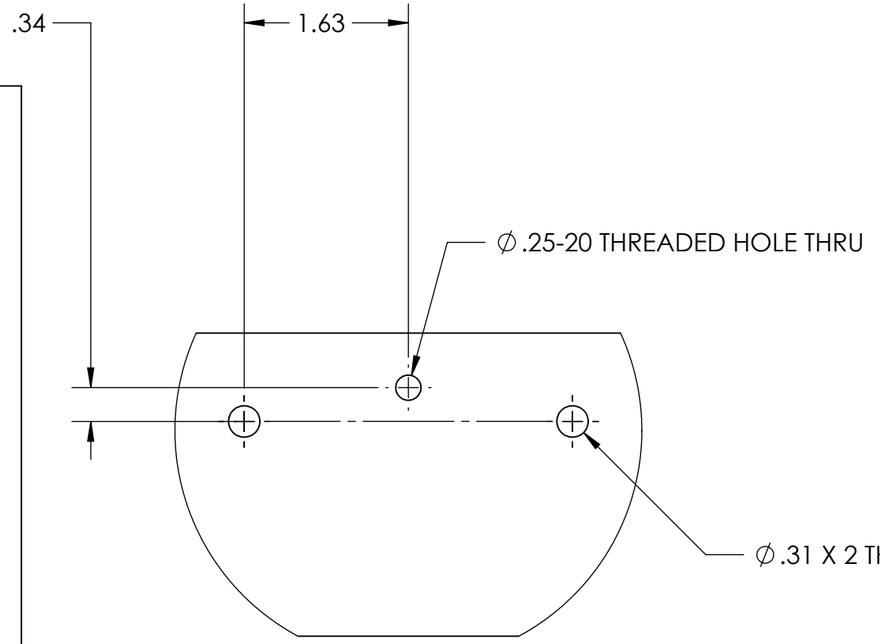

DETAIL A

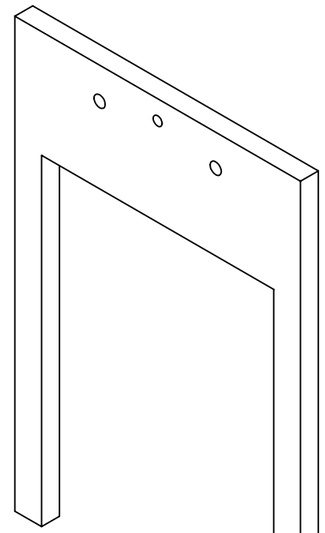

PREPARED FOR MODERN MANUFACTURING LTD.

DIMENSIONAL UNIT: INCHES

N/A = NOT APPLICABLE

UNLESS OTHERWISE SPECIFIED

0.X ± 0.5
0.XX ± 0.13
0.XXX ± 0.063

EDUCATIONAL AND PROPRIETARY

THE INFORMATION CONTAINED IN THIS DRAWING IS FOR EDUCATIONAL USE ONLY, AND **NOT FOR FABRICATION**. CONTENT IS PROPRIETARY AND MAY NOT BE USED WITHOUT THE WRITTEN CONSENT OF THE PROJECT TEAM.

MATERIAL
AISI 1020 STEEL

PARENT ASSEMBLY
1-2-01

DO NOT SCALE DRAWING

MECH 4860 - TEAM 19 DESIGN

TITLE:
HAND WHEEL LOCK STAND

SIZE	DWG. NO.	REV
B	1-2-01-05	0

SCALE: 1:5 | WEIGHT: 5.32 LB | SHEET 1 OF 1

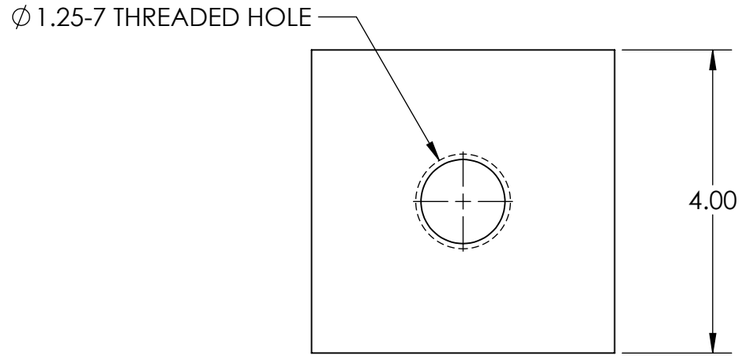

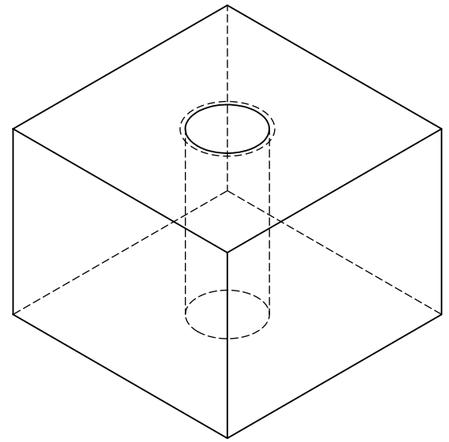

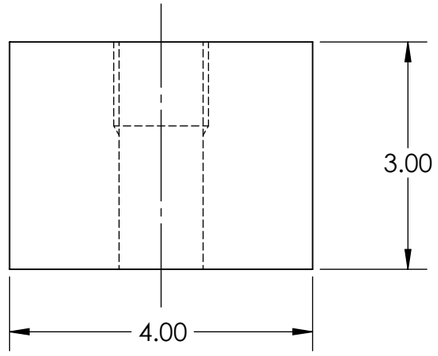

PREPARED FOR MODERN MANUFACTURING LTD.

DIMENSIONAL UNIT: INCHES

N/A = NOT APPLICABLE

UNLESS OTHERWISE SPECIFIED

0.X ± 0.5
0.XX ± 0.13
0.XXX ± 0.063

EDUCATIONAL AND PROPRIETARY
THE INFORMATION CONTAINED IN THIS DRAWING IS FOR EDUCATIONAL USE ONLY, AND **NOT FOR FABRICATION**. CONTENT IS PROPRIETARY AND MAY NOT BE USED WITHOUT THE WRITTEN CONSENT OF THE PROJECT TEAM.

MATERIAL
AISI 1020 STEEL

PARENT ASSEMBLY
1-2-01

DO NOT SCALE DRAWING

MECH 4860 - TEAM 19 DESIGN

TITLE:
LIFTING LUG BASE

SIZE
B

DWG. NO.
1-2-01-06

REV
0

SCALE: 1:2

WEIGHT: 12.79 LB

SHEET 1 OF 1

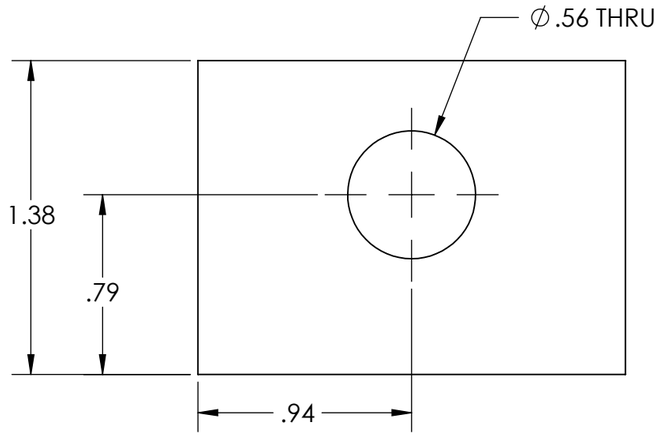

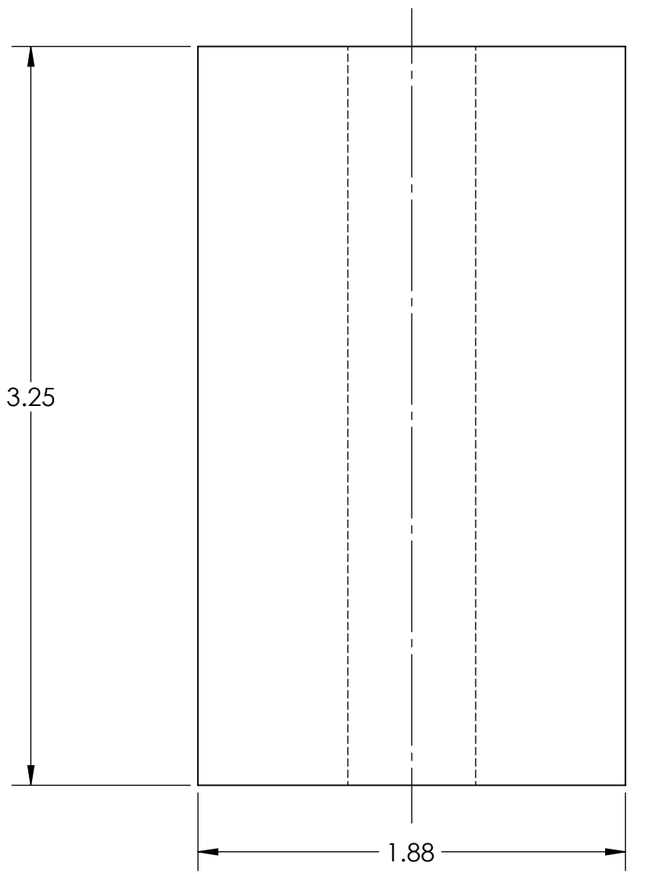

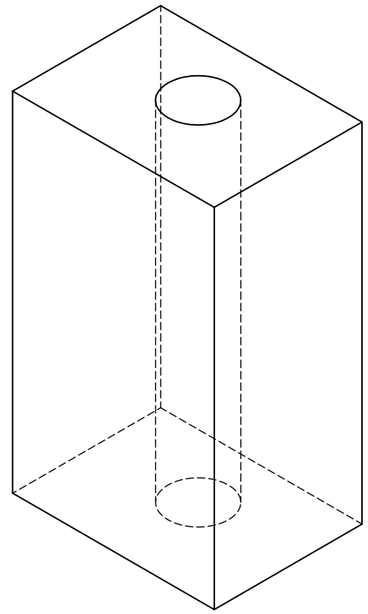

PREPARED FOR MODERN MANUFACTURING LTD.

DIMENSIONAL UNIT: INCHES

N/A = NOT APPLICABLE

UNLESS OTHERWISE SPECIFIED

0.X ± 0.5
0.XX ± 0.13
0.XXX ± 0.063

EDUCATIONAL AND PROPRIETARY
THE INFORMATION CONTAINED IN THIS DRAWING IS FOR EDUCATIONAL USE ONLY, AND **NOT FOR FABRICATION**. CONTENT IS PROPRIETARY AND MAY NOT BE USED WITHOUT THE WRITTEN CONSENT OF THE PROJECT TEAM.

MATERIAL
AISI 1020 LOW CARBON/LOW TENSILE STEEL

PARENT ASSEMBLY
1-2-01

DO NOT SCALE DRAWING

MECH 4860 - TEAM 19 DESIGN

TITLE:
BEARING BASE 1
FOR 1.1875" BORE DIAMETER BEARING

SIZE	DWG. NO.	REV
B	1-2-01-08	0

SCALE: 1:1	WEIGHT: 2.18 LB	SHEET 1 OF 1

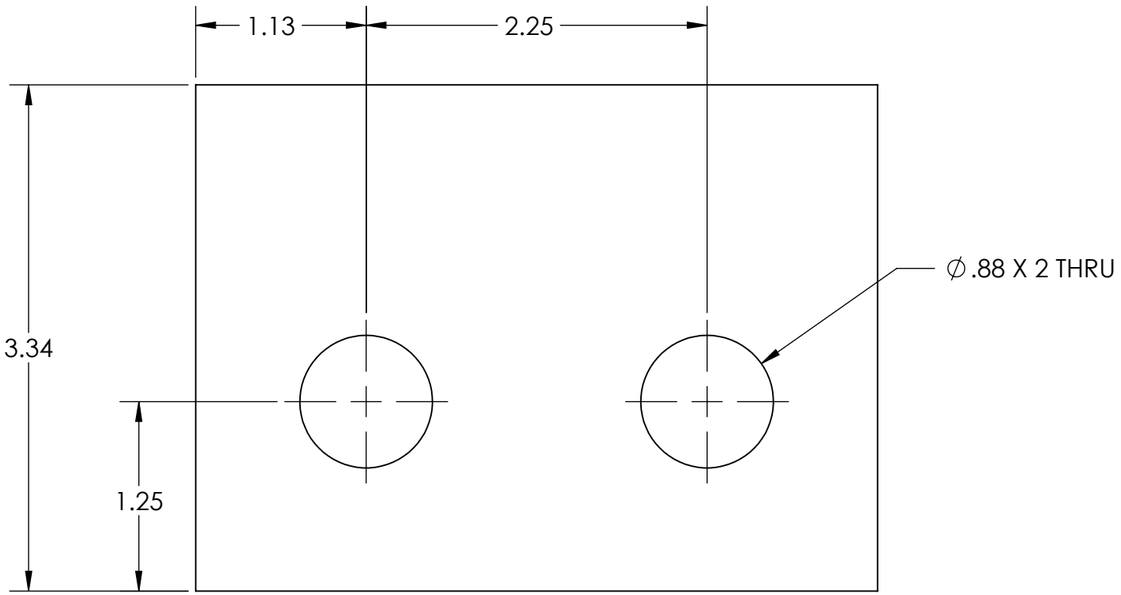

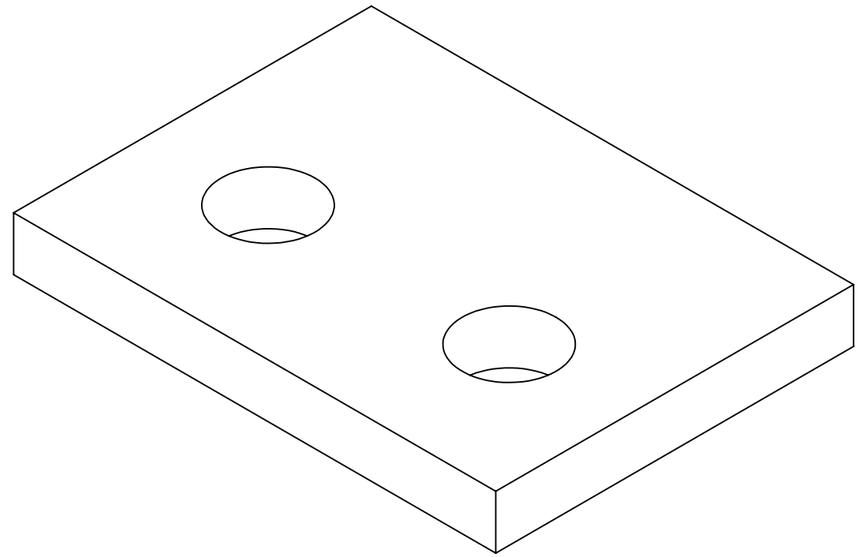

PREPARED FOR MODERN MANUFACTURING LTD.

DIMENSIONAL UNIT: INCHES N/A = NOT APPLICABLE **UNLESS OTHERWISE SPECIFIED** 0.X ± 0.5 0.XX ± 0.13 0.XXX ± 0.063	**EDUCATIONAL AND PROPRIETARY** THE INFORMATION CONTAINED IN THIS DRAWING IS FOR EDUCATIONAL USE ONLY, AND **NOT FOR FABRICATION**. CONTENT IS PROPRIETARY AND MAY NOT BE USED WITHOUT THE WRITTEN CONSENT OF THE PROJECT TEAM. MATERIAL: AISI 1020 STEEL PARENT ASSEMBLY: 1-2-01 **DO NOT SCALE DRAWING**	MECH 4860 - TEAM 19 DESIGN TITLE: BEARING BASE 2 FOR 4.0000" BORE DIAMETER BEARING	
		SIZE: **B**	DWG. NO.: 1-2-01-09 / REV: 0
		SCALE: 1:1	WEIGHT: 1.97 LB / SHEET 1 OF 1

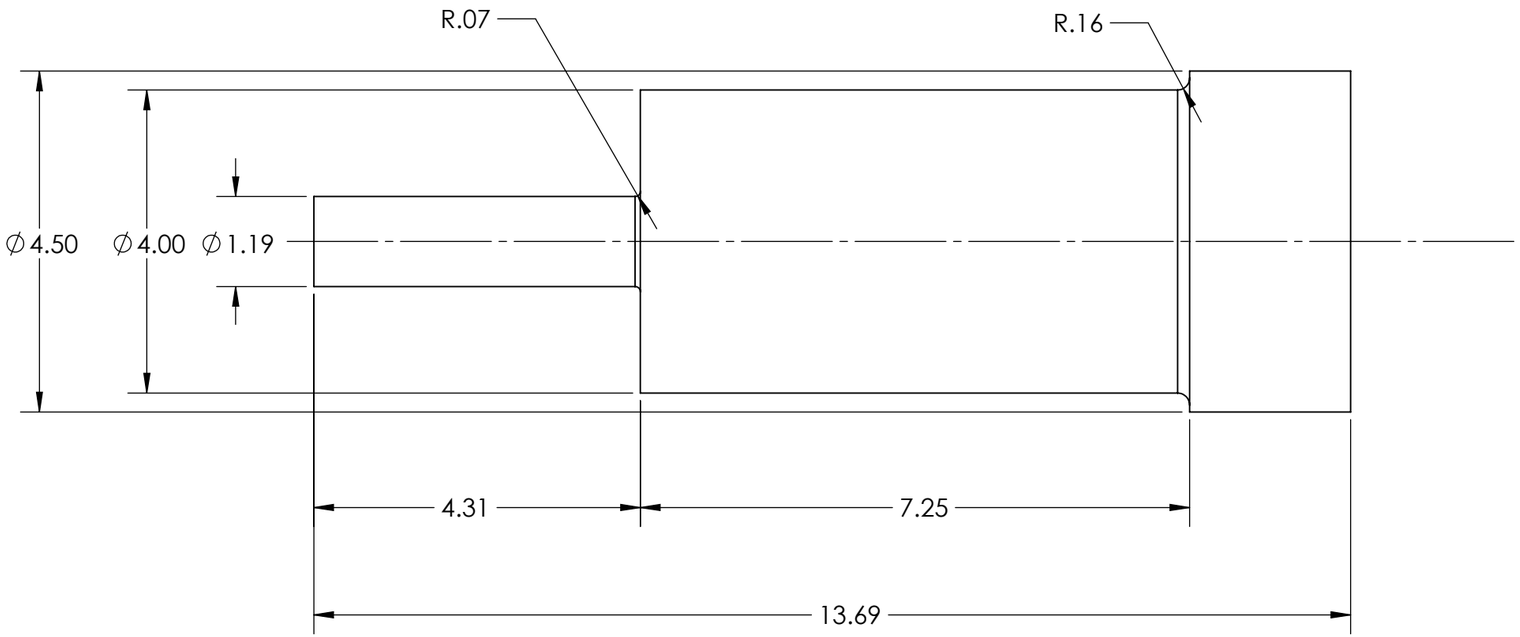

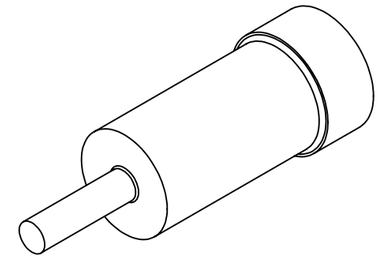

PREPARED FOR MODERN MANUFACTURING LTD.

DIMENSIONAL UNIT: INCHES

N/A = NOT APPLICABLE

UNLESS OTHERWISE SPECIFIED

0.X ± 0.5
0.XX ± 0.13
0.XXX ± 0.063

EDUCATIONAL AND PROPRIETARY

THE INFORMATION CONTAINED IN THIS DRAWING IS FOR EDUCATIONAL USE ONLY, AND **NOT FOR FABRICATION**. CONTENT IS PROPRIETARY AND MAY NOT BE USED WITHOUT THE WRITTEN CONSENT OF THE PROJECT TEAM.

MATERIAL
AISI 4340 ALLOY STEEL

PARENT ASSEMBLY
1-2

DO NOT SCALE DRAWING

MECH 4860 - TEAM 19 DESIGN

TITLE:
RIGHT HAND SIDE SHAFT

SIZE	DWG. NO.	REV
B	1-2-04-01	0

SCALE: 1:2 | WEIGHT: 36.80 LB | SHEET 1 OF 1

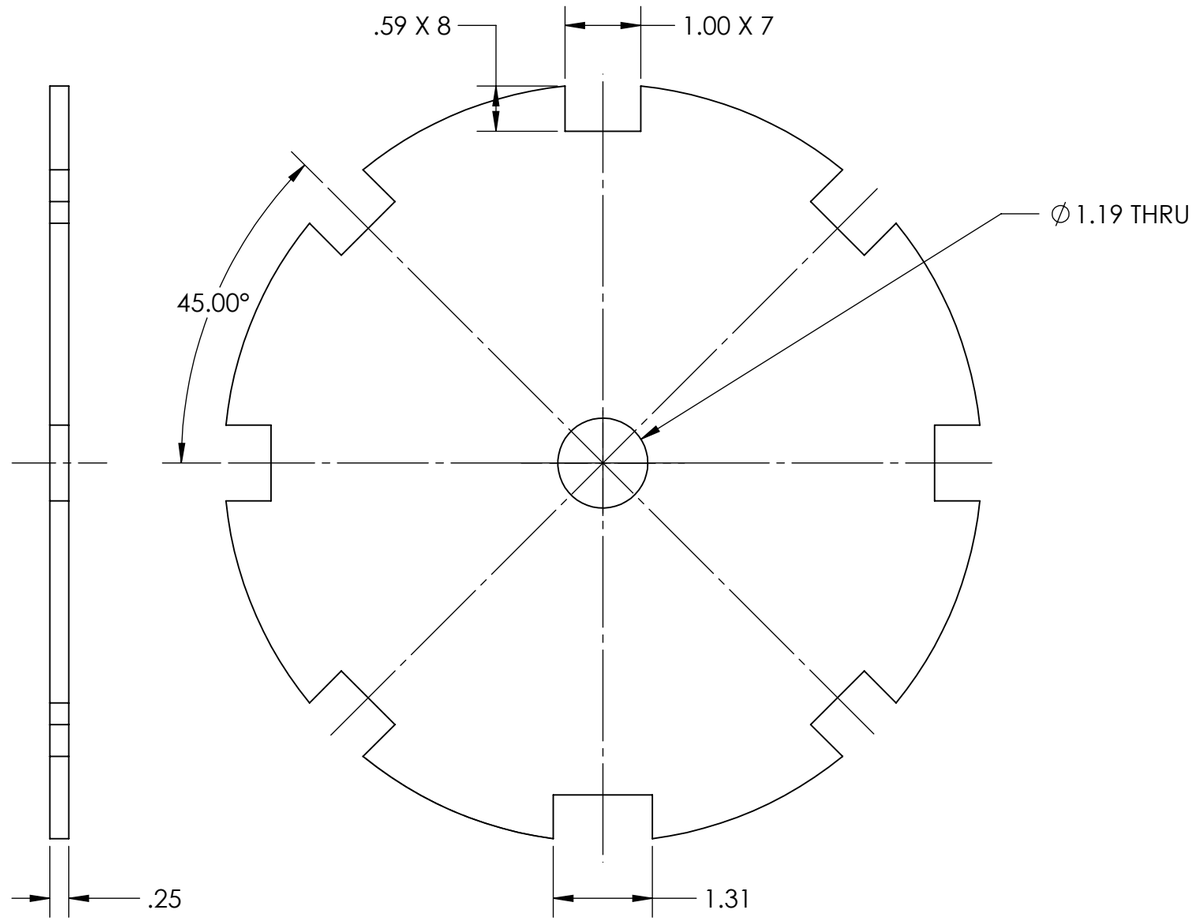

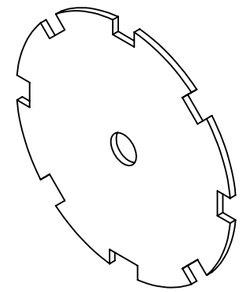

PREPARED FOR MODERN MANUFACTURING LTD.

DIMENSIONAL UNIT: INCHES	**EDUCATIONAL AND PROPRIETARY** THE INFORMATION CONTAINED IN THIS DRAWING IS FOR EDUCATIONAL USE ONLY, AND **NOT FOR FABRICATION**. CONTENT IS PROPRIETARY AND MAY NOT BE USED WITHOUT THE WRITTEN CONSENT OF THE PROJECT TEAM.	MECH 4860 - TEAM 19 DESIGN	
N/A = NOT APPLICABLE **UNLESS OTHERWISE SPECIFIED** 0.X ± 0.5 0.XX ± 0.13 0.XXX ± 0.063	MATERIAL AISI 1020 STEEL	TITLE: HAND WHEEL LOCK PLATE	
	PARENT ASSEMBLY 1-2	SIZE **B**	DWG. NO. 1-2-04-02 REV 0
	DO NOT SCALE DRAWING	SCALE: 1:2	WEIGHT: 5.16 LB SHEET 1 OF 1

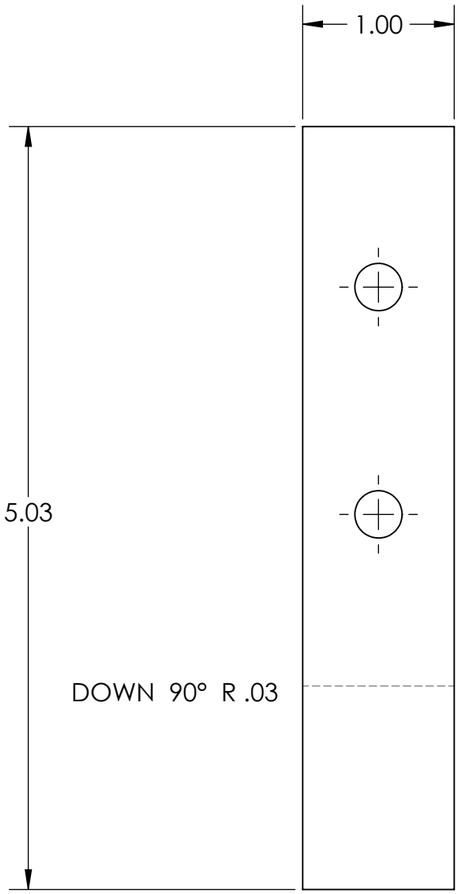

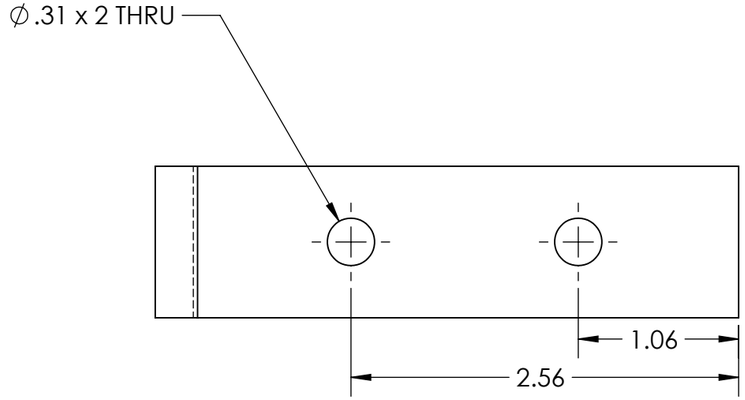

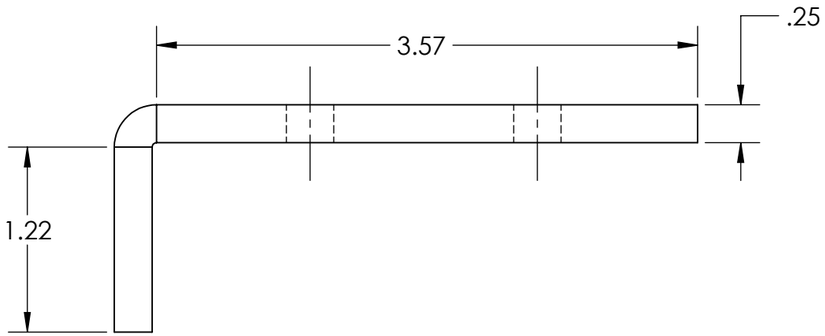

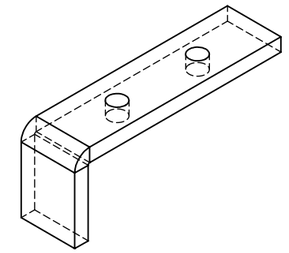

PREPARED FOR MODERN MANUFACTURING LTD.

DIMENSIONAL UNIT: INCHES

N/A = NOT APPLICABLE

UNLESS OTHERWISE SPECIFIED

0.X ± 0.5
0.XX ± 0.13
0.XXX ± 0.063

EDUCATIONAL AND PROPRIETARY
THE INFORMATION CONTAINED IN THIS DRAWING IS FOR EDUCATIONAL USE ONLY, AND **NOT FOR FABRICATION**. CONTENT IS PROPRIETARY AND MAY NOT BE USED WITHOUT THE WRITTEN CONSENT OF THE PROJECT TEAM.

MATERIAL
AISI 1020 STEEL

PARENT ASSEMBLY
1-2

DO NOT SCALE DRAWING

MECH 4860 - TEAM 19 DESIGN

TITLE:
HAND WHEEL LOCK LATCH

SIZE	DWG. NO.	REV
B	1-2-04-03	0

SCALE: 1:1 | WEIGHT: 0.35 LB | SHEET 1 OF 1

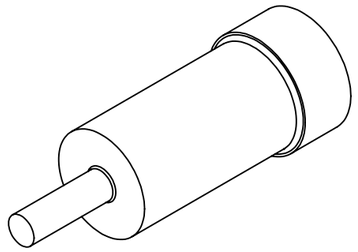

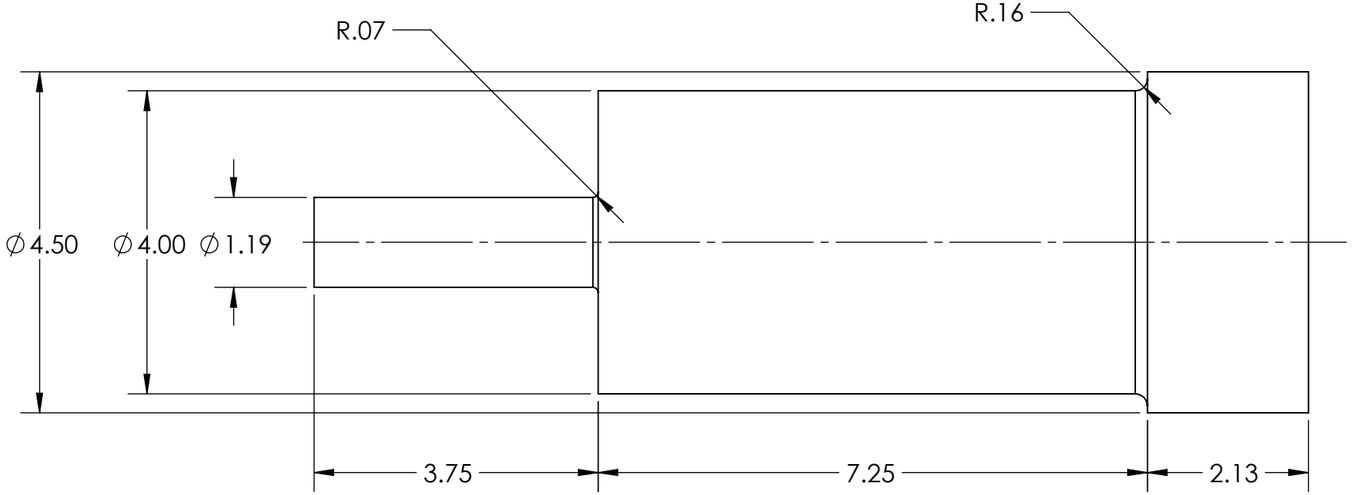

PREPARED FOR MODERN MANUFACTURING LTD.

DIMENSIONAL UNIT: INCHES	**EDUCATIONAL AND PROPRIETARY** THE INFORMATION CONTAINED IN THIS DRAWING IS FOR EDUCATIONAL USE ONLY, AND **NOT FOR FABRICATION**. CONTENT IS PROPRIETARY AND MAY NOT BE USED WITHOUT THE WRITTEN CONSENT OF THE PROJECT TEAM.	MECH 4860 - TEAM 19 DESIGN	
N/A = NOT APPLICABLE **UNLESS OTHERWISE SPECIFIED** 0.X ± 0.5 0.XX ± 0.13 0.XXX ± 0.063	MATERIAL AISI 4340 ALLOY STEEL	TITLE: LEFT HAND SIDE SHAFT	
	PARENT ASSEMBLY 1-2	SIZE **B**	DWG. NO. 1-2-04-04 REV 0
	DO NOT SCALE DRAWING	SCALE: 1:2	WEIGHT: 36.62 LB SHEET 1 OF 1

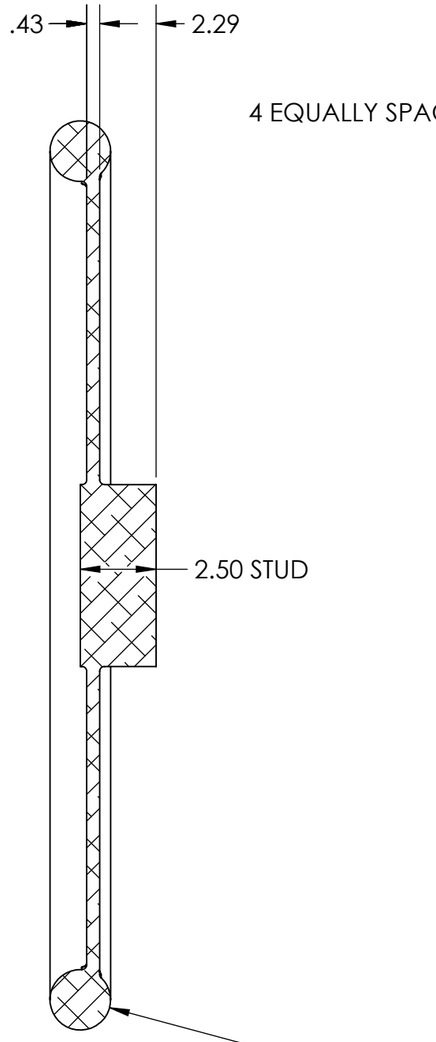

SECTION B-B
SCALE 1 : 5

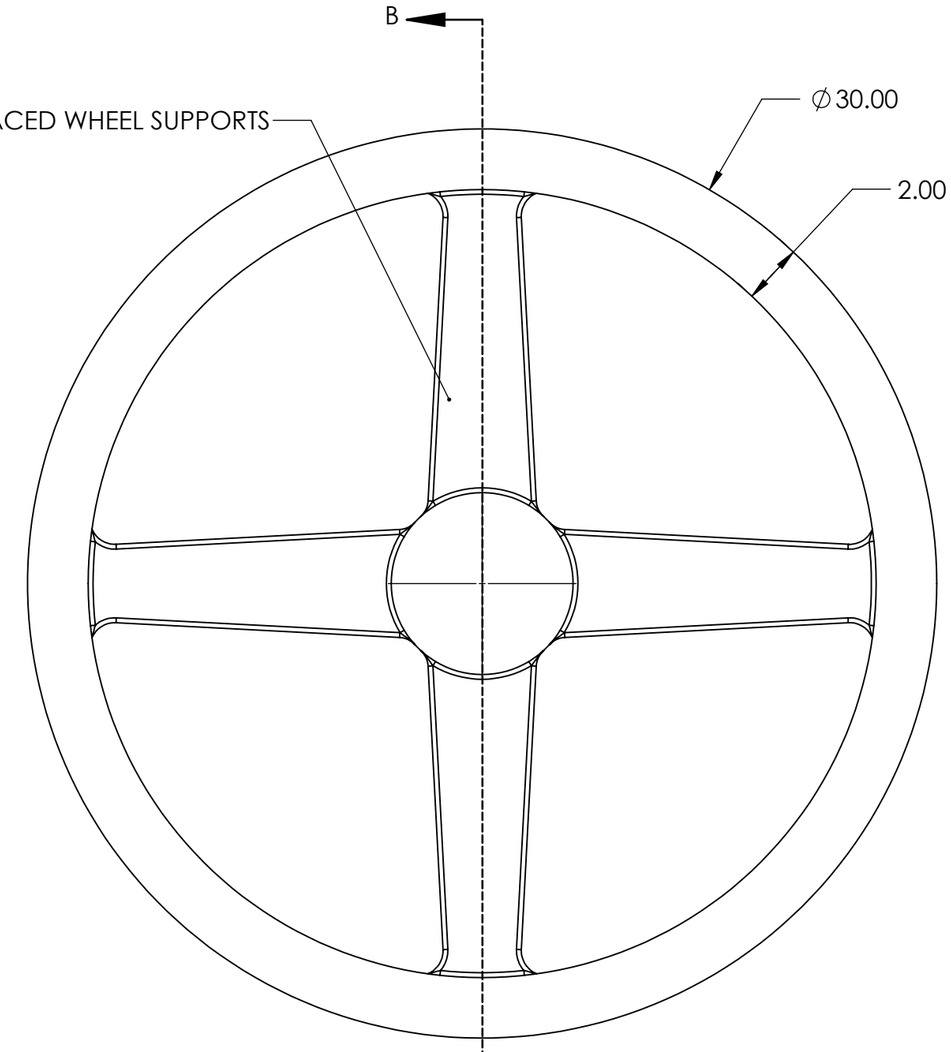

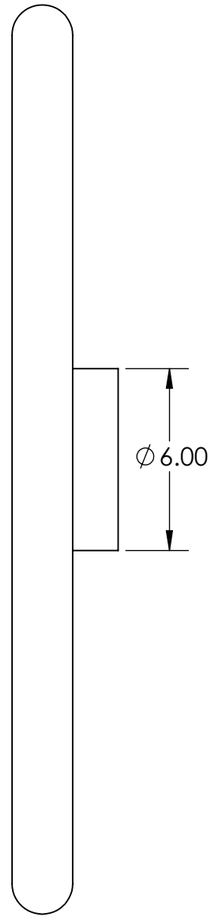

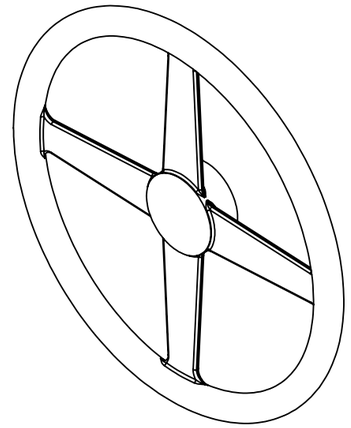

PREPARED FOR MODERN MANUFACTURING LTD.

DIMENSIONAL UNIT: INCHES

N/A = NOT APPLICABLE

UNLESS OTHERWISE SPECIFIED

0.X ± 0.5
0.XX ± 0.13
0.XXX ± 0.063

EDUCATIONAL AND PROPRIETARY
THE INFORMATION CONTAINED IN THIS DRAWING IS FOR EDUCATIONAL USE ONLY, AND **NOT FOR FABRICATION**. CONTENT IS PROPRIETARY AND MAY NOT BE USED WITHOUT THE WRITTEN CONSENT OF THE PROJECT TEAM.

MATERIAL
319 ALUMINUM

PARENT ASSEMBLY
1-2

DO NOT SCALE DRAWING

MECH 4860 - TEAM 19 DESIGN

TITLE:
HAND WHEEL

SIZE	DWG. NO.	REV
B	1-2-04-05	0

SCALE: 1:10 | WEIGHT: - | SHEET 1 OF 1

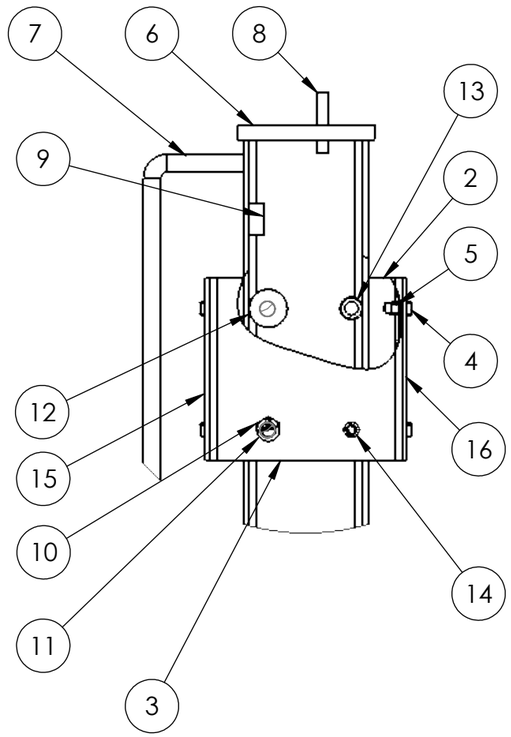

DETAIL C

SCALE 1 : 10

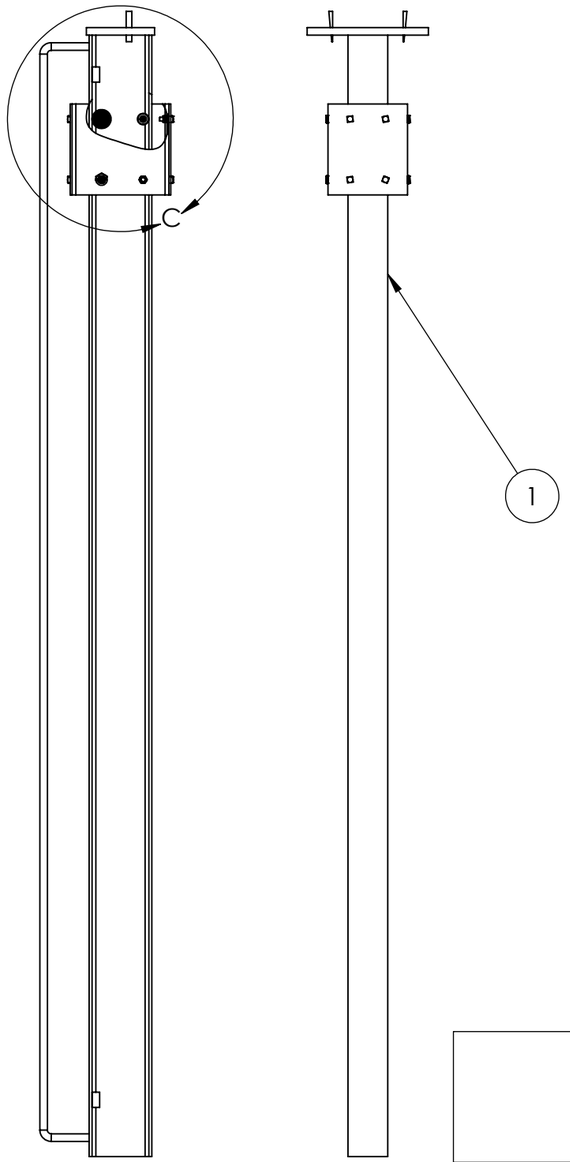

ITEM NO.	PART NUMBER	DESCRIPTION	VENDOR	QTY.	SHEET REFERENCE
1	1-3-01	W18X21 I-BEAM		1	1-3-1
2	1-3-02	VERTICAL TROLLEY FRAME RHS		1	1-3-1
3	1-3-03	VERTICAL TROLLEY FRAME LHS		1	1-3-1
4	1-3-06	0.5"-13 SQUARE HEAD BOLT	MCMASTER - 91465A161	4	
5	1-3-08	0.5"-13 HEX HEAD NUT	MCMASTER-95036A024	4	
6	1-3-11	VERTICAL COLUMN CONNECTING PLATE		1	1-3-2
7	1-3-10	1" DIA PUSH HANDLE		1	1-3-2
8	1-3-12	NONSPARKING WEDGE	MCMASTER-6517A12	2	
9	1-3-13	VERTICAL TROLLEY STOPPERS		4	1-3-2
10	1-3-05	1"-14 HEX NUT	MCMASTER-971135A275	4	
11	1-3-07	0.5" SPACER	MCMASTER	4	
12	1-3-04	THREADED-FLANGED TRACK ROLLER	MCMASTER-6318K55	4	
13	1-3-14	ADJUSTABLE SHOULDER THREADED TRACK ROLLER	MCMASTER-3647K17	4	
14	1-3-15	0.625"-18 HEX NUT	MCMASTER-95036A045	4	
15	1-3-17	0.25" VERTICAL TROLLEY FACEPLATE (REAR)		1	1-3-3
16	1-3-16	0.25" VERTICAL TROLLEY FACEPLATE (FRONT/SHANK)		1	1-3-3

ASSEMBLY NOTES:
-ITEM 13 HAS ADJUSTABLE SHOULDER. ONCE VERTICAL TORLLEY IS INSTALLED ON VERTICAL BEAM TIGHTEN PART 13 FOR FULL CONTACT
-ITEM 9 IS INSTALLED 4.2 IN. FROM THE TOP AND 6.5 IN. FROM THE BOTTOM OF VERTICAL BEAM
-ITEM 8 IS PRESSURE FIT WHEN THIS ASSEMBLY IS INSTALLED ON THE HORIZONTAL TROLLEY
-ITEM 6 IS INSTALLED CENTERED ON THE TOP OF THE VERTICAL BEAM

PREPARED FOR MODERN MANUFACTURING LTD.

DIMENSIONAL UNIT: INCHES

N/A = NOT APPLICABLE

UNLESS OTHERWISE SPECIFIED

0.X ± 0.1
0.XX ± 0.06
0.XXX ± 0.030

EDUCATIONAL AND PROPRIETARY
THE INFORMATION CONTAINED IN THIS DRAWING IS FOR EDUCATIONAL USE ONLY, AND **NOT FOR FABRICATION**. CONTENT IS PROPRIETARY AND MAY NOT BE USED WITHOUT THE WRITTEN CONSENT OF THE PROJECT TEAM.

MATERIAL: MANY

PARENT ASSEMBLY: 1-0

DO NOT SCALE DRAWING

MECH 4860 - TEAM 19 DESIGN

TITLE:
Articulating Jig
Vertical Column Assembly

SIZE: B | DWG. NO.: 1-3 | REV: 0

SCALE: NTS | WEIGHT: N/A | SHEET 1 OF 1

SOLIDWORKS Educational Product. For Instructional Use Only.

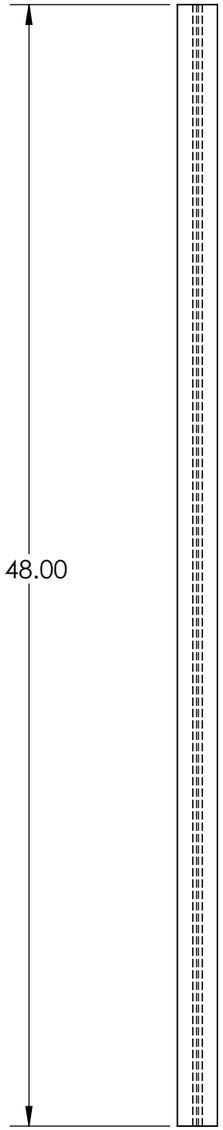

ITEM NO.	PART NUMBER	DESCRIPTION	QTY.
1	1-3-01	W18X21 I-BEAM	1

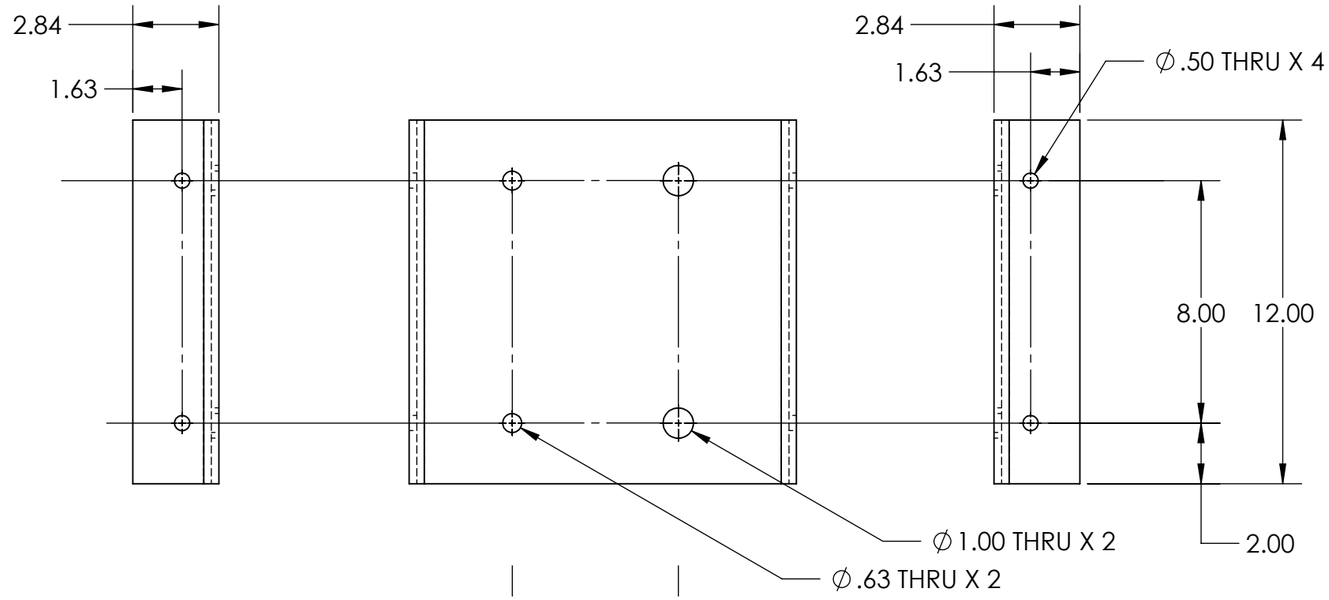

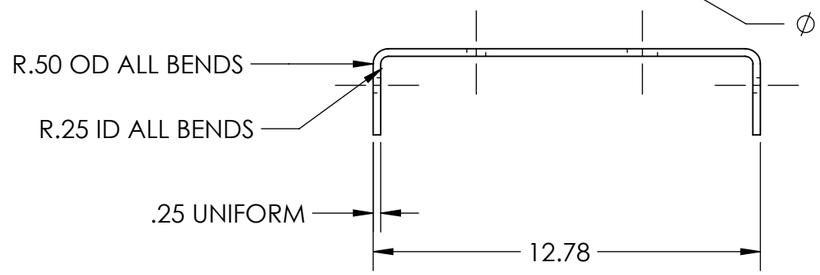

ITEM NO.	PART NUMBER	DESCRIPTION	QTY.
1	1-3-02	VERTICAL TROLLEY FRAME RHS	1

NOTE: PART 4-03 IS A MIRRORED COMPONENT OF PART 4-02

PREPARED FOR MODERN MANUFACTURING LTD.

DIMENSIONAL UNIT: INCHES

N/A = NOT APPLICABLE

UNLESS OTHERWISE SPECIFIED

0.X ± 0.1
0.XX ± 0.06
0.XXX ± 0.030

EDUCATIONAL AND PROPRIETARY
THE INFORMATION CONTAINED IN THIS DRAWING IS FOR EDUCATIONAL USE ONLY, AND **NOT FOR FABRICATION**. CONTENT IS PROPRIETARY AND MAY NOT BE USED WITHOUT THE WRITTEN CONSENT OF THE PROJECT TEAM.

MATERIAL
CSA G40.1-44W

PARENT ASSEMBLY
1-3-0

DO NOT SCALE DRAWING

MECH 4860 - TEAM 19 DESIGN

TITLE:
Vertical Guide
Column, Trolley Frame

SIZE	DWG. NO.	REV
B	1-3-1	0

SCALE: NTS | WEIGHT: N/A | SHEET 1 OF 1

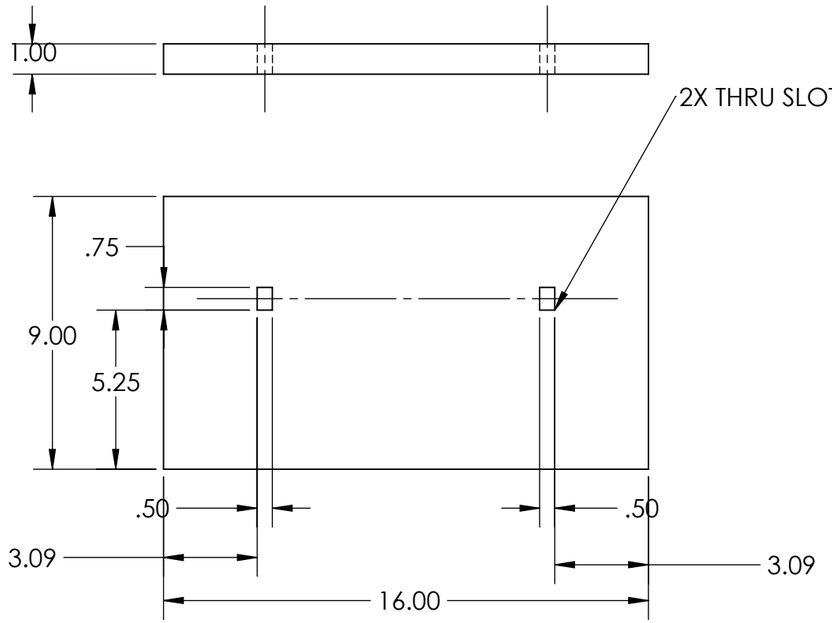

ITEM NO.	PART NUMBER	DESCRIPTION	QTY.
1	1-3-11	VERTICAL COLUMN CONNECTING PLATE	1

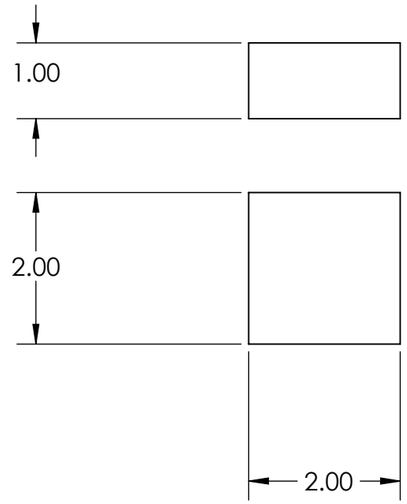

ITEM NO.	PART NUMBER	DESCRIPTION	QTY.
1	1-3-13	2" X 2" X 1" VERTICAL TROLLEY STOPPER	4

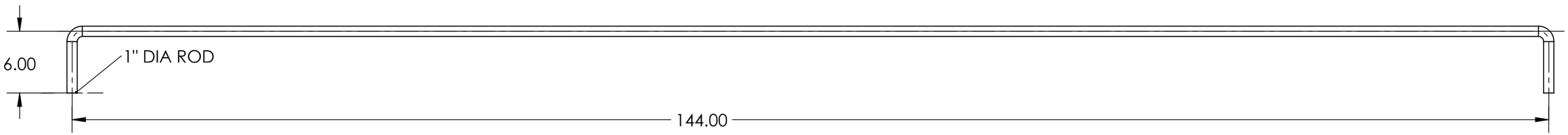

ITEM NO.	PART NUMBER	DESCRIPTION	QTY.
1	1-3-10	1" DIA PUSH HANDLE	1

PREPARED FOR MODERN MANUFACTURING LTD.

DIMENSIONAL UNIT: INCHES

N/A = NOT APPLICABLE

UNLESS OTHERWISE SPECIFIED

0.X ± 0.1
0.XX ± 0.06
0.XXX ± 0.030

EDUCATIONAL AND PROPRIETARY

THE INFORMATION CONTAINED IN THIS DRAWING IS FOR EDUCATIONAL USE ONLY, AND **NOT FOR FABRICATION**. CONTENT IS PROPRIETARY AND MAY NOT BE USED WITHOUT THE WRITTEN CONSENT OF THE PROJECT TEAM.

MATERIAL: ENTER SPEC

PARENT ASSEMBLY: 1-3-0

DO NOT SCALE DRAWING

MECH 4860 - TEAM 19 DESIGN

TITLE:
Vertical Guide
Support Plate, Push Handle, Stoppers

SIZE	DWG. NO.	REV
B	1-3-2	0

SCALE: NTS | WEIGHT: N/A | SHEET 1 OF 1

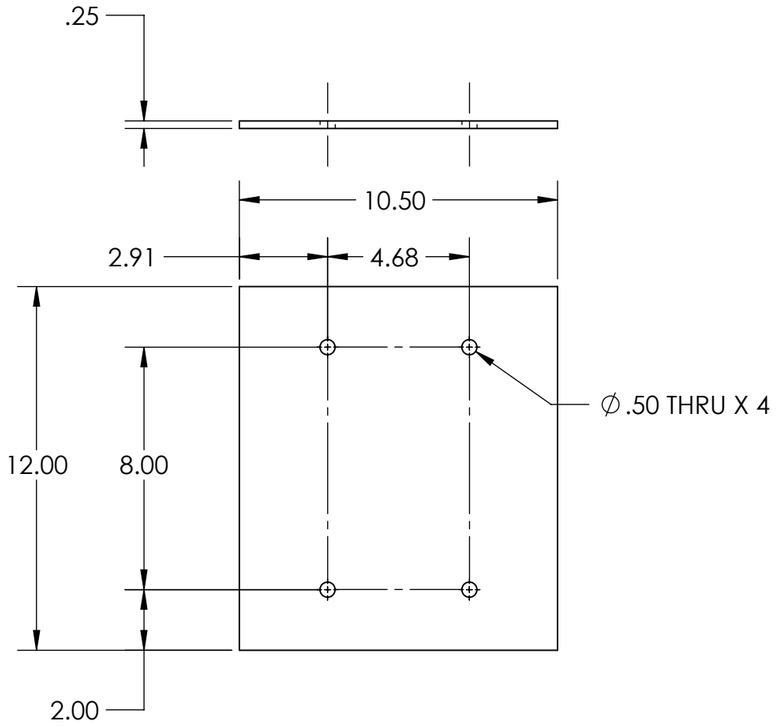

ITEM NO.	PART NUMBER	DESCRIPTION	QTY.
1	1-3-16	0.25" VERTICAL TROLLEY FACEPLATE (FRONT/SHANK)	1

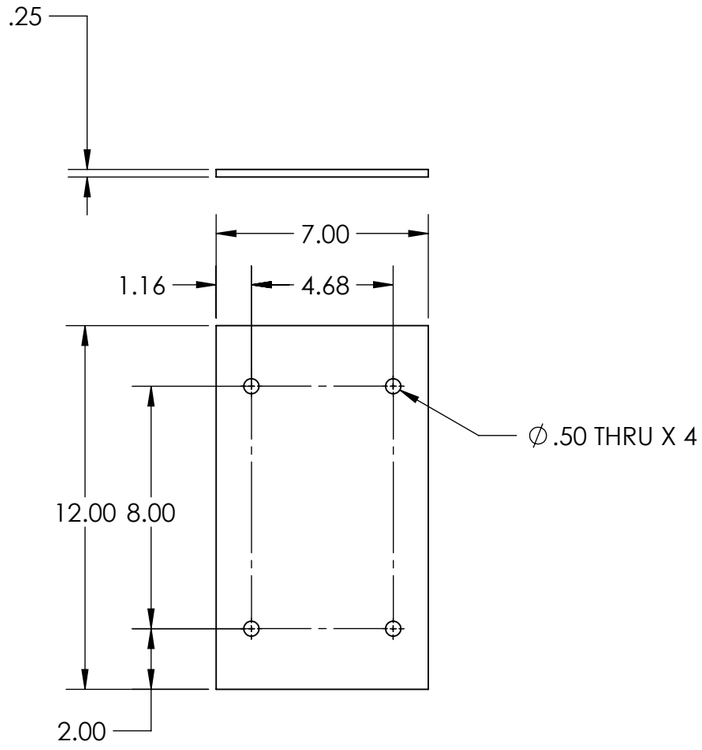

ITEM NO.	PART NUMBER	DESCRIPTION	QTY.
1	1-3-17	0.25" VERTICAL TROLLEY FACEPLATE (REAR)	1

PREPARED FOR MODERN MANUFACTURING LTD.

DIMENSIONAL UNIT: INCHES

N/A = NOT APPLICABLE

UNLESS OTHERWISE SPECIFIED

0.X ± 0.1
0.XX ± 0.06
0.XXX ± 0.030

EDUCATIONAL AND PROPRIETARY
THE INFORMATION CONTAINED IN THIS DRAWING IS FOR EDUCATIONAL USE ONLY, AND **NOT FOR FABRICATION**. CONTENT IS PROPRIETARY AND MAY NOT BE USED WITHOUT THE WRITTEN CONSENT OF THE PROJECT TEAM.

MATERIAL
CSa G40.1-44W

PARENT ASSEMBLY
1-3-0

DO NOT SCALE DRAWING

MECH 4860 - TEAM 19 DESIGN

TITLE:
Vertical Guide
Trolley Faceplates (Front, Back)

SIZE	DWG. NO.	REV
B	1-3-3	0

SCALE: NTS | WEIGHT: N/A | SHEET 1 OF 1

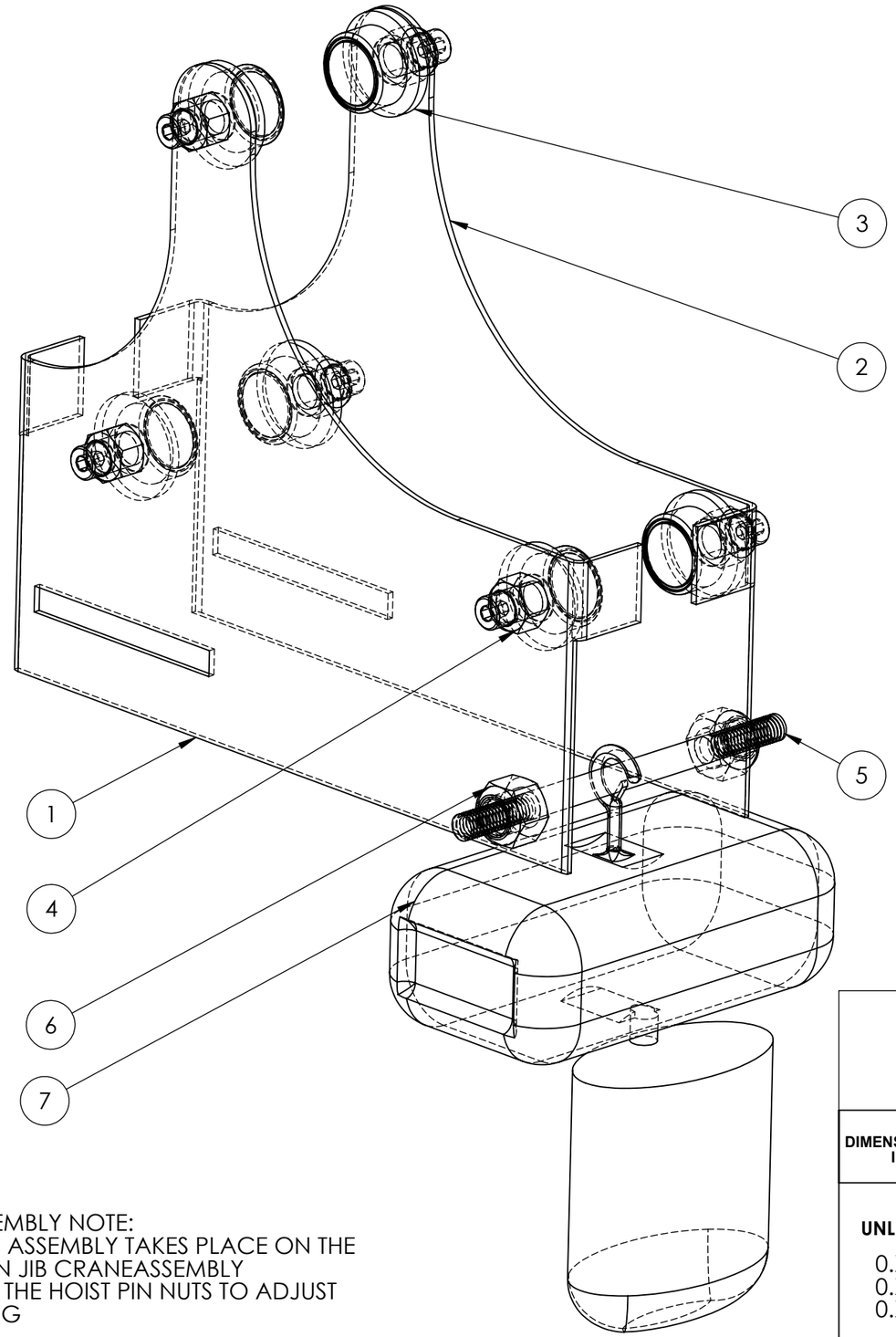

ITEM NO.	PART NUMBER	DESCRIPTION	VENDOR	QTY.	SHEET REFERENCE
1	1-4-01	TROLLEY FRAME PLATE LHS, 0.25" THICKNESS		1	1-4-1
2	1-4-02	TROLLEY FRAME PLATE RHS , 0.25" THICKNESS		1	1-4-1
3	1-4-03	FLANGED TRACK ROLLER	MCMASTER-6318K56	6	
4	1-4-04	1.25"-12 NYLON INSERT LOCKNUT	MCMASTER-97135A113	6	
5	1-4-05	HOIST SUPPORT PIN		1	1-4-2
6	1-4-06	1.0"-6 NYLON INSERT LOCKNUT	MCMASTER-97135A038	2	
7	1-4-07	6600 LB CAPACITY ELECTRIC HOIST	MCMASTER-3316T975	1	

ASSEMBLY NOTE:
-THIS ASSEMBLY TAKES PLACE ON THE MAIN JIB CRANEASSEMBLY
-USE THE HOIST PIN NUTS TO ADJUST SIZING

PREPARED FOR MODERN MANUFACTURING LTD.

DIMENSIONAL UNIT: INCHES

N/A = NOT APPLICABLE

UNLESS OTHERWISE SPECIFIED

0.X ± 0.1
0.XX ± 0.06
0.XXX ± 0.030

EDUCATIONAL AND PROPRIETARY
THE INFORMATION CONTAINED IN THIS DRAWING IS FOR EDUCATIONAL USE ONLY, AND **NOT FOR FABRICATION**. CONTENT IS PROPRIETARY AND MAY NOT BE USED WITHOUT THE WRITTEN CONSENT OF THE PROJECT TEAM.

MATERIAL
MANY

PARENT ASSEMBLY
1-0

DO NOT SCALE DRAWING

MECH 4860 - TEAM 19 DESIGN

TITLE:
Horizontal Trolley Assembly

SIZE **B** | DWG. NO. 1-4-0 | REV 0

SCALE: NTS | WEIGHT: N/A | SHEET 1 OF 1

SOLIDWORKS Educational Product. For Instructional Use Only.

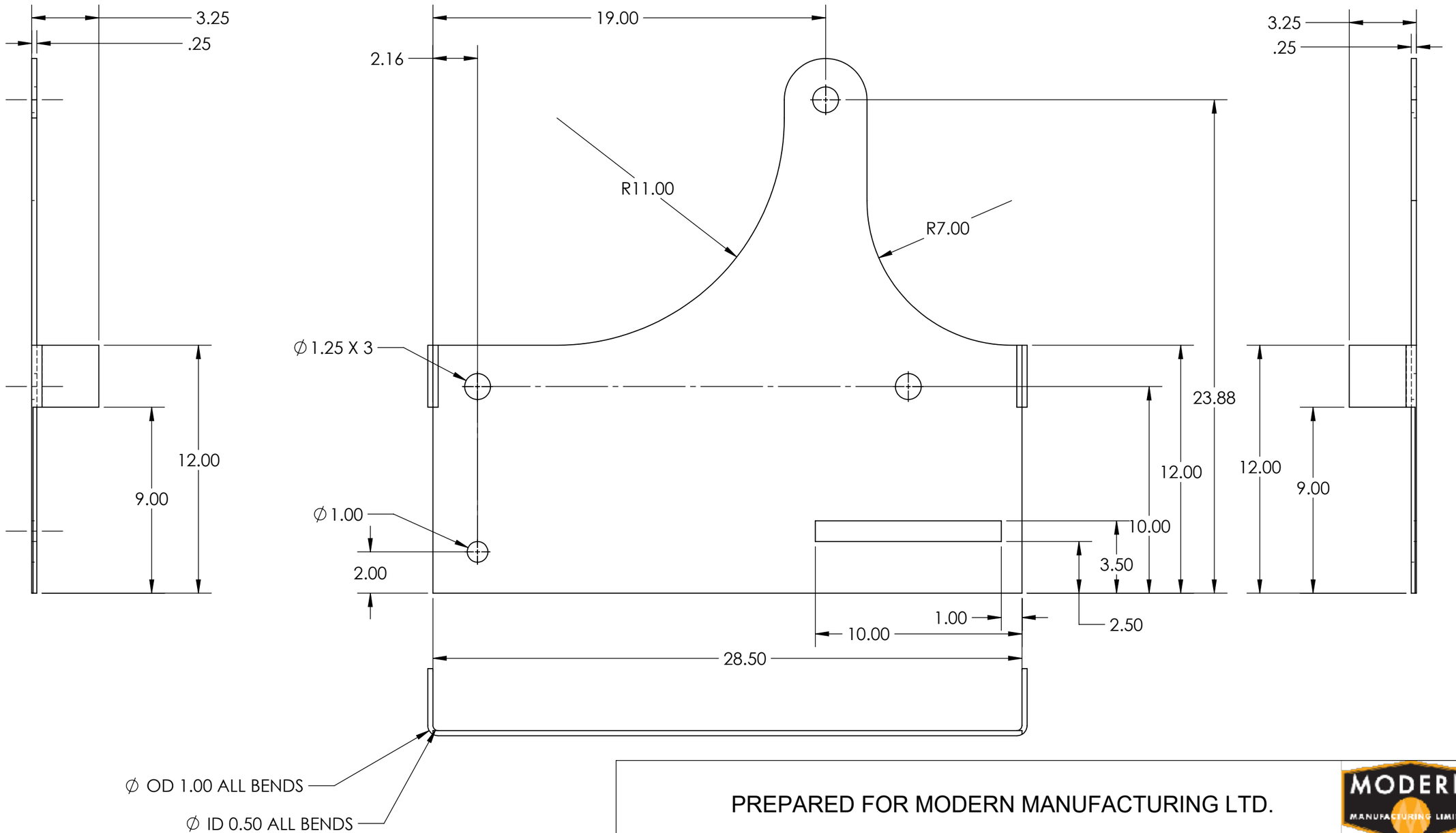

NOTE: PART 1-4-02 IS A MIRROR COMPONENT OF PART 1-4-01

PREPARED FOR MODERN MANUFACTURING LTD.

DIMENSIONAL UNIT: INCHES

N/A = NOT APPLICABLE

UNLESS OTHERWISE SPECIFIED

0.X ± 0.1
0.XX ± 0.06
0.XXX ± 0.030

EDUCATIONAL AND PROPRIETARY

THE INFORMATION CONTAINED IN THIS DRAWING IS FOR EDUCATIONAL USE ONLY, AND **NOT FOR FABRICATION**. CONTENT IS PROPRIETARY AND MAY NOT BE USED WITHOUT THE WRITTEN CONSENT OF THE PROJECT TEAM.

MATERIAL: CSA G40.1-44W

PARENT ASSEMBLY: 1-4-0

DO NOT SCALE DRAWING

MECH 4860 - TEAM 19 DESIGN

TITLE:
HORIZONTAL TROLLEY
TROLLEY FRAMES

SIZE	DWG. NO.	REV
B	1-4-1	0

SCALE: NTS | WEIGHT: N/A | SHEET 1 OF 1

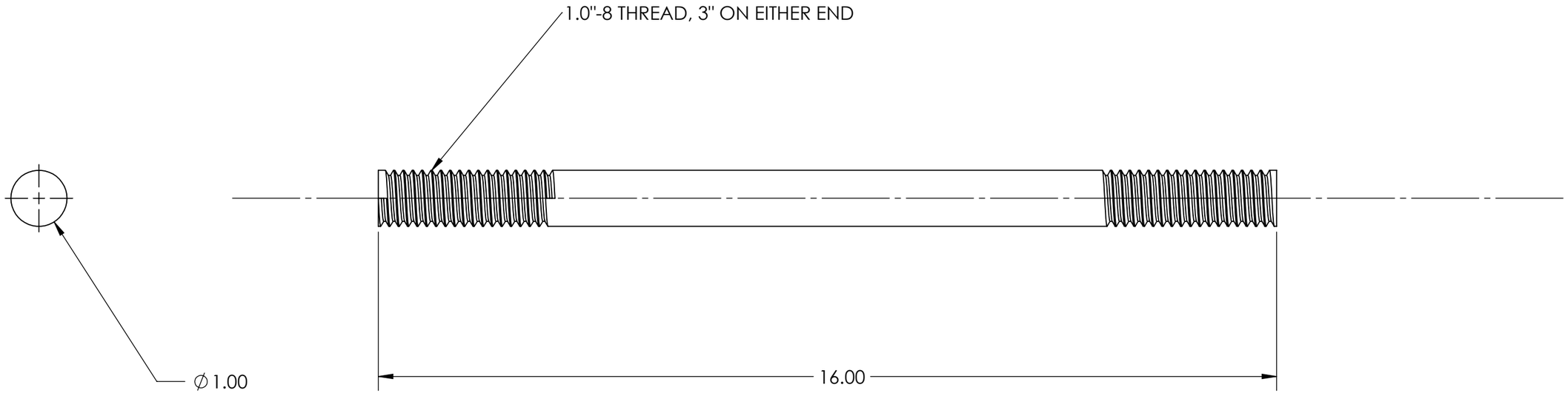

PREPARED FOR MODERN MANUFACTURING LTD.

DIMENSIONAL UNIT: INCHES N/A = NOT APPLICABLE **UNLESS OTHERWISE SPECIFIED** 0.X ± 0.1 0.XX ± 0.06 0.XXX ± 0.030	**EDUCATIONAL AND PROPRIETARY** THE INFORMATION CONTAINED IN THIS DRAWING IS FOR EDUCATIONAL USE ONLY, AND **NOT FOR FABRICATION**. CONTENT IS PROPRIETARY AND MAY NOT BE USED WITHOUT THE WRITTEN CONSENT OF THE PROJECT TEAM. MATERIAL: CSA G40.1-44W PARENT ASSEMBLY: 1-4-0 **DO NOT SCALE DRAWING**	MECH 4860 - TEAM 19 DESIGN TITLE: HORIZONTAL TROLLEY HOIST SUPPORT PIN SIZE: **B** | DWG. NO.: 1-4-2 | REV: 0 SCALE: NTS | WEIGHT: N/A | SHEET 1 OF 1	

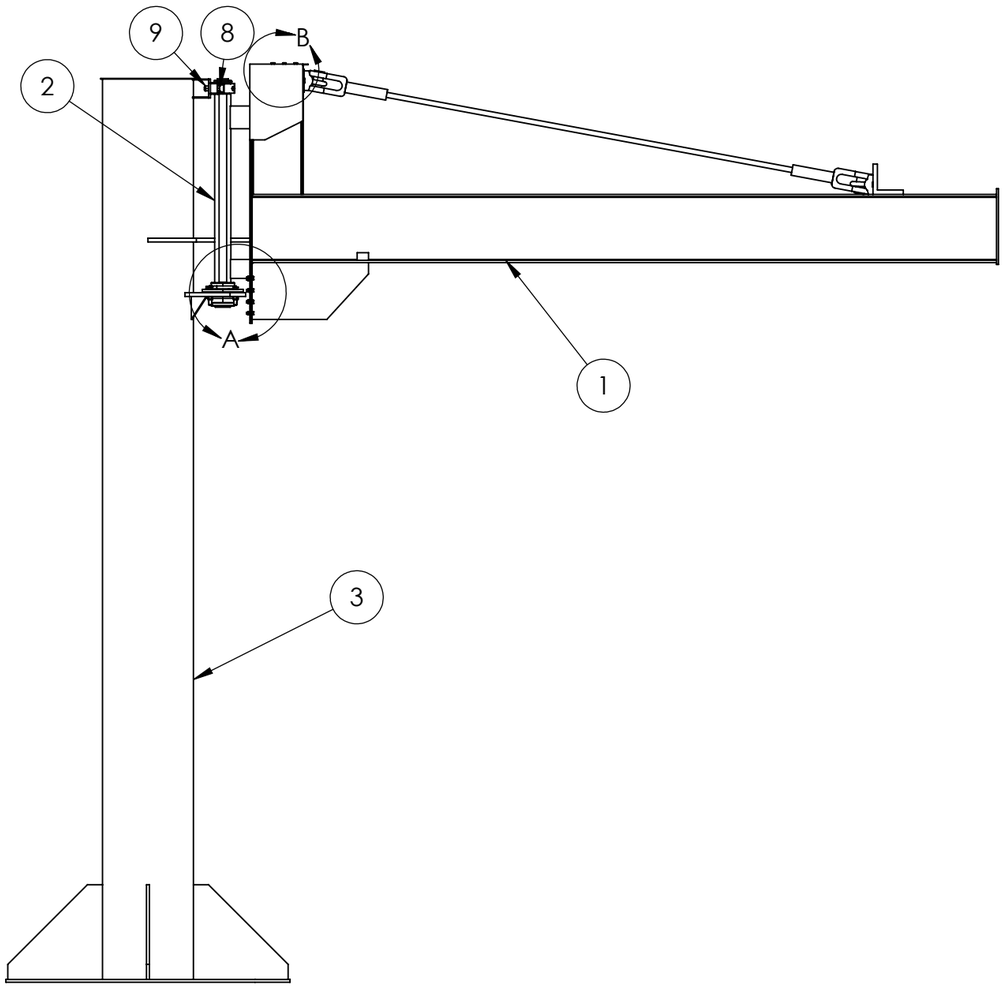

ITEM NO.	PART NUMBER	DESCRIPTION	QTY.	MATERIAL	SHEET REFERENCE	VENDOR
1	1-5-01	HORIZONTAL BEAM ASSEMBLY	1	MANY	1-5-01	-
2	1-5-02	JIB CRANE ROTATION ASSEMBLY	1	MANY	1-5-02	-
3	1-5-03	MAST COLUMN ASSEMBLY	1	CSA G40.21-44W	1-5-03	-
4	1-5-04	0.75"-10 x 4.25" LG HEX HD BOLT	4	GRADE 8	MCMASTER P/N 91257A200	MCMASTER CARR
5	1-5-05	0.75"-10 NYLOCK NUT	4	GRADE 8	MCMASTER P/N 97135A280	MCMASTER CARR
6	1-5-07	0.5"-13 NYLOCK NUT	14	GRADE 8	MCMASTER P/N 97135A250	MCMASTER CARR
7	1-5-08	0.5-13" x 1.5" LG HEX HD BOLT	8	GRADE 8	MCMASTER P/N 92620A716	MCMASTER CARR
8	1-5-09	0.875"-9 x 3.5" LG HEX HD BOLT	2	GRADE 8	MCMASTER P/N 91257A915	MCMASTER CARR
9	1-5-10	0.875"-9 NYLOCK NUT	2	GRADE 8	MCMASTER P/N 90630A114	MCMASTER CARR
10	1-5-11	0.5"-13 x 1.25" LG HEX HD BOLT	6	GRADE 8	MCMASTER P/N 92620A714	MCMASTER CARR

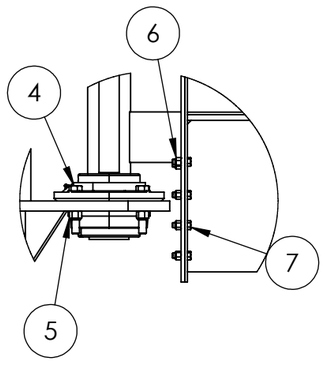

DETAIL A
SCALE 1 : 15

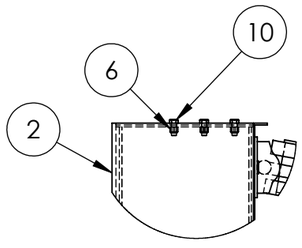

DETAIL B
SCALE 1 : 15

PREPARED FOR MODERN MANUFACTURING LTD.

DIMENSIONAL UNIT: INCHES

N/A = NOT APPLICABLE

UNLESS OTHERWISE SPECIFIED

0.X ± 0.1
0.XX ± 0.06
0.XXX ± 0.030

EDUCATIONAL AND PROPRIETARY
THE INFORMATION CONTAINED IN THIS DRAWING IS FOR EDUCATIONAL USE ONLY, AND **NOT FOR FABRICATION**. CONTENT IS PROPRIETARY AND MAY NOT BE USED WITHOUT THE WRITTEN CONSENT OF THE PROJECT TEAM.

MATERIAL
MANY

PARENT ASSEMBLY
1-0

DO NOT SCALE DRAWING

MECH 4860 - TEAM 19 DESIGN

TITLE:
ARTICULATING JIG
JIB CRANE

SIZE	DWG. NO.	REV
B	1-5	0

SCALE: 1:40 | WEIGHT: N/A | SHEET 1 OF 1

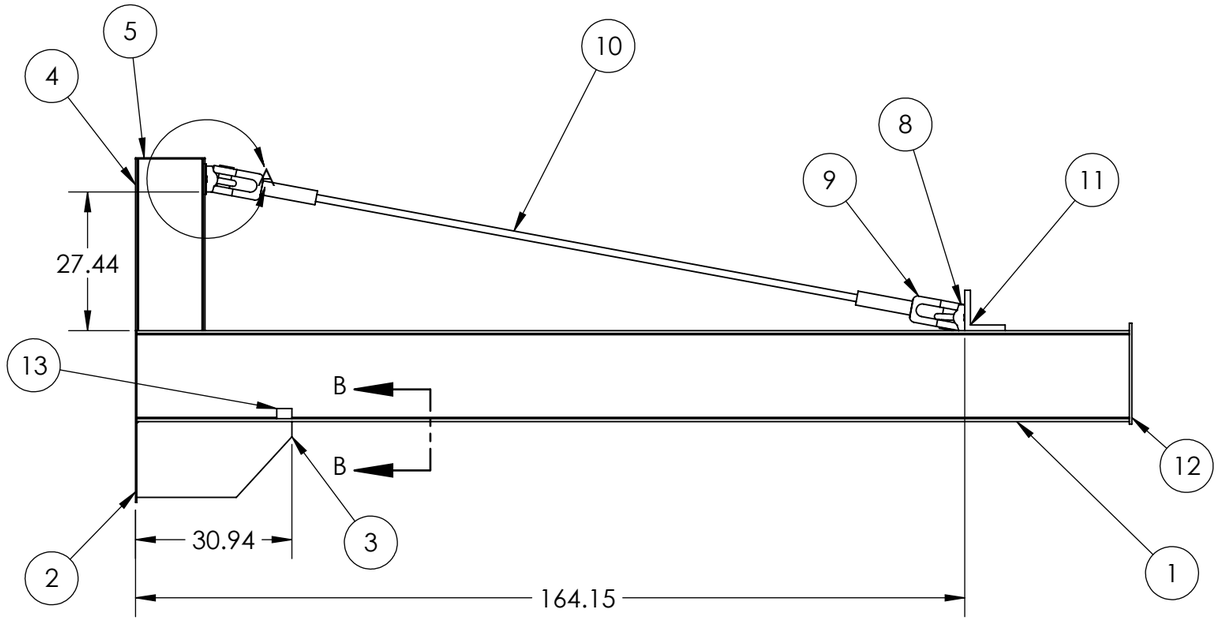

ITEM NO.	PART NUMBER	DESCRIPTION	QTY.	VENDOR	SHEET REFERENCE
1	1-5-01-01	W18 x 50 x 196.50" LG	1	-	-
2	1-5-01-02	34.00" x 14.00" x 0.125" PLATE	1	-	-
3	1-5-01-03	30.69" x 15.00" x 0.68" PLATE	2	-	1-5-01-01
4	1-5-01-04	W14 x 22 BEAM x 34.00" LG	1	-	-
5	1-5-01-05	13.75" x 5.00" x .19" PLATE	1	-	1-5-01-01
6	1-5-01-07	12.00" x 6.00" x .25" PLATE	1	-	-
7	1-5-01-08	16T WELD-ON LOAD RING	1	YOKE	YOKE P/N 8-082-16
8	1-5-01-06	16T WELD-ON LOAD RING	1	YOKE	YOKE P/N 8-082-16
9	1-5-01-09	36 mm SWAGED WIRE ROPE SOCKET	2	YOKE	YOKE P/N 8-730-36
10	1-5-01-10	36 mm WIRE ROPE x 132.00" LG	1	-	-
11	1-5-01-11	8.00" x 8.00" x 10.50" LG ANGLE	1	-	-
12	1-5-01-12	20.00" x 12.00" x 0.50" PLATE	1	-	-
13	1-5-01-13	3.00" x 2.00" x 2.00" PLATE	2	-	-

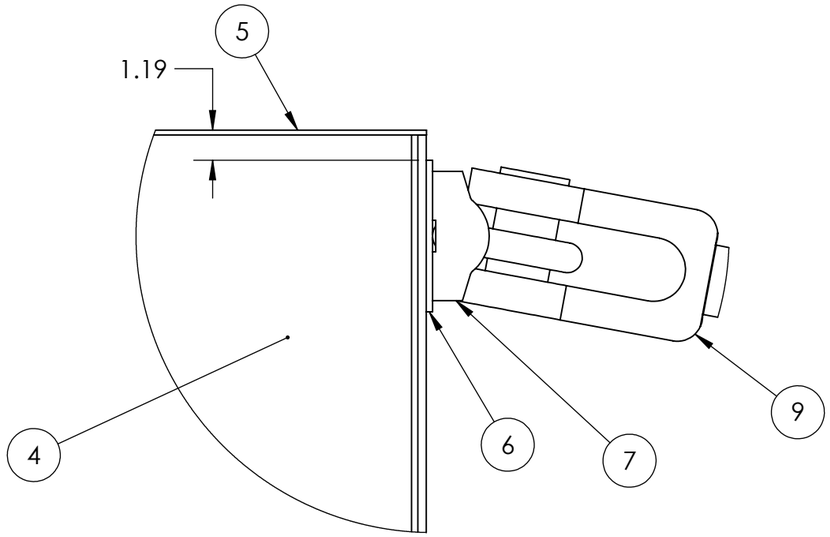

DETAIL A
SCALE 1 : 6

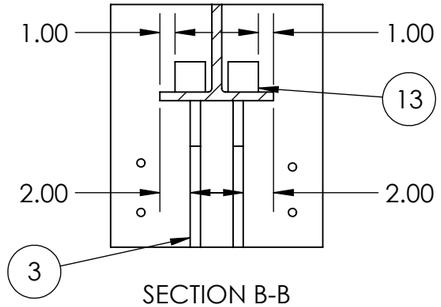

SECTION B-B
SCALE 1 : 10

PREPARED FOR MODERN MANUFACTURING LTD.

DIMENSIONAL UNIT: INCHES

N/A = NOT APPLICABLE

UNLESS OTHERWISE SPECIFIED

0.X ± 0.1
0.XX ± 0.06
0.XXX ± 0.030

EDUCATIONAL AND PROPRIETARY
THE INFORMATION CONTAINED IN THIS DRAWING IS FOR EDUCATIONAL USE ONLY, AND **NOT FOR FABRICATION**. CONTENT IS PROPRIETARY AND MAY NOT BE USED WITHOUT THE WRITTEN CONSENT OF THE PROJECT TEAM.

MATERIAL: MANY

PARENT ASSEMBLY: 1-5

DO NOT SCALE DRAWING

MECH 4860 - TEAM 19 DESIGN

TITLE:
JIB CRANE
HORIZONTAL BEAM

SIZE: **B** | DWG. NO.: 1-5-01 | REV: 0

SCALE: MANY | WEIGHT: N/A | SHEET 1 OF 2

NOTE: SEE YOKE WELDING SPECIFICATION FOR LIFTING RINGS FOR WELD PROCEDURE

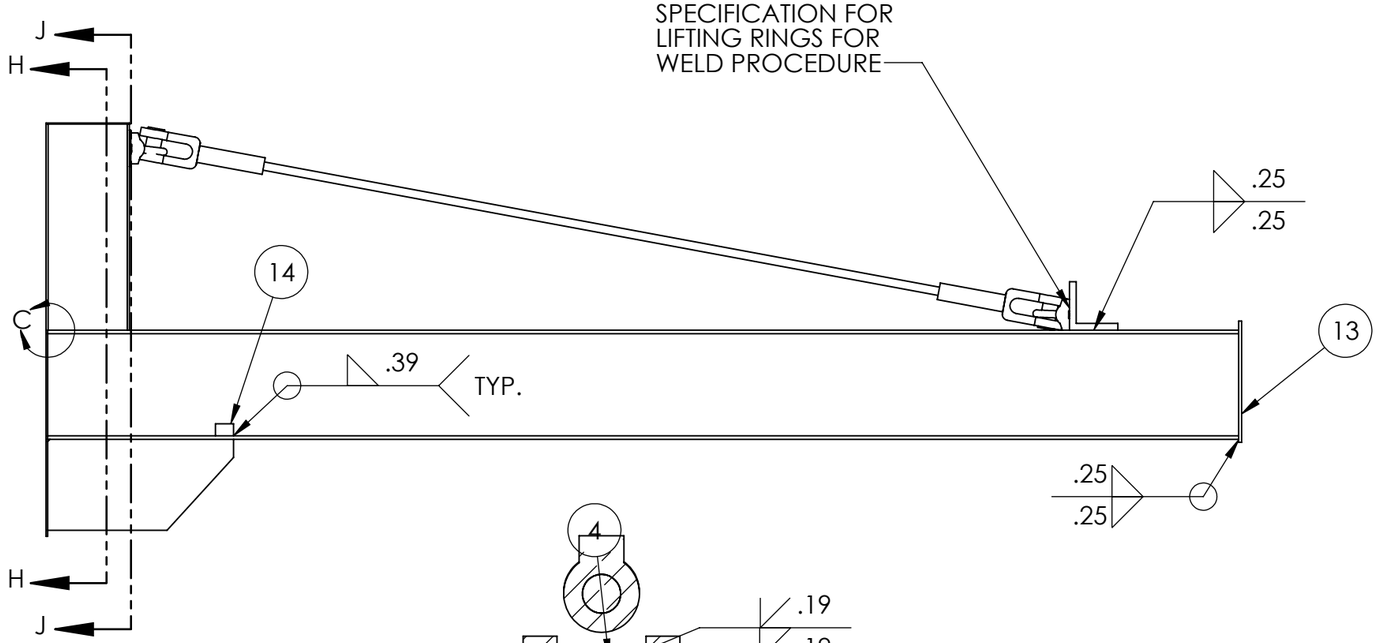

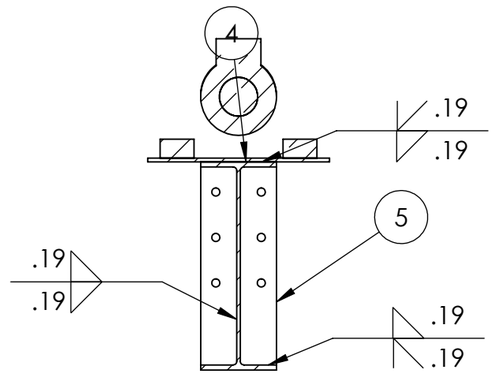

SECTION M-M
SCALE 1 : 10

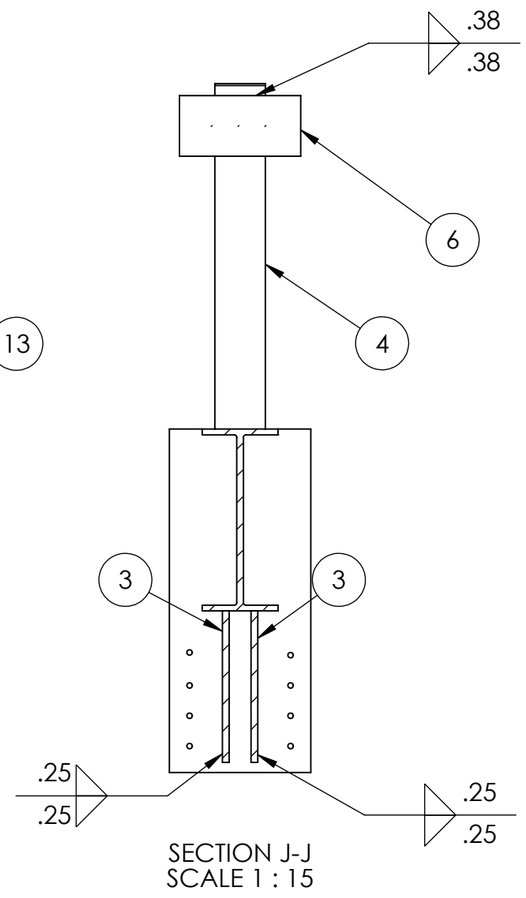

SECTION J-J
SCALE 1 : 15

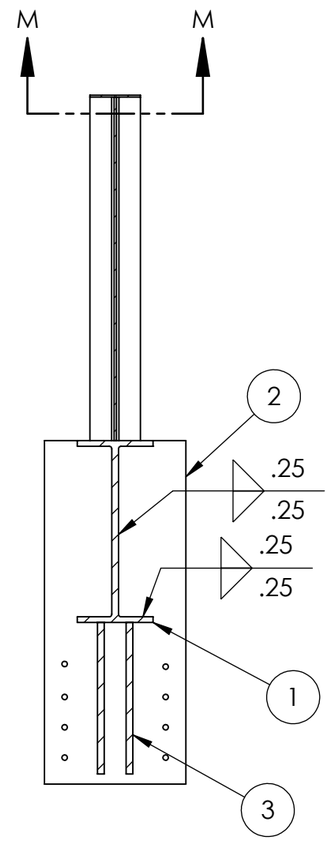

SECTION H-H
SCALE 1 : 15

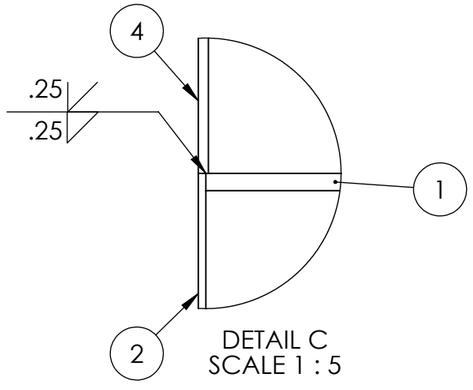

DETAIL C
SCALE 1 : 5

PREPARED FOR MODERN MANUFACTURING LTD.

DIMENSIONAL UNIT: INCHES

N/A = NOT APPLICABLE

UNLESS OTHERWISE SPECIFIED

0.X ± 0.1
0.XX ± 0.06
0.XXX ± 0.030

EDUCATIONAL AND PROPRIETARY
THE INFORMATION CONTAINED IN THIS DRAWING IS FOR EDUCATIONAL USE ONLY, AND **NOT FOR FABRICATION**. CONTENT IS PROPRIETARY AND MAY NOT BE USED WITHOUT THE WRITTEN CONSENT OF THE PROJECT TEAM.

MATERIAL
MANY

PARENT ASSEMBLY
1-5

DO NOT SCALE DRAWING

MECH 4860 - TEAM 19 DESIGN

TITLE:
JIB CRANE
HORIZONTAL BEAM

SIZE
B

DWG. NO.
1-5-01

REV
0

SCALE: 1:48

WEIGHT: N/A

SHEET 2 OF 2

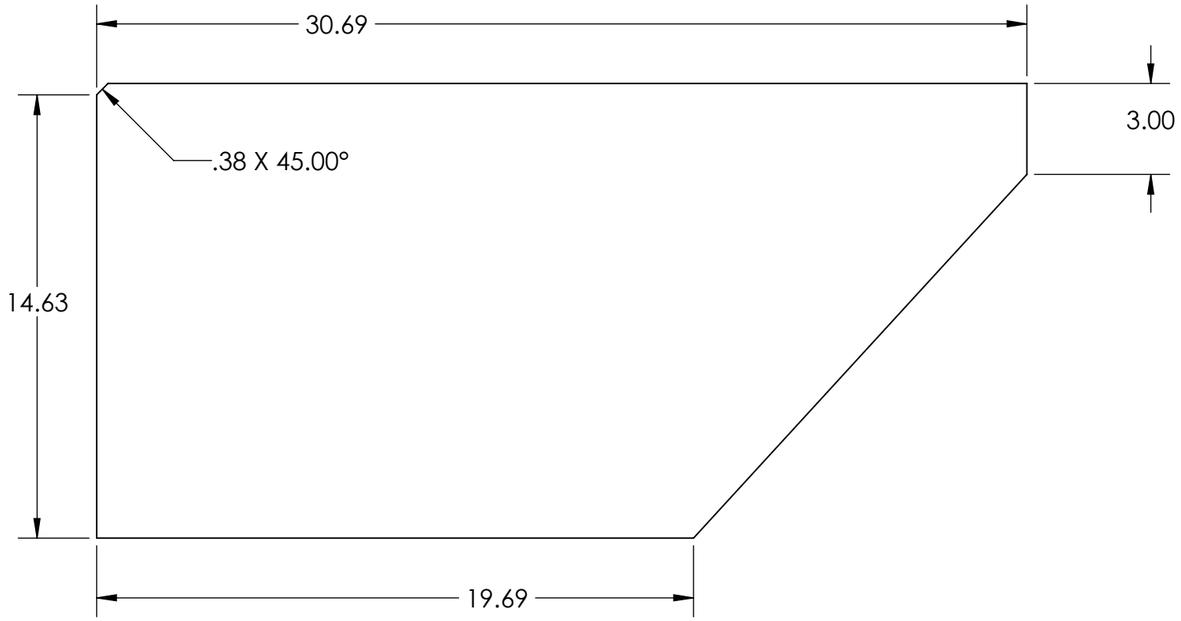

PART NUMBER	DESCRIPTION	NOTE
1-5-01-03	30.69" x 15.00" x 0.68" PLATE	DXF INCLUDED

PART NUMBER	DESCRIPTION	NOTE
1-5-01-05	13.75" x 5.00" x .19" PLATE	DXF INCLUDED

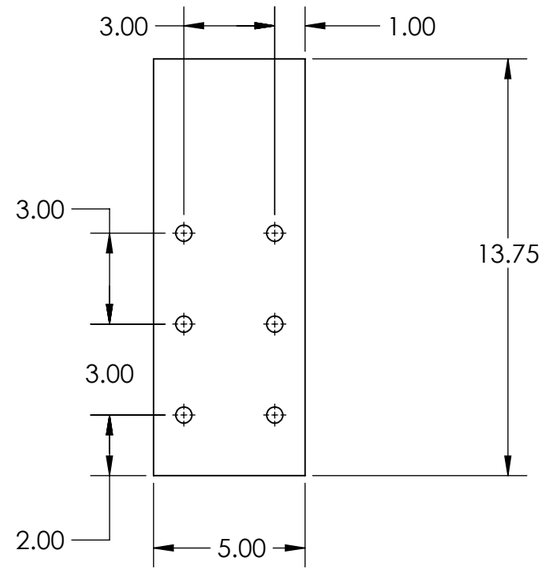

PREPARED FOR MODERN MANUFACTURING LTD.

DIMENSIONAL UNIT: INCHES

N/A = NOT APPLICABLE

UNLESS OTHERWISE SPECIFIED

0.X ± 0.1
0.XX ± 0.06
0.XXX ± 0.030

EDUCATIONAL AND PROPRIETARY

THE INFORMATION CONTAINED IN THIS DRAWING IS FOR EDUCATIONAL USE ONLY, AND **NOT FOR FABRICATION**. CONTENT IS PROPRIETARY AND MAY NOT BE USED WITHOUT THE WRITTEN CONSENT OF THE PROJECT TEAM.

MATERIAL
CAS G40.21-44W

PARENT ASSEMBLY
1-5-01

DO NOT SCALE DRAWING

MECH 4860 - TEAM 19 DESIGN

TITLE:
HORIZONTAL BEAM
COMPONENTS

SIZE	DWG. NO.	REV
B	1-5-01-01	0

SCALE: 1:5 | WEIGHT: N/A | SHEET 1 OF 1

ITEM NO.	PART NUMBER	DESCRIPTION	QTY.	MATERIAL	SHEET REFERENCE	VENDOR
1	1-5-02-01	15.00" x 14.00" x 0.19" PLATE	1	CSA G40.21-44W	1-5-02-01	-
2	1-5-02-02	68.38" x 14.00" x 0.38" PLATE	1	CSA G40.21-44W	1-5-02-01	-
3	1-5-02-03	20.00" x 14.00" x 0.13" PLATE	2	CSA G40.21-44W	1-5-02-01	-
4	1-5-02-04	4.25" DIA x 60.25" LG ROUND	1	1020 STEEL	1-5-02-02	-
5	1-5-02-07	P2B-S2-215RE ROLLER BEARING W/ PILLOW BLOCK HOUSING	1	-		BALDOR-DODGE
6	1-5-02-08	FC-E-315R TAPERED ROLLER BEARING W/ FLANGED HOUSING	1	-		BALDOR-DODGE
7	1-5-02-09	2.00" x 1.25" x 49.63" BAR	2	CSA G40.21-44W	1-5-02-01	-

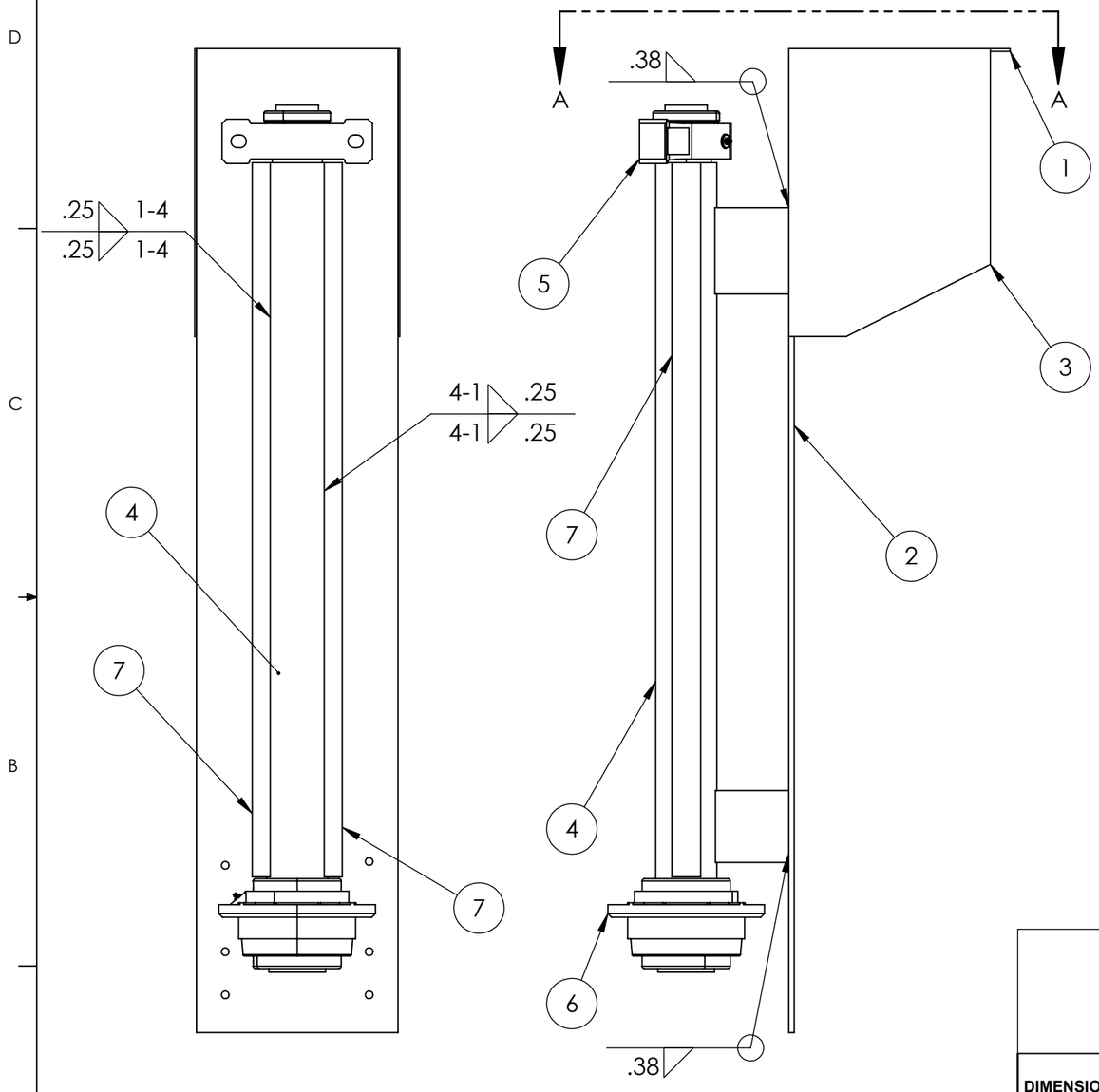

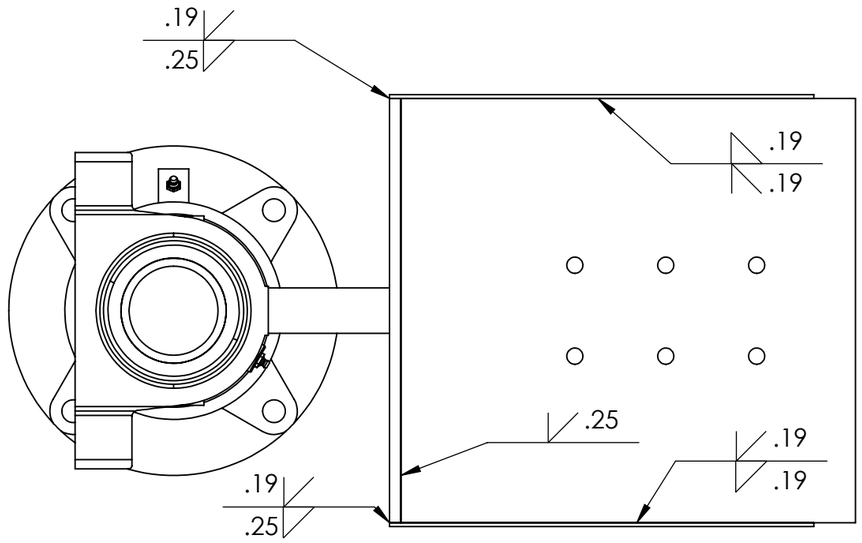

SECTION A-A
SCALE 1 : 5

PREPARED FOR MODERN MANUFACTURING LTD.

DIMENSIONAL UNIT: INCHES

N/A = NOT APPLICABLE

UNLESS OTHERWISE SPECIFIED

0.X ± 0.1
0.XX ± 0.06
0.XXX ± 0.030

EDUCATIONAL AND PROPRIETARY
THE INFORMATION CONTAINED IN THIS DRAWING IS FOR EDUCATIONAL USE ONLY, AND **NOT FOR FABRICATION**. CONTENT IS PROPRIETARY AND MAY NOT BE USED WITHOUT THE WRITTEN CONSENT OF THE PROJECT TEAM.

MATERIAL: MANY

PARENT ASSEMBLY: 1-05

DO NOT SCALE DRAWING

MECH 4860 - TEAM 19 DESIGN

TITLE:
JIB CRANE
ROTATION MECHANISM

SIZE: B | DWG. NO.: 1-5-02 | REV: 0

SCALE: 1:10 | WEIGHT: N/A | SHEET 1 OF 1

PART NUMBER	DESCRIPTION	MATERIAL	NOTE
1-5-02-03	20.00" x 14.00" x 0.13" PLATE	CSA G40.21-44W	DXF INCLUDED

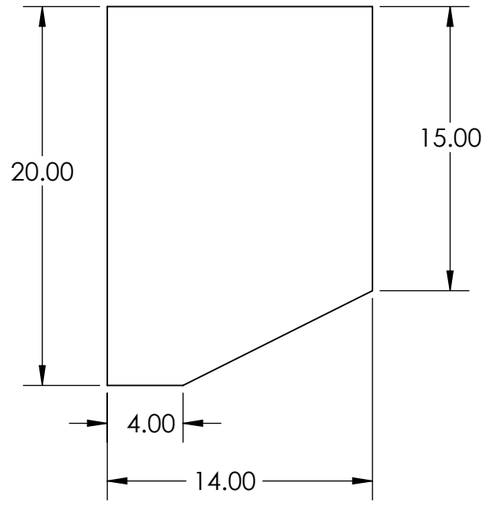

PART NUMBER	DESCRIPTION	MATERIAL	NOTE
1-5-02-02	68.38" x 14.00" x 0.38" PLATE	CSA G40.21-44W	DXF INCLUDED

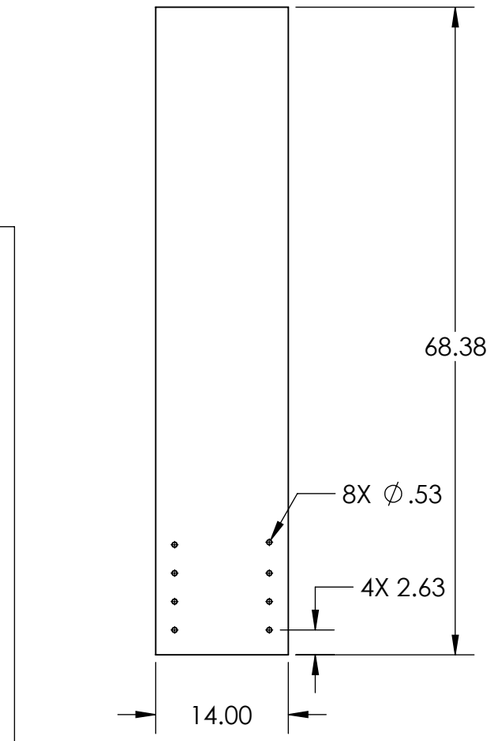

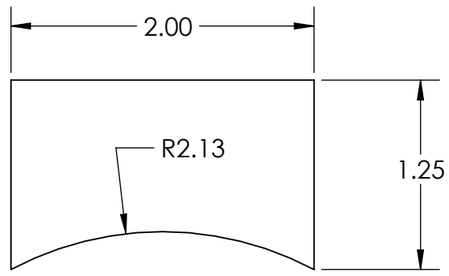

PART NUMBER	DESCRIPTION	MATERIAL	NOTE
1-05-02-09	2.00" x 1.25" x 49.63" BAR	CSA G40.21-44W	-

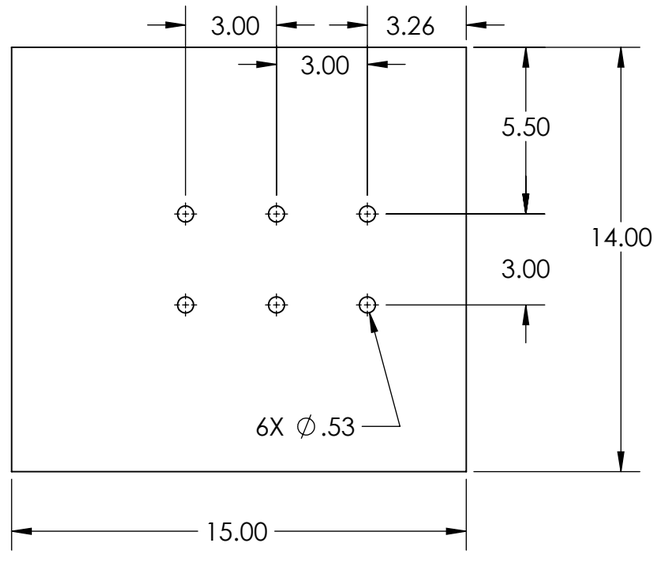

PART NUMBER	DESCRIPTION	MATERIAL	NOTE
1-5-02-01	15.00" x 14.00" x 0.19" PLATE	CSA G40.21-44W	DXF INCLUDED

PREPARED FOR MODERN MANUFACTURING LTD.

DIMENSIONAL UNIT: INCHES

N/A = NOT APPLICABLE

UNLESS OTHERWISE SPECIFIED

0.X ± 0.1
0.XX ± 0.06
0.XXX ± 0.030

EDUCATIONAL AND PROPRIETARY

THE INFORMATION CONTAINED IN THIS DRAWING IS FOR EDUCATIONAL USE ONLY, AND **NOT FOR FABRICATION**. CONTENT IS PROPRIETARY AND MAY NOT BE USED WITHOUT THE WRITTEN CONSENT OF THE PROJECT TEAM.

MATERIAL: CSA G40.21-44W

PARENT ASSEMBLY: 1-5-02

DO NOT SCALE DRAWING

MECH 4860 - TEAM 19 DESIGN

TITLE:
JIB CRANE ROTATION
COMPONENT DETAILS

SIZE: **B** | DWG. NO. 1-5-02-01 | REV 0

SCALE: MANY | WEIGHT: N/A | SHEET 1 OF 1

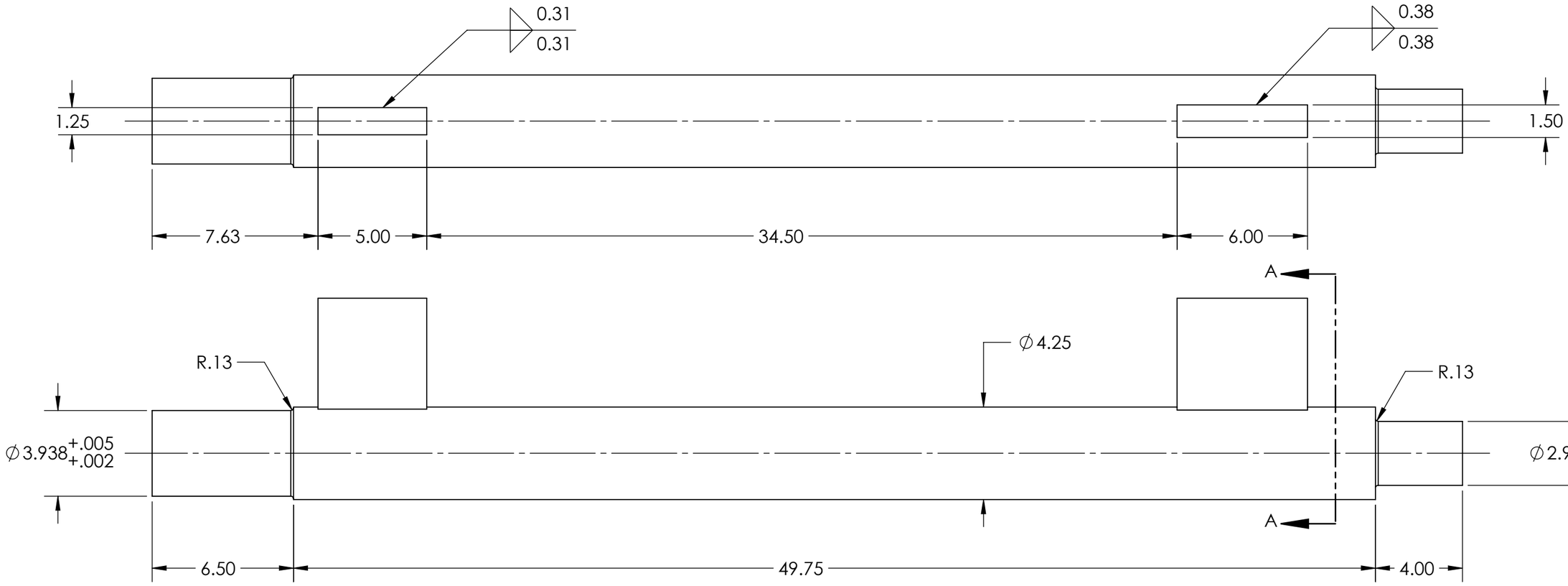

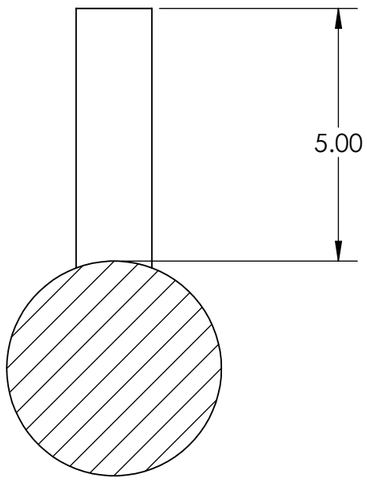

SECTION A-A
SCALE 1 : 3

PREPARED FOR MODERN MANUFACTURING LTD.

DIMENSIONAL UNIT: INCHES

N/A = NOT APPLICABLE

UNLESS OTHERWISE SPECIFIED

0.X ± 0.1
0.XX ± 0.06
0.XXX ± 0.030

EDUCATIONAL AND PROPRIETARY
THE INFORMATION CONTAINED IN THIS DRAWING IS FOR EDUCATIONAL USE ONLY, AND **NOT FOR FABRICATION**. CONTENT IS PROPRIETARY AND MAY NOT BE USED WITHOUT THE WRITTEN CONSENT OF THE PROJECT TEAM.

MATERIAL
1020

PARENT ASSEMBLY
1-5-02

DO NOT SCALE DRAWING

MECH 4860 - TEAM 19 DESIGN

TITLE:
ROTATION MECHANISM
PIVOT SHAFT

SIZE	DWG. NO.	REV
B	1-5-02-02	0

SCALE: MANY | WEIGHT: N/A | SHEET 1 OF 1

ITEM NO.	PART NUMBER	DESCRIPTION	QTY.	SHEET REFERENCE
1	1-5-03-01	24" SCH 80 PIPE x 237.68" LG	1	-
2	1-5-03-02	4.00" x 5.00" x 1.00" PLATE	1	-
3	1-5-03-03	12.00" x 5.00" x .50" PLATE	1	1-5-03-01
4	1-5-03-04	14.00" x 16.00" x1.00" PLATE	1	1-5-03-01
5	1-5-03-05	6.00" x 4.00" x 1.00" PLATE	2	1-5-03-01
6	1-5-03-06	4.25" x 2.00" x .25" PLATE	4	1-5-03-01
7	1-5-03-07	25.00" DIA. x .13" PLATE	1	-
8	1-5-03-09	75.00" DIA x .75" PLATE	1	-
9	1-5-03-08	25.00" x 25.00" x .75" PLATE	4	1-5-03-01
10	1-5-03-10	36.00" x 14.00" x 1.00" PLATE	1	1-5-03-02
11	1-5-03-11	12.75" x 8.00" x 1.00" PLATE	1	1-5-03-02

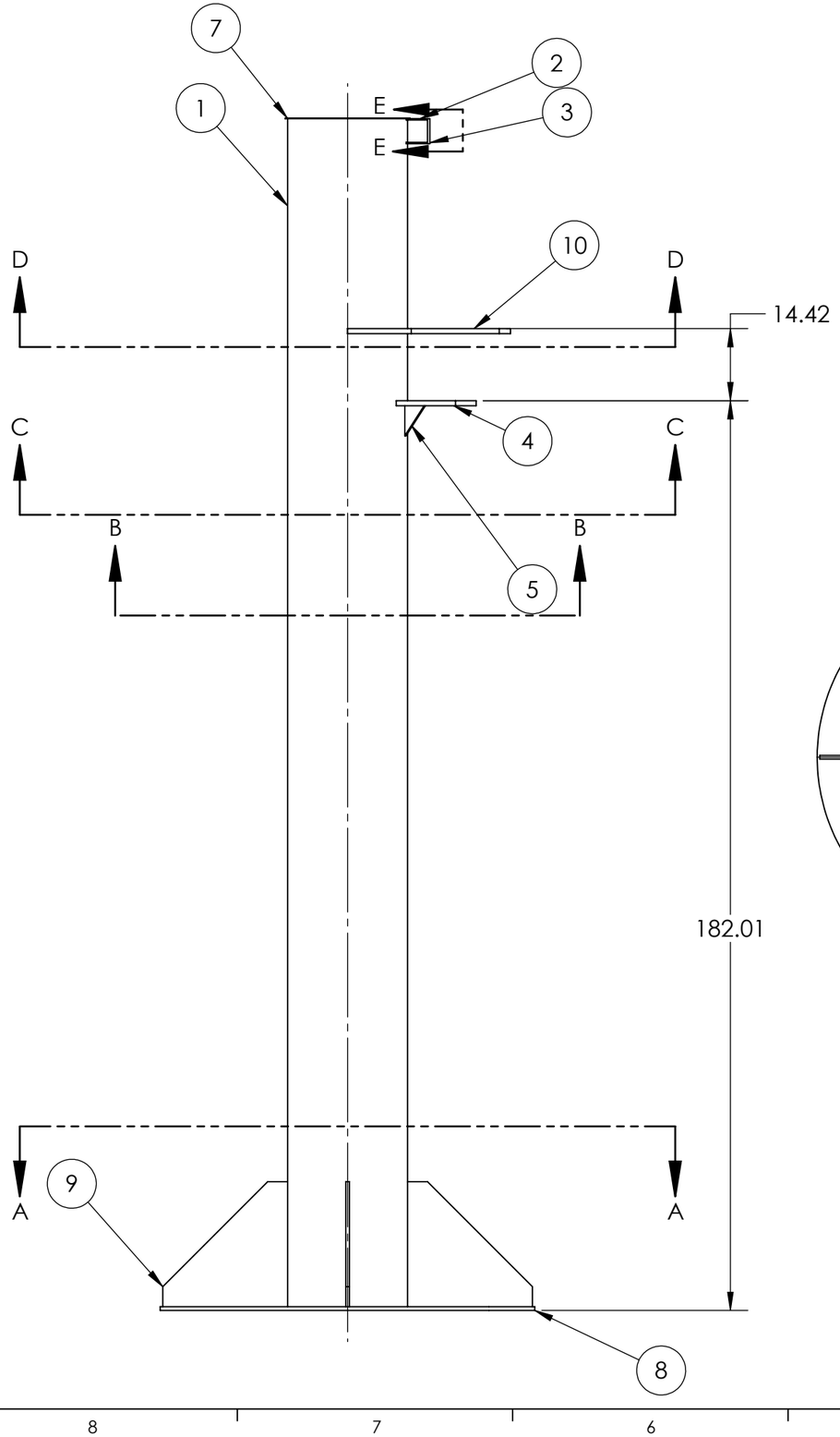

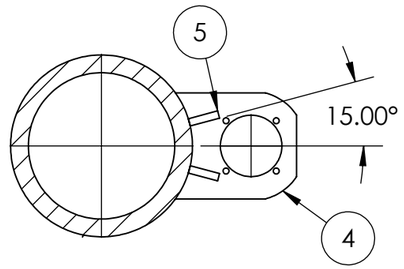

SECTION B-B
SCALE 1 : 20

SECTION A-A
SCALE 1 : 28

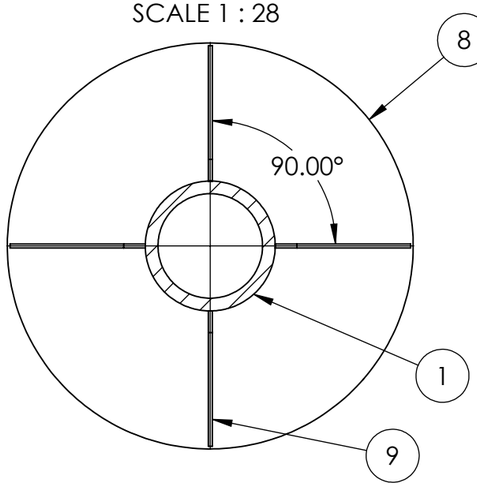

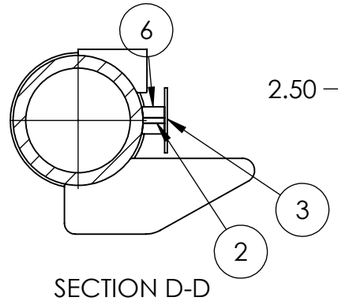

SECTION D-D
SCALE 1 : 28

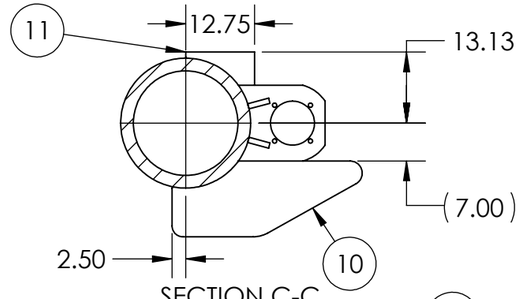

SECTION C-C
SCALE 1 : 28

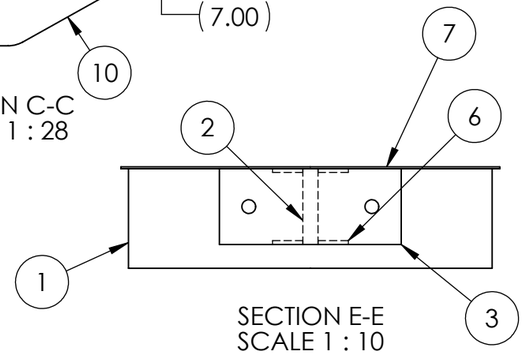

SECTION E-E
SCALE 1 : 10

PREPARED FOR MODERN MANUFACTURING LTD.

DIMENSIONAL UNIT: INCHES

N/A = NOT APPLICABLE

UNLESS OTHERWISE SPECIFIED

0.X ± 0.1
0.XX ± 0.06
0.XXX ± 0.030

EDUCATIONAL AND PROPRIETARY
THE INFORMATION CONTAINED IN THIS DRAWING IS FOR EDUCATIONAL USE ONLY, AND **NOT FOR FABRICATION**. CONTENT IS PROPRIETARY AND MAY NOT BE USED WITHOUT THE WRITTEN CONSENT OF THE PROJECT TEAM.

MATERIAL
CSA G40.21-44W

PARENT ASSEMBLY
1-5

DO NOT SCALE DRAWING

MECH 4860 - TEAM 19 DESIGN

TITLE:
JIB CRANE
MAST COLUMN

SIZE **B** | DWG. NO. 1-5-03 | REV 0

SCALE: MANY | WEIGHT: N/A | SHEET 1 OF 1

PART NUMBER	DESCRIPTION	NOTE
1-5-03-03	12.00" x 5.00" x .50" PLATE	DXF INCLUDED

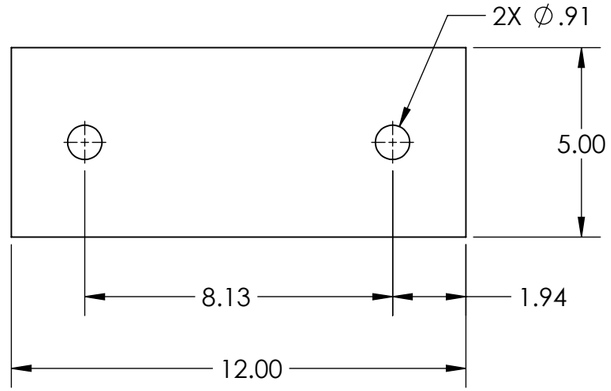

PART NUMBER	DESCRIPTION	NOTE
1-5-03-05	6.00" x 4.00" x 1.00" PLATE	DXF INCLUDED

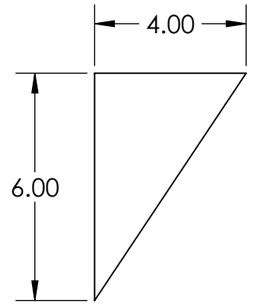

PART NUMBER	DESCRIPTION	NOTE
1-5-03-06	4.25" x 2.00" x .25" PLATE	DXF INCLUDED

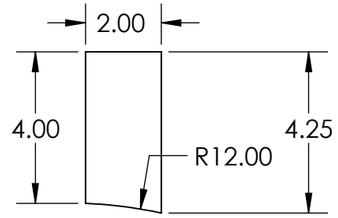

PART NUMBER	DESCRIPTION	NOTE
1-5-03-04	14.00" x 16.00" x1.00" PLATE	DXF INCLUDED

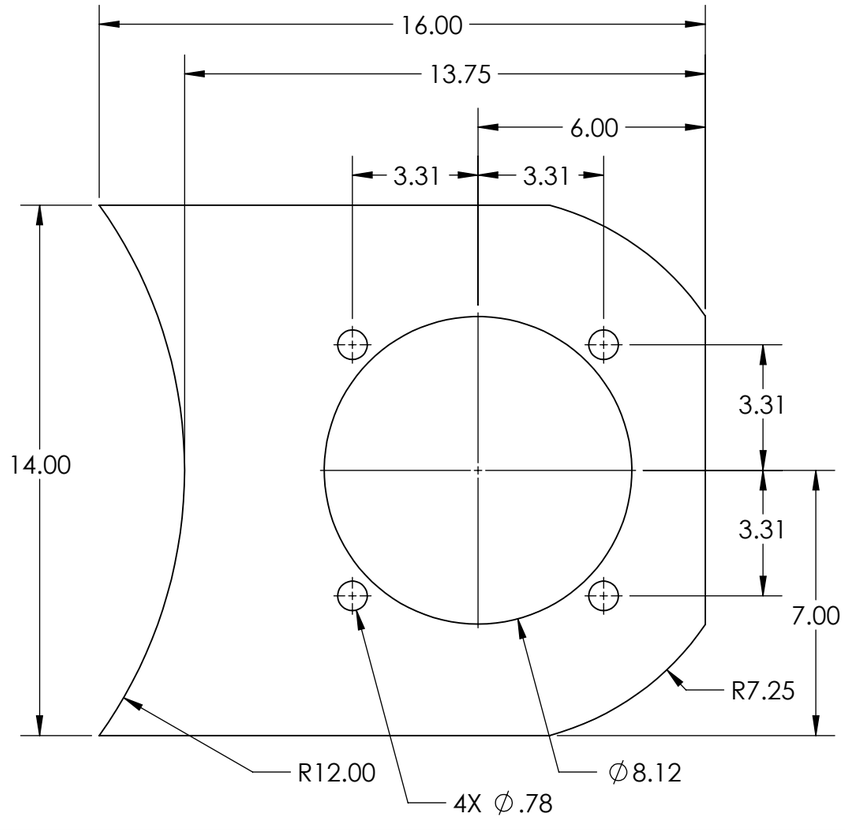

PART NUMBER	DESCRIPTION	NOTE
1-5-03-08	25.00" x 25.00" x .75" PLATE	DXF INCLUDED

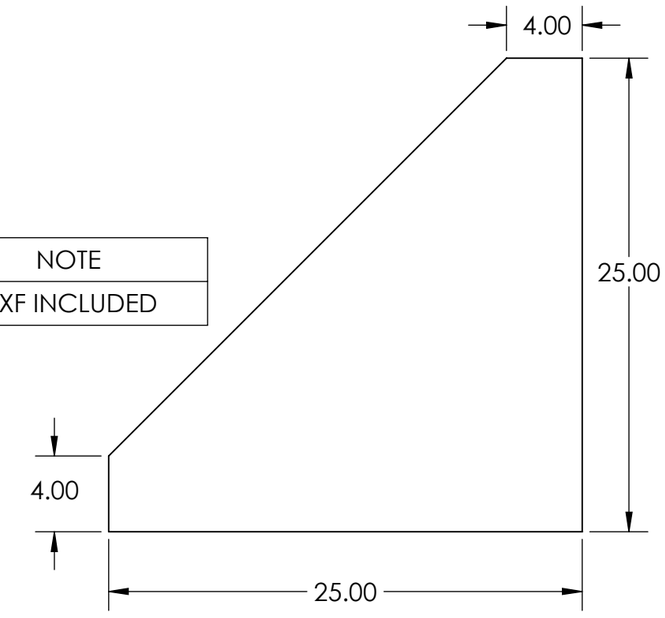

PREPARED FOR MODERN MANUFACTURING LTD.

DIMENSIONAL UNIT: INCHES

N/A = NOT APPLICABLE

UNLESS OTHERWISE SPECIFIED

0.X ± 0.1
0.XX ± 0.06
0.XXX ± 0.030

EDUCATIONAL AND PROPRIETARY

THE INFORMATION CONTAINED IN THIS DRAWING IS FOR EDUCATIONAL USE ONLY, AND **NOT FOR FABRICATION**. CONTENT IS PROPRIETARY AND MAY NOT BE USED WITHOUT THE WRITTEN CONSENT OF THE PROJECT TEAM.

MATERIAL: CSA G40.21-44W

PARENT ASSEMBLY: 1-5-03

DO NOT SCALE DRAWING

MECH 4860 - TEAM 19 DESIGN

TITLE: MAST COLUMN COMPONENTS

SIZE: B | DWG. NO.: 1-5-03-01 | REV: 0

SCALE: MANY | WEIGHT: N/A | SHEET 1 OF 1

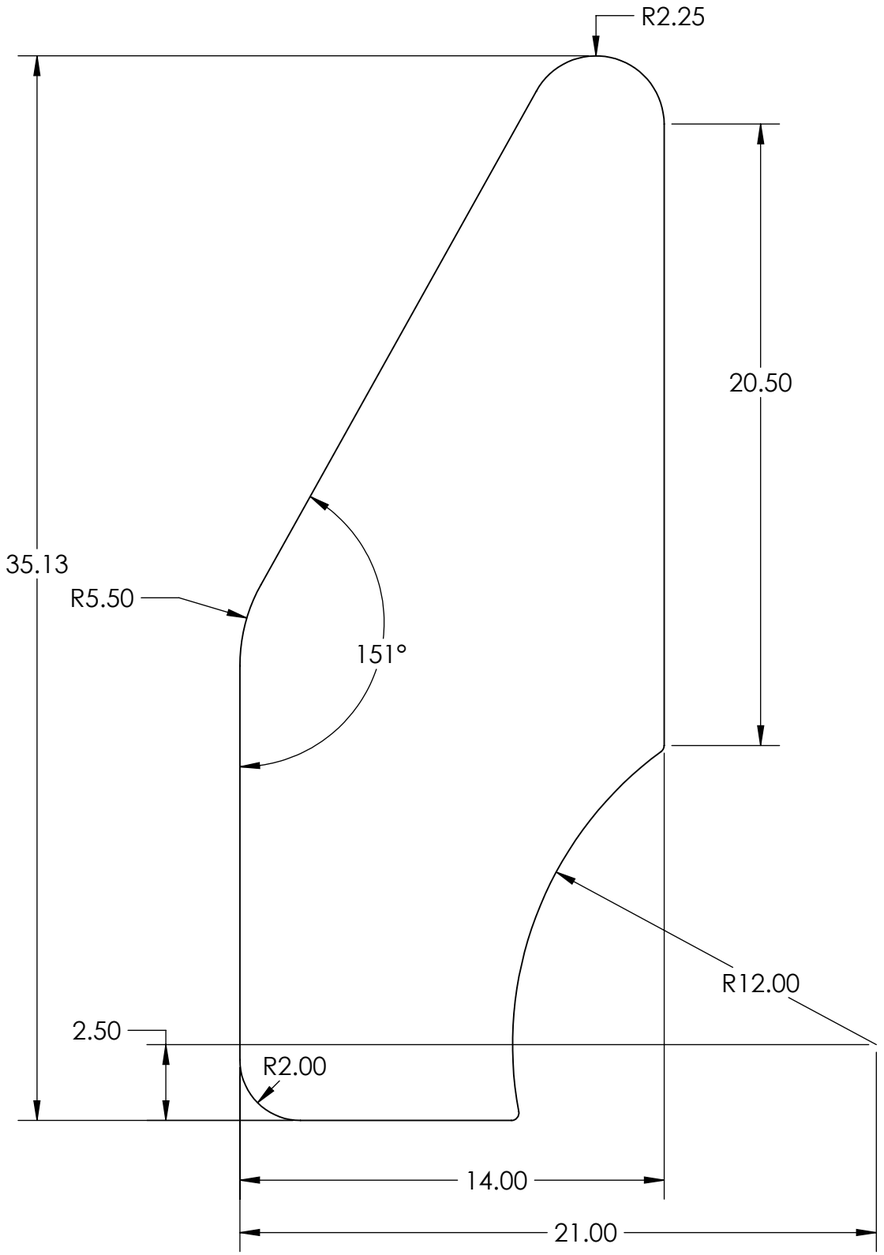

PART NUMBER	DESCRIPTION	NOTE
1-5-03-10	36.00" x 14.00" x 1.00" PLATE	DXF INCLUDED

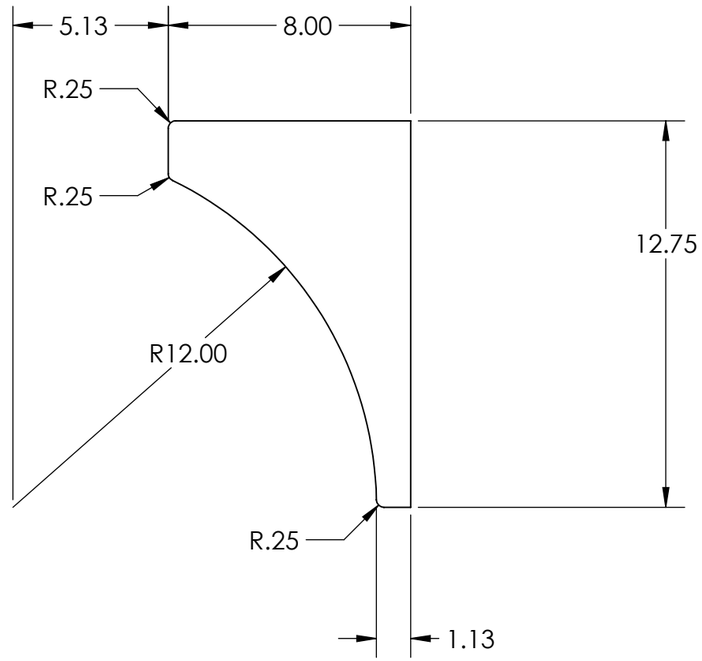

PART NUMBER	DESCRIPTION	NOTE
1-5-03-11	12.75" x 8.00" x 1.00" PLATE	DXF INCLUDED

PREPARED FOR MODERN MANUFACTURING LTD.

DIMENSIONAL UNIT: INCHES

N/A = NOT APPLICABLE

UNLESS OTHERWISE SPECIFIED

0.X ± 0.1
0.XX ± 0.06
0.XXX ± 0.030

EDUCATIONAL AND PROPRIETARY
THE INFORMATION CONTAINED IN THIS DRAWING IS FOR EDUCATIONAL USE ONLY, AND **NOT FOR FABRICATION**. CONTENT IS PROPRIETARY AND MAY NOT BE USED WITHOUT THE WRITTEN CONSENT OF THE PROJECT TEAM.

MATERIAL
CSA G40.21-44W

PARENT ASSEMBLY
1-5-03

DO NOT SCALE DRAWING

MECH 4860 - TEAM 19 DESIGN

TITLE:
MAST COLUMN
ROTATION STOPS

SIZE	DWG. NO.	REV
B	1-5-03-02	0

SCALE 1:5 | WEIGHT: N/A | SHEET 1 OF 1