WORKING WITH CSA AND NON-CSA FAMILIES WITH SOLUTION-FOCUSED, NARRATIVE, AND STRUCTURAL FAMILY THERAPIES

BY

SAU WAH MONITA CHAN

A Practicum Report
Submitted to the Faculty of Graduate Studies
In Partial Fulfillment of the Requirements
For the Degree of

Master of Social Work

Faculty of Social Work
University of Manitoba
Winnipeg, Manitoba, Canada

June, 2003

THE UNIVERSITY OF MANITOBA

FACULTY OF GRADUATE STUDIES

*****

COPYRIGHT PERMISSION PAGE

Working with CSA and Non-CSA Families with Solution-Focused, Narrative, and Structural Family Therapies

BY

Sau Wah Monita Chan

A Thesis/Practicum submitted to the Faculty of Graduate Studies of The University of Manitoba in partial fulfillment of the requirements of the degree of

MASTER OF SOCIAL WORK

SAU WAH MONITA CHAN ©2003

Permission has been granted to the Library of The University of Manitoba to lend or sell copies of this thesis/practicum, to the National Library of Canada to microfilm this thesis and to lend or sell copies of the film, and to University Microfilm Inc. to publish an abstract of this thesis/practicum.

The author reserves other publication rights, and neither this thesis/practicum nor extensive extracts from it may be printed or otherwise reproduced without the author's written permission.

TABLE OF CONTENTS

TABLES iv

FIGURES v

ACKNOWLEDGEMENTS vi

DEDICATION ix

ABSTRACT x

INTRODUCTION 1

CHAPTER ONE
Literature Review: Child Sexual Abuse (CSA)
- Definitions 4
- Current Statistics 6
- Etiology 9
- Effects of Sexual Abuse on Children 12
  - Sexually Abused Children in their Adult Years 15
  - Their Parents 21
- Factors that Affect the Impact of CSA 22
- Factors that Ameliorate the CSA Impacts 23

CHAPTER TWO
Literature Review: Treatment Modalities
- Group Therapy with Sexually Abused Children and their Mothers 29
  - Treatment Group 29
  - Parallel Groups 30
- Individual Therapy 33
- Dyadic Therapy 36
- Family Therapy 36
- Time Lines of Individual, Dyadic, Family and Group Therapies 38

CHAPTER THREE
Literature Review: Treatment Techniques
- Structural Family Therapy (SFT) 40
- Solution-focused Therapy (S-FT) 50
- Narrative Therapy (NT) 55
- A combined intervention approach of S-FT, NT and SFT 61
  - Their Similarities and Differences 62
  - Their Applications 66
- Summary 76

CHAPTER FOUR

The Practicum Overview and Evaluation Methods
The Practicum Overview and Clients' Profile Information 78
The Settings 78
Recruitment Processes 79
The criteria for referrals 81
Presentation 82
Change of Practicum Schedule 85
Time frame 85
Procedures 86
Clients 87
Methods of Evaluation 96
Self-rating Scales for Children 98
Rosenberg Self-esteem Questionnaire 98
Depression Self-rating Scale 99
Impact of Event Scale 101
Self-rating Scales for Parents 103
Index of Self-esteem 103
Beck Depression Inventory 104

CHAPTER FIVE

Case Analysis of Families A and B
Overview of Treatment Process 107
Family A 108
Family B 146

CHAPTER SIX

Case Summaries of Families C, I, J, K
Family C 179
Family I 187
Family J 194
Family K 200
Evaluations of Families C, I, J, K 204

CHAPTER SEVEN

Group Therapy
The Proposed Parallel Groups 206
Goals of Therapy 208
Group Structure 209
Group Programs 211
Therapist 212
Intervention Techniques 213
Using Narrative Therapy as the Primary Intervention Techniques 214
Stages of Group Therapy 216
Evaluation Methods 217
The Actual Group: The Children's Group 218

Group Process 218
Evaluations 265
Summary 267

CHAPTER EIGHT
Treatment of Families R, S, T, U, V
Overview of Treatment Process 272
Case Analysis
Family R 274
Family U 294
Family V 320
Case Summaries
Family S 351
Family T 362
Summary 369

CHAPTER NINE
Summary of Practicum Experience 371
S-FT, NT and SFT with the Children 372
S-FT, NT and SFT with the Parents 377
Learning Experiences 380
Conclusion 388

REFERENCES 390

APPENDICES 410
Appendix A: Social Agencies and Schools Visited 410
Appendix B: Letter to CBC Radio 413
Appendix C: Inspiration 414
Appendix D: Gift Tables 415
Appendix E: Tentative Group Contents:
Children's Group & Parent's Group 417
Appendix F: Children's Consent Form 445
Appendix G: Parent's Consent Form 447
Appendix H: Authorization for Release of Information 448
Appendix I: Children and Parents' Self-rating Scales 449
Appendix J: Client Satisfaction Questionnaire & Additional Comments 456
Appendix K: Weekly Log 459
Appendix L: "Externalizing the Problem" 460
Appendix M: Narrative Letter to Family R 461
Appendix N: Family U's Letters 463
Appendix O: Therapy Goals of Fern and Kerri 464
Appendix P: Cards, Letters, Certificates, Posters 465

TABLES

Table 4.1 Profile of Recruitment Contacts with Schools and Social Agencies 84

4.2 Profile of Child Clients at EHCC 89

4.3 Profile of Parent Clients (Mothers) at EHCC 90

4.4 Profile of Intervention at EHCC 91

4.5 Profile of Child Clients at the Family Centre 93

4.6 Profile of Parent Clients at the Family Centre 94

4.7 Profile of Intervention at the Family Centre 95

Table 5.1 Janice's Scores of Rosenberg Self-esteem Scale (RSE) 140

5.2 Janice's Scores of Depression Self-rating Scale (DSRS) 140

5.3 Janice's Scores of Impact of Event Scale (IES) 141

5.4 Tiffany's Scores of Index of Self-esteem and Beck Depression Inventory 143

5.5 Hope's Scores of Rosenberg Self-esteem Scale (RSE) 170

5.6 Hope's Scores of Depression Self-rating Scale (DSRS) 171

5.7 Hope's Scores of Impact of Event Scale (IES) 172

5.8 Lucy's Scores of Index of Self-esteem and Beck Depression Inventory 174

Table 6.1 Children's Scales: Scores of RSE, DSRS and IES of Families C, I, K 204

6.2 Parents' Scales: Scores of ISE and BDI of Families C, K 205

Table 7.1 Table illustration of Janice's daily, intermediate as well as long term goals 242

7.2 Table illustration of Hope's daily, intermediate

as well as long term goals.....242

7.3 Table illustration of Kitty's daily, intermediate as well as long term goals.....243

7.4 Comparison of Janice and Hope's perception of self-acceptance..... 257

Table 8.1 Children's Scales: RSE, DSRS, & IES Scores of Family R 290

8.2 Parent's Scales: BDI & ISE Scores of Family R 290

8.3 Children's Scales: RSE, DSRS, & IES Scores of Family U 316

8.4 Parent's Scales: BDI & ISE Scores of Family U 316

8.5 Children's Scales: RSE, DSRS, & IES Scores of Family V 346

8.6 Parent's Scales: BDI & ISE Scores of Family V 346

8.7 Parent's Scales: BDI & ISE Scores of Family S 359

8.8 Parent's Scales: BDI & ISE Scores of Family T 367

FIGURES

Figure 5.1 Janice's Scores of IES: Intrusive and Avoidant Scores 141

5.2 Hope's scores of IES: Intrusive and Avoidant Scores 173

Figure 8.1 Family R - Carol's Genogram 276

8.2 Family U - Fern's Genogram 296

8.3 Family V - Kerri's Genogram 323

ACKNOWLEDGEMENTS

To my mother, you are my love, my admiration, my joy, my inspiration. This practicum report would never have been accomplished without your love and inspiration. Thank you for watching over me, praying for me, guiding me, and walking with me to complete this Masters program. I love you very much. I have written this report for you as I promised.

To my father, thanks for being a good father. The love from you and mother has always made me feel so treasured and able to share this love with other people. You and mother have instilled the spirit of loving others in my heart and I thank you for that. Through the examples of your lives, you both guided me never to give up, but to persevere. These values have helped me to work patiently to accomplish the writing of this report. Mother, thanks for teaching me to have faith. Father, thanks for teaching me to believe there are many possibilities in life.

I am very honored and thankful to have a great team of committee members to make this project realized. Your help is very much appreciated.

To Professor Don Fuchs, the Dean of the Social Work Faculty, thank you for being my primary advisor and committee chair. Thank you for your trust and encouragement to develop my own ideas and practice style in the practicum, and giving me full autonomy to accomplish the learning goals of this project. Thank you for being my mentor, guiding me with patience, gentleness, and wisdom. As well, I thank you for your tireless efforts in reviewing the various drafts of my practicum report and giving me invaluable comments.

To David Charabin, thank you for being my supervisor at Elizabeth Hill Counseling Centre (EHCC) and my former committee member. Thank you so much for providing timely advice and support, and reading numerous reports, faxes, letters and other correspondence for this project.

To Arla Marshall, thank you for being my clinical supervisor at the Family Centre and my committee member. Thank you for being extremely supportive and resourceful in your help during my practicum. Thank you for your excellent clinical guidance and unique perspective. The invaluable and delightful discussions during the supervision have greatly contributed to my learning. Thank you for encouraging me to persevere in the write-up of this practicum report. Also, thanks for your support throughout the whole project.

To Professor Harvy Frankel, the Associate Dean of the Social Work Faculty, thank you for taking up this sudden commitment by agreeing to be my committee member when David left EHCC. Thank you for your great help and support at EHCC. It has meant so much to me. Thanks for your enormous support during the writing process of this report, and your invaluable theoretical and clinical contribution. As well, I thank you for your kindness, thoughtfulness, and assistance throughout this project and all the years of my studies.

To Elizabeth Hill Counseling Centre and the Family Centre, thank you for providing me an opportunity to conduct my project at your agency. Thank you for your support to this project and for allowing full autonomy in my practice with clients.

To Dr. Michael Thomas, the director of Psychological Service Centre, I am very grateful and greatly honored with your offer to provide editorial support to this report. Thank you for being my principal editor and for spending tremendous time and effort to edit an early draft of all my theory chapters and practicum chapters. Thank you also for providing insightful feedback to my clinical work. Thanks for your affirmation and encouragement. As well, thanks so much for having been extremely supportive and helpful during this project.

To all who have helped with editing or reading the drafts of this report, thank you very much.

To the children and families who volunteered for this project, thank you so much for your participation and for enabling me to put theory into practice in the practicum. I felt very honored to be allowed to walk with you during part of your rehabilitation journey. Thank you for trusting me and sharing your experiences with me. Thank you for leaving your footprints on this report. Thank you so much.

To Elizabeth Chan, my sister, without your love and support, I would not be able to complete writing this report. Having witnessed my pledge to our mother on the day of her passing that I would write this report for her, you always reminded me and urged me to keep my promise. I thank you so much for calling me every morning around 7a.m. to pray with me as mother usually did. During Christmas holidays, 2001, while I was visiting mom's earthly home in Toronto, you called me later in the days. I am sure not a day went by without your call. Thank you so much for telling me about the love of our mother and trying your best to help me move on. After one and a half years of your loving endeavor, you have continued to call me weekly and encouraged my writing. Thanks for making sure I have kept my promise to mother.

To Rolic Chan, my brother, thanks for your support and advice during my studies and the write-up of this report. Your kindness is greatly appreciated.

To all my other family members, thank you for your encouragement throughout my studies and urging me to graduate sooner. This helped me work harder to graduate. Thank you.

To my spiritual mentors and my old friends, Pastor Edward Leung and his wife, Grace, thank you for mentoring me through e-mails during my graduate studies. Thanks for your prayers for my family and me. Thanks for letting me pour out my heart to you and for your support and advice encouraging me to accomplish this project, even though you have to minister in your busy church in Texas. Thanks for your love.

To Reverend Chan Kam Hoi, you are always a dear heart to my mother's friendship. Thank you for the love you had for her. Thanks for your prayers for my family and for my studies.

To Caleb Fellowship, Hong Kong, thanks for your prayers throughout my graduate studies. Thanks also for praying for my many needs and for my family so that I could concentrate to complete my studies.

To all helpers who have aided me behind the scenes or anonymously in my Masters program, I am very grateful to your support and kindness.

Finally, I thank my God, to whom I entrusted with this project.

This report is gratefully dedicated to

my mother, Pan Min Chu.

Mother, you are always wanted, needed, appreciated,
treasured and loved
in all your children's hearts.

ABSTRACT

This report begins with a comprehensive literature review on child sexual abuse (CSA). It describes CSA definitions, statistics, etiology, and effects on the child victim and the non-offending mother. The report emphasizes individual, dyadic, family, and group therapies as treatment modalities for child sexual abuse. As well, it outlines solution-focused therapy (S-FT), narrative therapy (NT), structural family therapy (SFT) and their applications in working with CSA families. Further, the report discusses the effectiveness of using S-FT, NT and SFT with a wide age range of clients in the aforementioned treatment modalities to treat or alleviate both CSA and non-CSA symptoms as well as enhance family resilience.

The following report describes the student therapist's practicum experience. Firstly, the student therapist recruited clients and conducted presentations about CSA issues at three inner-city junior high schools to raise public awareness of the issue. Secondly, the student therapist provided individual, dyadic, family and group therapies for CSA families at Elizabeth Hill Counseling Centre (EHCC). Thirdly, the student therapist provided individual, dyadic and family therapies for families whose primary concern was parenting issues at the Family Centre. Finally, this report includes evaluation methods, case examples, specific interventions, limitations and strengths of S-FT, NT, SFT and their potential implications for CSA and non-CSA treatment. Two of the treatment implications are that the use of S-FT and NT techniques can be used either alone or in conjunction with play therapy to work with children as young as five years old who are verbally expressive.

INTRODUCTION

This report describes my practicum, completed for partial fulfillment of the Master of Social Work degree at the University of Manitoba.

Learning Objectives

My learning objectives of this practicum were:

1. To learn to plan, implement and evaluate a parallel group model for both parents and sexually abused children.
2. To develop social work experience at the community level by conducting CSA presentations in inner city schools, and by providing therapy at clients' homes and at their schools.
3. To demonstrate that solution-focused, narrative, and structural family therapies can work effectively with a wide age range of clients in individual, dyadic, family, and group therapies in the treatment of CSA and non-CSA issues.
4. To be effective in helping sexually abused children by alleviating their CSA symptoms.

The practicum included two phases. The first phase was conducted at Elizabeth Hill Counseling Centre (EHCC). My intervention focus at EHCC was to work with sexually abused children and their mothers to alleviate the children's symptoms and strengthen their family's resilience. The second phase was held at the Family Centre. My treatment focus there was to work with parenting issues. The purpose of working with

different families and treatment issues in the two practicum settings was to gain a variety of treatment experiences.

Since family has been considered the most important environment for nourishing children's growth, I believe that empowering clients and their families can reduce the possibility of symptom re-occurrence and the development of new symptoms. Thus, I employed strengthening family resilience as a parallel goal to alleviating symptoms.

This report emphasizes five treatment themes of the practicum. These themes were: first, to alleviate symptoms; second, to empower the parent-child relationship by enhancing their communication; third, to discuss healthy family relationships and a non-distorted perspective about intimacy; fourth, to introduce parenting skills; and fifth, to enhance the mother's coping with her personal issues and her child's sexual abuse.

In this project, clients were viewed in relation to their environment. Therefore, clients' relationships with their friends, boyfriends, schools and/or work were also addressed in the therapy.

Finally, this practicum was not a means to an end. Instead, it was the beginning of a healing process where the families who had experienced empowerment and learned about their strengths, resources, and potentials during therapy would find new possibilities in their lives and their families.

As this practicum was initially a treatment plan of running parallel groups for sexually abused children and their non-offending parents or caregivers at EHCC, this report will emphasize a literature review of child sexual abuse and the group treatment of CSA issues. However, the parent group was canceled due to the lack of parent clients. The project was changed to include individual, dyadic, and family therapies for the

sexually abused children and their families. A brief account of these therapies is included in this report.

To ensure confidentiality, I have chosen the names to describe Families A, B, C, I, J, K, R, S and V, while Families T and U had named themselves and their other family members in their stories. To illustrate the use of S-FT, NT, and SFT, I identified their treatment techniques in some excerpts in practicum chapters 5, 7 and 8.

Chapter 1

Literature Review

This literature review on child sexual abuse (CSA) has a focus on intrafamilial abuse or incest. It describes the definitions, statistics, and etiology of child sexual abuse. It also discusses the effects of child sexual abuse on the victim child and the non-offending mother. Finally, this review identifies the factors that affect the impact of child sexual abuse, and factors that ameliorate such effects.

1. Definitions

Child sexual abuse is a term that is often used in this literature review. However, no consensus has been reached regarding a uniform definition. There are various definitions of child sexual abuse.

According to the Badgley Report (1984), child sexual abuse means the misuse of power by someone who is in authority over a child for sexual gratification.

Other definitions of child sexual abuse may be defined as follows: First, it is sexual contact between a child who is twelve years old or younger and a pre-pubertal person who is at least 5 years older than the child. Second, it is sexual contact between an adolescent who is 13-16 years old and an adult who is 10 years older. Third, it is sexual contact between any child or adolescent who is under 16 years and any person who uses physical force (Gold, 1986, cited in Bartoi & Kinder, 1998, p.76).

Child sexual abuse is also defined as self-reported sexual contacts experienced by a person who is less than 15 years old, and such experience is initiated by someone who is at least 5 years older (Briere & Runtz, 1987, cited in Bartoi & Kinder, 1998, p.76).

Some studies describe child sexual abuse as sexual body contact and non-body contact between a person whose age is under 18 by someone of any age or relationship. Sexual body contact includes fondling and attempted or completed vaginal, oral, or anal intercourse. Non-body contact includes exhibitionism and observing masturbating (Mackey, Hacker, Weissfeld, Ambrose, Fisher, & Zobel, 1991; Wyatt, Guthrie, & Notgrass, 1992, cited in Bartoi & Kinder, 1998, p.79).

In this project, my target clients of the Children's Group are pre- and early adolescent girls who fell between the age range of 11 to 13 years and who had experienced intra-familial child sexual abuse. The treatment intervention focused on enhancing the girls' psycho-social functioning. As such, I will use Sgroi, Blick, and Porter's definition of incest (1982), which is derived from a psycho-social perspective to explain this type of sexual abuse. According to Sgroi, et al. (1982), incest means any form of sexual activity between a child and a parent, a stepparent, an extended family member, or a surrogate parent figure. The sexual abusive behaviors include exposure, observation of the child, masturbation, inappropriate touching and penetration.

"Adolescence" is another term frequently used in this report. It is often viewed as the transition period of life between the age of 13 and 18. The pre- or early adolescents experience developmental growth marked by rapid changes in their physical, affective, cognitive and social developments. Their most common issues are how to establish an individual identity and successful social relationships (Schmidt, 1996; Jaffe et al., 1990,

cited in Rybarik, Dosch, Gilmore & Krajewski, 1995, p.225). Older adolescents may like to try out new behaviors and different lifestyles. They may develop different values and perspectives from their parents and have intense friendships or relationships with the opposite sex (Mouzakitis & Varghese, 1995). For the purpose of this practicum, adolescents refer to the pre- and early adolescents who were between the age of 11 and 13 and who had experienced sexual abuse.

2. Current Statistics of Child Sexual Abuse

Research conducted over the past decade indicated that under-reporting, different definitions of child sexual abuse and reporting laws from different provinces, as well as sample differences on size, methodological and socio-demographic criteria all led to the lack of consensus in overall CSA statistics (Health Canada, 1999; Mathews, 1995; Richtner, Smider, & Corey, 1997).

Although there were no national figures about the trend of child sexual abuse, provincial statistics supported that its number had been increasing dramatically (Health Canada, 1999; Health and Welfare Canada, 1990). In Manitoba, there was an increase of 289% of child sexual abuse reported between the period of 1979 and 1986. Reporting remained high in the 1990's (Health Canada, 1999).

Factors that have influenced the increase in reporting include the following:

First, mandatory reporting laws have been introduced in some provinces since the late 1960s (Health Canada, 1999). Currently, reporting is mandatory under child welfare legislation. As a result, public agencies, social agencies and professionals are obliged to report when they are informed of the sexual abuse.

Second, the definitions of child sexual abuse were developed more specifically for reporting since the 1970s (Health Canada, 1999). The public learns about these developments through various channels, such as the mass media and schools. This helps to raise public awareness about the types of abuse and methods of reporting.

Third, the sexual assault legislative amendments were made in 1983 (Biesenthal & Clement, 1992). The intent of these amendments was to bring the sentences of the perpetrator in line with the severity of his or her offense, and create new criminal offense classifications specifically for child sexual abuse. One example was "invitation to sexual touching".

Fourth, the introduction of Bill C-15, An Act to Amend the Criminal Code and the Canada Evidence as it Pertains to Children in 1988 amended the rules of evidence for child sexual abuse reporting. Reporting of child sexual abuse has no longer required legal testimony with evidence (Health Canada, 1999).

Finally, the number of disclosures by adult survivors was increasing. This has also contributed to the increase in reporting rates (Biesenthal & Clement, 1992).

According to Health Canada (1997), the most extensive study of child sexual abuse was conducted by the Committee on Sexual Offence Against Children and Youths. Their definition of "unwanted sexual act" was defined as "exposure, being threatened into having sex, unwanted sexual touching, attempted sex, and sexual assault" (Mathews, 1995, p.11). The findings of this study were presented in the Badgely Report (1984), which stated that the rate of sexual abuse was about 54% for females and 31% for males (Mathews, 1995; Health Canada, 1997). The Badgley Report also indicated that four out

of five of the victims in their study experienced their abuse when they were under 21 years of age (Mathews, 1995).

The data collected by the Badgley Committee through a National Population Survey (1983) revealed that more than 95% of CSA abusers were males, and a majority of the victims were females. According to this survey, all ages of children were at risk of sexual abuse. The highest at risk group was the 14 to 15 year old population (of all girl victims: 36.6%; of all boy victims: 35.6%). The second high-risk group was for ages 7 to 11 years old (girls: 29.4%; boys 27.1%). The third highest at risk group was the 12 to 13 year old group (girls: 24.8%; boys: 25.4%). The least at risk group consisted of children under 7 years old (girls: 9.2%; boys: 11.9%) (Badgley Report, p.199, cited in Health and Welfare Canada, 1990, p.22).

The Revised Uniform Crime Reports (UCR2), an incident-based survey whose information was collected regionally through sixteen police forces in 1991, indicated that the majority of the accused were males (99.0%) and 87.5% of them were known to the victim. In this survey, the offenders were classified as: Ex-spouse, 0.6%; parent, 18.3%; child or sibling, 1.1%; other members of the immediate family, 10.7%; extended family, 9.6%; close friends, 6.8%; business relationships, 3.1%; casual acquaintances, 37.3%; strangers, 7.2%; and "unknown", 5.2% (Biesenthal & Clement, 1992).

Among sexual abuse cases, a high number of offenses were reported as incest. In Russell's study (1986), 11% of the perpetrators were strangers, 60% were known but were unrelated acquaintances or friends, and 29% were relatives. Of this 29% of relatives, 25% were uncles, 24% were biological, adoptive, step or foster parents, and 16% were cousins (Russell, 1986, cited in Krane, 1990, p15).

Russell's research on adult survivors of intrafamilial child sexual abuse suggested that the incidence rates were underestimated. It also claimed that one in five girls may have been sexually abused by a family member before they reached eighteen (Russell, 1984, cited in Andrews, 1994, p3).

Other research indicated that about 15% to 45% of the females (Finkelhor, 1979; Peters, 1988; Russell, 1983; & Watt, 1985, cited in Johnson, 1997, p.101), and 3% to 31% of the males had experienced child sexual abuse (Becker, 1988; Peters, Wyatt, & Finkelhor, 1986; Walt & Peters, 1986, cited in Johnson, 1997, p.101). Some rigorous studies suggested that the prevalence of child sexual abuse was between 15% to 30%, with female victims two or three times more frequent than males. The most conservative of these empirical estimates was that one of every seven women had experienced child sexual abuse (Richter et al., 1997).

Although there lacks conclusive and consistent data about child sexual abuse, the number of reports is alarming and the impact of abuse on the victims and their families deserves attention.

3. Etiology of Child Sexual Abuse

Most of the etiological models of child sexual abuse view that sexual abuse effects from one single perspective, the perpetrators were the cause (Health and Welfare Canada, 1990; Azar, Povilaitis, Lauretti, & Pouquette, 1998). In the following, I will discuss different perspectives which share the mentioned same view.

The intergenerational transmission perspective views that prior abuse or maltreatment of an individual may place the victim at a greater risk of repeating sexual

abuse (Renshaw, 1994, cited in Azar et al., 1998, p.13). Victims may abuse their children to gain a sense of control that was lost as a result of their own abuse. They may commit the offense because of feelings of insecurity in their relationships. They may have intimacy deficits with their own partners, and use aggression to pursue sexual contacts with inappropriate partners (Ryan, 1989; Alexander, 1992; & Marshall, 1989, cited in Azar et al., 1998, p.13). As well, if the members are very involved in fusing into the family's beliefs, rules and emotions, they become less differentiated in their feelings, thoughts and behaviors. The victim may carry his unresolved issues and other family experiences from his family-of-origin into his future family (Nichols & Schwartz, 1998; Richardson, 1995). In his new family, he may display a similar perception as his father regarding children and abuse his own children as his father had abused him.

Higher rates of incest have been reported among non-biological fathers or biological fathers who did not participate in the crucial early socialization and nurturing activities of the child. These activities include diapering and feeding (Daly & Wilson, 1985; Parker & Parker, 1986, cited in Azar et al., 1998, p.13). The sociological perspective views that parents who are not involved in nurturing activities may fail to develop a close bonding relationship with their children. Through the lack of attachment, they may not care how it would hurt their children when they sexually abuse them.

On the other hand, the feminist perspective views that patriarchy, a system of male domination and control, has penetrated into every part of our society (Ballou & Gabalac, 1985; Eisenstein, 1983; Jaggar & Rothenberg, 1984; Thorne & Yalom, 1982, cited in Krane, 1990, p11). This male dominance is realized at the expense of women and children, who are the most vulnerable groups in society (Krane, 1990). This perspective

suggests that the patriarchal social structure and ideology of our society have contributed to male perpetuated sexual abuses against children and women (Krane, 1990).

Araji and Finkelhor (1985) suggested that there are four categories of theories that may explain the occurrence of sexual abuse (Araji & Finkelhor, 1985, cited in Krane, 1990, p. 11-12).

The first category is *emotional experience*. These theories view that when the perpetrators' emotional needs are not met by adults, they use power and control to victimize a child to help them overcome their anxiety and satisfy their emotional needs.

The second category is *sexual arousal*. These theories suggest that the perpetrators have a heightened arousal towards children and sexually abuse them through learning from environmental factors. These factors could include the modeling of the mass media, or their father who sexually abused them or their siblings.

The third category is *blockage*. These theories hold that perpetrators experience sexual difficulties with adult women. They lack social skills to maintain healthy relationships. They often feel insecure and are rejected by their partners in intimacy. They might also be too timid to express their sexual needs to their partners. Gradually, they develop repressive attitudes towards adult sexuality. To meet their sexual needs, they seek sexual gratification from children instead.

The fourth category is *disinhibition*. These theories claim that there are some conditions which minimize personal inhibitions and the influence of social restraints on sexual abuse. Factors that may reduce personal inhibitions include personality disturbance, psychopathic tendencies, alcohol consumption, patriarchal subculture, the

lack of impulse control, and a stepfather status. The situational factors that minimize the impact of social restraints include unemployment, sudden loss, and marital distress.

Recently, theories explaining child sexual abuse have moved away from focusing on one single factor of abuse coming from the perpetrator since no single factor can fully explain its etiology. Instead, current trends tend to emphasize a person-in-environment transactional explanation (Azar, Povilaitis, Lauretti, & Pouquette,1998). Increasingly, it is acknowledged that both socio-cultural and physical environmental factors have also led to the occurrence of child sexual abuse (Azar et al., 1998).

4. Effects of Child Sexual Abuse

This section describes effects of child sexual abuse (CSA) on children, these children in their adult years, and on their parents.

A. Effects of sexual abuse on children

Research suggests that a definitive causal relationship between child sexual abuse and psychological as well as interpersonal problems cannot be established by using current retrospective research methodologies. It is because the study samples are often too small to draw a valid conclusion and there is a high likelihood that some victims will recover without treatment. Moreover, CSA symptoms may develop in children over time. The manifestation of symptoms is therefore difficult to link to their sexual abuse as other traumatic events may also lead to similar CSA symptoms (Briere & Elliot, 1994).

However, many findings in the CSA literature indicate that child sexual abuse can be a major risk factor which affects the child's short-term functioning and later adult

functioning (Sgroi et al., 1982; Mouzakitis & Varghese, 1985 ; Briere & Elliot, 1994). Findings of current longitudinal studies also support the assertion that child sexual abuse may lead to subsequent difficulties (Briere & Elliot, 1994).

Briere and Elliot (1994) have grouped the post-traumatic symptoms into the following categories:

First, it is post-traumatic stress. It refers to enduring psychological symptoms that result from a highly psychologically disruptive event (Briere, 1992). These symptoms include frequent re-experiencing of the abuse through nightmares, sleep disturbance and intrusive thoughts, and avoidance by suppressing or blocking memories of sexual abuse (Courtois, 1988; American Psychiatric Association, 1987, cited in Briere & Elliot, 1994, p.20).

Second, it is cognitive distortions. The child victim's perception about her self-esteem, world-view and her affective capacities are distorted (Finkelhor & Browne, 1985, cited in Briere, 1992, p.24). Studies about the cognitive impacts of child sexual abuse support that CSA experience is linked to subsequent guilt, low self-esteem, self-blame, impaired trust, and feelings of hopelessness and helplessness (Jehu, Gazan, & Klassen, 1984-1985, cited in Briere & Elliot, 1994, p.23; Briere & Elliot, 1994).

Third, it is emotional distress. It includes symptoms of depression, anxiety and anger (Browne & Finkelhor, 1986, cited in Briere, 1992, p.29; Beck, 1967, 1976, cited in Briere, 1992, p.31).

Fourth, it is avoidance behavior. Here it refers to the way a child victim copes with her trauma. The child may use ineffective coping methods by avoiding previous memories of abuse and dissociating feelings from her abuse experience (American

Psychiatric Association, 1987, cited in Briere, 1992, p.36). Other examples include emotional numbing, suicide, drug abuse, and indiscriminate sexual behavior (Briere & Elliot, 1994).

Fifth, it is interpersonal difficulties. These include having difficulties in trusting others, in maintaining interpersonal closeness (Briere, 1992), and in forming or maintaining intimate relationships (Curtois, 1988; Elliott & Garbrielson-Cabush, 1990; Finkelhor et al., 1989, cited in Briere & Elliot, 1994, p.50).

Other research shows that children and adolescents' sexual abuse symptoms may be manifested by mental disassociation, running away, promiscuous behavior, and somatic complaints. Some may develop suicidal thoughts, drug and alcohol abuse, eating disorders, school problems, and poor social relationships (Sgroi et al., 1982; Finkelhor & Brown, 1988; Beth, 1999).

The impacts of sexual abuse on adolescents are often traumatic in nature, but they are not uniform in severity (Briere & Elliot, 1994). This may be due to the fact that some children are more resilient than other children, and the forms of sexual abuse may affect each individual child differently (Tong et al., 1987). Research indicates that some children are able to cope, survive and even thrive in spite of their sexual abuse, while other children may not experience CSA symptoms at the time of the abuse but later in their adulthood (Beutler, Williams, & Zetzer, 1994; Briere & Elliot, 1994).

A comprehensive review of 45 empirical studies from the United States revealed that 20% to 50% of sexually abused children in the study were without traumatic symptoms at the initial assessment. However, they were found to be more vulnerable to stress, and there were about 10% to 25% of victims who became worse over a two-year

period following their victimization (Kendall-Tackett et al., 1993, cited in Beutler et al., 1994, p.163). Another study indicated that about 70% of sexually abused children were symptom free, but 30% of them might develop traumatic symptoms over time (Games-Schwartz et al., 1985, cited in Beutler et al., 1994, p.163).

Some longitudinal studies covering children in all age groups also indicated that about 55% to 66% of sexually abused children showed significant improvement with or without treatment, and they seemed to return to normal functioning. There were only about 10% to 15% of victims who actually became worse after a 2-year period following victimization (Kendall-Tackett and her colleagues,1993, cited in Beutler et al., 1994, p.63).

From the mentioned studies, it is clear that CSA symptoms may not fully manifest themselves immediately in children, but may continue to affect them later in their life.

The findings of these studies helped me consider if treatment should be crisis-oriented to alleviate immediate CSA symptoms, or should aim at a planned change to empower the families to enhance the child's coping and reduce the possibility of developing CSA symptoms in adulthood. I incorporated both as treatment goals in this project, since I believe that alleviating clients' symptoms is not adequate. It is also important for treatment to be future-oriented and preventive in nature. Therefore, the following section is devoted to discuss the CSA symptoms that often manifest themselves in the victim's adulthood.

B. Effects of sexual abuse on sexually abused children in their adult years

One of the most common long-term CSA impacts carried into adulthood is depression. Studies indicate that about two-thirds to three-quarters of sexually abused

children have experienced at least one clinically significant episode of depression in adulthood. Other prevalent long-term CSA impacts include: (a) a low-self-esteem, anxiety and social isolation, (b) interpersonal relationship problems, (c) sexual dysfunctions, (d) vulnerability to re-victimization, and (e) other problems in their lives (Bagley, 1991; Beitchman et al, 1992; Browne & Finkelhor, 1986; Cunningham et al., 1988; Drossman et al, 1990; Murray,1993; Wyatt et al, 1992, cited in Ritcher et al, 1997, p.54).

a. A low self-esteem, anxiety and social isolation

Many sexually abused children have developed a low self-esteem, because they feel humiliated and shameful of their sexual abuse (Beth, 1999). They tend to develop a distorted self-evaluation (Brown, 1987, cited in Beth, 1999, p.50) and became fearful of negative evaluation (Beth, 1999). It often results that they experience anxiety and dissatisfaction in their social interactions, especially with the opposite sex in their adulthood (Martinson & Zerface, 1970, cited in Beth, 1999, p.51).

Research indicates that CSA survivors are often found to be more socially isolated and have poorer social support networks than non-CSA survivors. This finding is further supported by another study that CSA survivors are more lonely and less likely to make use of their social support system than the non-CSA survivors (Gibson & Hartshore, 1996, cited in Bagley & Young, 1998, p.71). Without adequate social support, they are more likely to develop depression when they experience stress (Bagley & Young, 1998).

b. Interpersonal relationship problems

When sexual abuse takes place in the child's early and pre-adolescence, the child is experiencing an adjustment period of intense transitional developmental changes. Adjustment to developmental changes and coping with child sexual abuse often result in ongoing disturbances in the child's intimate relationship in adulthood (Cole & Putnam, 1992, cited in Pistorello & Follette, 1998, p.473). The child may have trust issues and a low self-esteem as a result of her abuse that she becomes unable to maintain a close interpersonal relationship with her peers. Her problematic patterns of relating to others often continue as a pattern in her adult intimate relationships (Briere, 1988; Russell, 1986, cited in Pistorello & Follette, 1998, p.473).

The study of Tong, Oates, and McDowell (1987) indicates that sexually abused children have persisting problems with their behavior, school performance and self-esteem. With a low self-esteem, they become less able to relate to others and develop social skills to establish stable, supportive relationships. Their unsuccessful interaction patterns with peers very often extend into their adulthood that they may experience difficulties in adult relationships and intimacy.

c. Sexual dysfunctions

Studies support that child sexual abuse has a large impact on adult sexuality since the child's ability to develop sexually at her own pace is disrupted by her sexual abuse (Wyatt, 1993, cited in Bartoi & Kinder, 1998, p.85). Many CSA female survivors have also reported that they feel insecure about their sexual attractiveness and have a lower

sexual self-esteem (Koss & Harvey, 1991; McCahill, Meyer, & Fischman, 1979, cited in Beth, 1999, p.50). These feelings may cause sexual dysfunction in intimacy.

CSA impacts on the child's adult sexuality may include:

Many CSA survivors remember the experiences of invalidation, intrusion, or pain from their sexual abuse when they are intimate with their partner (Briere,1992; Herman, 1992, cited in Pistorello & Follette, 1998, p.474). The feeling of helplessness and loss of control which occurred in their sexual abuse may re-enact, disrupting their sexual satisfaction and functioning (Ellis, Calhoun & Atkeson, 1981, cited in Bartoi & Kinder, 1998, p.85).

Some CSA survivors may experience decreased sexual interest. When they are engaging in sexual activities, the sexual acts may stimulate associations, resulting in flashbacks and somatic distress. They may withdraw themselves and shrink from emotional closeness in sexual activity to avoid pain. On the other hand, some CSA survivors may lose their sense of control in intimate contacts and have heightened sexual needs that are often associated with a history of multiple, sequential, and brief sexual involvement in their childhood (Courtois; 1979; Maltz & Holman, 1987, cited in Pistorello & Follette, 1998, p.474).

As well, their sexual abuse may affect their ability and willingness to trust others that they often experience a great deal of anxiety when having intimate contacts (Briere, 1992; Herman, 1992, cited in Pistorello & Follette, 1998, p.474). Research indicates that CSA survivors have more severe sexual problems and lower sexual satisfaction than women who have not been sexually victimized (Meiselman, 1978; Waltz, 1993, cited in Pistorello & Follette, 1998, p.474).

Further research supports that symptoms of intimacy problems were correlated with longer and earlier onset of the most severe abuse. Lacking a feeling of control was correlated with the women's current beliefs that their non-offending parent(s) knew about the abuse but did not stop it. Sexual difficulties, such as sex avoidance and sex history guilt, were correlated with the survivors' level of current traumatic symptoms (Pistorello & Follette, 1998).

d. Vulnerability to re-victimization

Sexually abused children are often re-victimized in their adulthood. The reasons are as follows:

First, child sexual abuse has an effect on the likelihood of indiscriminate sexual behavior and re-victimization in adulthood (Alexander & Lupfer, 1987; Wind & Silvern, 1992, cited in Bartoi & Kinder, 1998, p.77). The violation of one's body may blur the child's sense of boundary. The child may engage in sexual activities to cope with stress and this coping method may extend to his or her adulthood. Furthermore, the impairment of self-esteem, self-protection, and trust from the sexual abuse makes CSA survivors increasingly vulnerable. They may become unable to anticipate dangerous sexual situations from abusive partners (Finkelhor & Browne, 1998, cited in Bartoi & Kinder, 1998, p.77).

Second, sexually abused children learn inappropriate sexual values in their abuse. During their sexual abuse, some children were given affection, attention, privileges and gifts for sexual behavior. They may develop misconceptions about their body as well as

distorted sexual values (Finkelhor & Browne, 1988). They may continue their sexual activity with other people for rewards.

Third, children or adolescents who have experienced child sexual abuse are often involved in abusive relationships in their adulthood (Blackman, 1989, cited in Beth, 1999, p.48). Research indicates that CSA survivors who have a low self-esteem may become needful for other people's approval (Watson & Friend, 1969, cited in Beth, 1999, p.62). This need may prompt them to get involved in relationships with men who are charming and giving flattering remarks, but who are also controlling and abusive (Beth, 1999). As well, their distorted self-evaluation may cause them to develop negative expectations about heterosexual relationships. These negative expectations may affect them to become more tolerant towards further abuse than if they have positive expectations towards relationships. Studies show that the risk of rape, sexual harassment, and battering is double for survivors of childhood sexual abuse (Herman, 1992, cited in Beth, 1999, p.48).

e. <u>Other problems in their lives</u>

Research supports that women who experienced child sexual abuse tend to have a lower socio-economic income status despite of their education (Richter et al., 1997). Many of them may have somatic symptoms, mental health issues, eating disorders, suicidal attempts, and drug and alcohol abuse problems (Bagley, 1991; Beitchman et al., 1992; Browne & Finkelhor, 1986; Cunningham et al., 1988; Drossman et al., 1990; Murray, 1993; Wyatt et al., 1992, cited in Richter et al., 1997, p.54).

To summarize this section, many sexually abused children and CSA adult survivors share many similar post-traumatic symptoms. These symptoms include having a low self-esteem, fear of negative evaluation, social isolation, depression, trust issues, and flashbacks.

C. Effects of sexual abuse on sexually abused children's parents

It is important to address the non-offending mothers' psychological needs as an integral part of the treatment plan for their children's sexual abuse. This is because mothers are also traumatized by their children's sexual abuse experience (Newberger, Gremy, Waternaux, & Newberger, 1993). Some mothers may feel that they failed to protect their children, especially when they were aware of the incest when living with the perpetrator. They may experience feelings of guilt (Sgroi, Blick, & Porter, 1982). They may also experience other feelings such as shame, denial, loss, betrayal, anger, depression, powerlessness and helplessness (James, 1990, cited in Carbonell, 1999, p.287; Beutler et al., 1994). Some mothers may find it difficult to perceive their children's needs, while other mothers may see the needs of their children but view themselves as inadequate to meet these needs (Henderson, 1993).

It has been reported that many mothers of sexually abused children have experienced sexual abuse in their childhood (Briere & Elliot, 1994 ; Beutler et al., 1994). In families where both mothers and children have experienced incest, there is often a lack of emotional closeness (Alexander, 1990; Friedman, 1988, cited in Beutler et al., 1994, p.169). When the children disclose their sexual abuse, the mothers may be reminded of their child sexual abuse and struggle with their unresolved CSA issues. As a result, they

may become out of touch with the distress and emotional needs of their children (Everson, Hunter, Runyon, Edelsohn, & Couter, 1989).

In some families, the mothers cannot cope with their children's sexual abuse and become emotionally distressed. Their distress may hamper their children's recovery (Billings & Moos, 1983; Griest, Forehand, Wells, & McMahon, 1980, cited in Newberger et al., 1993, p.92). Some mothers may deny their children's sexual experience. Some mothers may blame the children for breaking the family apart, especially when the perpetrator is a father-figure and has been arrested for the offense (Newberger et al., 1993). When the mothers are not able to offer immediate support to their children, the children may feel helpless and use unhealthy coping methods to alleviate their pain.

5. Factors that Affect the Impact of Child Sexual Abuse

The impact of child sexual abuse is a combined consequence of the interplay of various factors. They are (Finkelhor & Browne, 1988; Health & Welfare Canada, 1990; Mennen & Meadow, 1994):

(a) The type of abuse: Research suggests that child sexual abuse involving penetration results in higher levels of depression, lower self-esteem, and more negative behavior than those do not suffer such abuse.

(b) The relationship of perpetrator: Research has both supported and refuted the idea that abuse by a biological father is more traumatic.

(c) The degree of relationship: It is found that if there is a close emotional bond between the child and the father, the level of distress is greater than in relationships where there is no such bond.

(d) The use of force: The use of force and longer duration of abuse cause more serious distress.

(e) The length of abuse: The impact is more devastating when the length of child sexual abuse is longer.

(f) It has not been demonstrated that the onset of age has a relationship to the severity of CSA trauma.

6. Factors that Ameliorate CSA Impacts

Sexual abuse by itself is not a sufficiently strong indicator of subsequent risk in developing long-term CSA impacts. There are other factors, in children's environment, leading to the increase of subsequent adjustment problems or helping to ameliorate the long-term impacts of child sexual abuse (Starr & Wolfe, 1991, cited in Beutler et al., 1994, p.167).

Social support is one example. It may moderate the impacts of sexual abuse and increase resiliency in children (Beutler et al., 1994). It can be provided by the non-offending parent(s), siblings, extended kin, non-family adults and friends. Social support can influence children's psychological health and adjustment (Bryant, 1985; cited in Feiring, Candice, Taska, Lynn, 1988, p.2). However, developmental issues of children should be considered when we examine how the sources of support function as a protective factor (Feiring et al., 1998).

Research suggests that the kind of social support received by children and adolescents after the sexual abuse disclosure affect their coping and the level of psychological distress. Adolescents are affected by their developmental tasks that they

tend to view friends as their source of support (Kendall-Tachett et al., 1993, cited in Feiring et al., 1998, p.2). Unlike children, adolescents seek autonomy from their parents and tend to spend less time with them (Collins & Russell, 1991; Fuligni & Eccles, 1993; Larson and Richard, 1991, cited in Feiring et al., 1998, p.7). They may become less dependent on parents for emotional support and protection, and feel less supported by their parents (Steinberg, 1990, cited in Feiring et al., 1998, p.2).

Pre- and early adolescents begin to experience the mentioned changes in their family relationships. They begin to strive for greater autonomy from their parents and develop their identity through relationships with peers (Feiring et al., 1998). They have increased unsupervised time with peers, whose approval and advice become increasingly important to them (Browne, 1990; Simmons & Blyth, 1987, cited in Feiring et al., 1998, p.7). Peer relations have become an important source for identification and support. However, their desire to seek social support from their peers may place them at risk, especially when their peers could not provide appropriate help at their young age and when their peers are not good influences (Feiring et al., 1998).

Some studies of non-abused families indicate that adolescents tend to rely on peers more than their parents for companionship and emotional support. These studies also support that those who receive support from parents in times of stress are often better adjusted (Lamborn & Steinberg, 1993; Steinberg, 1990, cited in Feiring et al., 1998, p.7).

The foregoing studies suggest that peer support is very important to adolescents and can affect their daily life as well as their coping with their sexual abuse. However, parental support can be a more reliable source of support than peers in a child's time of distress.

Parental support is a very important source of help for children's coping after the disclosure of abuse (Beutler et al., 1994; Briere & Elliot, 1994; Conte & Schuerman, 1987). This support can enhance the child's psychological functioning while reducing her stress (Tremblay, Hebert, & Piche, 1999; Avery, Massat, & Lundy, 1998; Everson et al.,1989). Meanwhile, support from a strong parent-child relationship has the potential to bolster the child's mental health (Avery et al., 1998).

Further studies about the impact of social support on sexually abused children and adolescents at their disclosures indicate that social support helps alleviate their feeling of shame, self-blame, symptoms of depression, post-traumatic stress and poor self-esteem. Support from parents at the time of discovery is especially important for alleviating children's CSA symptoms at the disclosure as well as in their future. It helps the child victims feel less shameful, less isolated and less stigmatized. Therefore, children are able to cope better and are less likely to develop CSA symptoms (Feiring et al., 1998).

The study of Feiring, et al. (1998) indicates therapeutic strategies that focus solely on symptoms of child sexual abuse are not adequate. It suggests that strengthening parental support is as important. Since support from non-offending parents is critical to children's recovery, strategies that improve the quality of parental support may result in a more positive therapeutic outcome (Feiring et al., 1988).

Research also indicates that parents need guidance and training in giving their children appropriate support. Professional guidance can help parents process their children's sexual abuse, alleviate their children's distress and enhance their children's competency to achieve their developmental tasks (Deblinger, Lippmann, & Steer, 1996, cited in Feiring et al., p.9).

Another moderator of risk or CSA impact is the children's preferred way of coping with their post-traumatic stress. According to Beutler et al. (1994), if the externalizing coping styles are well developed, these styles may help children be better able to buffer the development of post-abuse traumatic symptoms. A study finds that adolescent girls who developed an ability to put the blame on the perpetrator for their sexual abuse experienced less effects of depression than the victims who blamed themselves (Moran & Eckenrode, 1992, cited in Beutler et al., 1994, p.109). Therefore, intervention that enhances children's externalizing techniques is helpful to their recovery, especially when children prefer this way of coping.

As well, immediate support after disclosure has an important impact on children's coping. Research indicates that supportive systems given during the acute adjustment period following disclosure can help children buffer long-term negative effects (Beutler et al., 1994). Children may not know how to relieve their distress and resolve other CSA symptoms. They may use unhealthy coping methods. Immediate support helps children develop new perspectives towards their victimization and learn effective coping skills. As a result, their distress becomes less likely to increase or cumulate through out the years to affect their other areas of life, such as their school, their relationships with family and peers.

Finally, children's resilience is another very important ameliorating factor. Research indicates that resilient children are more often found living in a healthy family environment. In this environment, there is respect for individual differences and different perspectives, warmth and care, and a clear, flexible family structure (Beavers, 1977, cited in Sayger, 1996, p.1). As well, resilient children and their families often have a strong

and positive support system both inside and outside their family (McDonald, Sayger, & Billingham, 1995, cited in Sayger, 1996, p.1). These children often have positive self-esteem, social skills, achievement motivation and problem-solving abilities (Canino & Spurlock, 1994, cited in Sayger, 1996, p.82). They develop greater capacity to adjust to new changes in the family and cope with their trauma (Beardslee & Schwoeri, 1994, cite in Sayger, 1996, p.82).

In high-risk families, resilient children seem to be able to adjust and cope better than non-resilient children. These coping abilities are manifested in their age and in their cognitive and emotional development (Beardslee & Podorefsky, 1988, cited in Sayger, 1996, p.2). They usually receive some emotional support from other family members who are adjusted well to their family environment. They are able to maintain a bond with their family while they are detached from its problems and stress (Anthony, 1987; Beardslee & Podorefsky, 1988; Beardslee & Schwoeri, 1994; Rutter, 1990, cited in Beutler et al., 1994).

Studies of family resilience suggest that the presence of even one supportive person, who is usually the non-offending mother, can empower children's coping and help alleviate the long-term negative effects of child sexual abuse (Beutler et al., 1994). These effects often manifest themselves as undesirable developmental changes in a child's life span issues, such as trust, attachment, mastery and autonomy (Schmidt, 1996). When the mothers are empathetic and supportive, they are better able to understand their children's needs, as well as their coping with post-traumatic stress and developmental issues. Their support often enhances their children's coping and ability to accomplish their developmental tasks (Emde, 19990, p.886, cited in Schmidt, 1996, p.280).

Research also indicates that in families with a supportive parent, sexually abused children often cope better and the abuse does not seem to carry on in their future family. However, in families where there is no supportive parent, there is a higher rate of the cycle of child sexual abuse in their future family (McCord, 1983, cited in Beutler et al., 1994, p.168).

In short, studies about social support and family resilience indicate that supportive parents play a very significant role in enhancing the rehabilitation of sexually abused children. Therefore, providing treatment and support for mothers of these children should not be overlooked.

Chapter 2

Treatment Modalities

A review of clinical practices suggests that characteristics of sexually abused children often determine which specific modality of treatment, such as individual, family or group therapy, can best meet their needs. The selection of a treatment modality or format may be guided by their age, gender and level of functioning (Beutler et al., 1994).

Since the impact of child sexual abuse can vary widely in severity, duration, and form, it becomes unlikely that a single treatment modality can fit all victimized populations (Beutler et al., 1994). According to a US nationwide survey of 2,258 sexual abuse treatment programs, the two most popular treatments include individual therapy and family therapy. Amongst the percentage of programs that provide services, individual therapy was chosen 93% of the time, whereas family therapy, which may or may not include the offender, was chosen 90%. Group therapy, either to be used alone or in combination with individual therapy, was used 84% of the time (Keller et al., 1989, cited in Beutler et al., 1994, p.158-159).

1. Group Therapy with Sexually Abused Children and their Mothers

Treatment Group

Group therapy has a significant impact on the prevention of long-term consequences of child sexual abuse (Richter & Snider, 1997). It is regarded by many therapists as the intervention of choice (Fall, 1988). Group therapy can be defined as

goal-directed activities with individual members of a small group to meet their socio-emotional needs and achieve group goals within a system of service delivery (Toseland & Rivas, 1998).

Group therapy has unique therapeutic consequences that individual counseling is not able to achieve. For example, group environment provides a context for the repair of interpersonal functioning and mistrust caused by the CSA trauma. Group members share their stories and feelings that help them break their secrecy of abuse. When working at their resolutions, they develop trust and friendships with other members. As well, group support enables members to feel less isolated and less stigmatized (Courtois, 1988).

Research suggests that group work is an effective intervention for girls who are affected by traumatic events such as the incidence of sexual abuse (Feiring & Taska, 1998; Carbonell & Parteleno-Barehmi, 1999). In their developmental stage, pre- and early adolescent girls are striving for autonomy from their parents and establishing an identity with their peers. Peer relations are very important to them. In a supportive group context, the girls' feelings of isolation, shame and worthlessness developed from their sexual abuse can change through the interaction with other group members (Carbonell & Parteleno-Barehmi, 1999). Together, the group members can learn new skills to cope, to feel and to function normally. As a result, support from the group enhances better adjustments for these girls (Feiring & Taska, 1998).

Parallel Groups

Parallel group modality in which a parents' group and a children's group receive parallel treatment is an effective intervention for child sexual abuse (Damon &

Waterman, 1986). Parallel groups can be structured in a parallel fashion to empower both parents and children to cope with the child's CSA trauma. Both groups share some common themes in their treatment and can be run concurrently at the same time of the day or in the same week.

The parents' group should aim to help parents solve psycho-social or unresolved issues in life, in the hope that resolution of these issues will enable them to function normally and have the ability to help their children. For instance, research finds that when the mothers have received help in dealing with their own child sexual abuse in the parents' group, they are better able to handle their children's sexual trauma more effectively (Damon & Waterman, 1986).

In the parents' group, treatment should help the mothers to (Burgoyne, 1992): (a) accept the reality of their children's sexual abuse, (b) be relieved from self-blame, guilt and other psychological distress, (c) regain self-esteem, (d) re-establish a good mother-daughter relationship, and (e) diminish their social and emotional isolation. Meanwhile, social support in the group can be a contextual variable where the mothers can share information of the community resources and discuss effective child-rearing (Lovell, 1988).

In the children's group, treatment should help sexually abused children (Spencer & Nicholson, 1992): (a) relieve them from self-blame and psychological distress, (b) increase their self-esteem, (c) help them develop a trusting relationship, (d) help them learn about appropriate boundary issues and family roles, and (e) teach them self-protection skills.

The advantages of running parallel groups are: Firstly, many mothers of sexually abused children also have CSA experiences (Beutler et al., 1994). These mothers tend to help their children cope with their abuse in a way similar to how they have handled their own child sexual abuse. If they are unable to resolve their own CSA trauma, they are not in a strong position to help their children deal with their trauma. Parallel groups can help the mothers work at their own trauma and strengthen their capacity to help their children.

Secondly, the mothers can learn about their children's therapeutic progress from the group facilitator and exchange information about the children's coping at home and in the group. This additional information is helpful in the evaluation of program and children's progress. As well, the group facilitator can impart information about how the mothers can be more supportive at home (Damon & Watermon, 1986).

Thirdly, parallel groups can empower families as a whole by improving their psycho-social functioning. When the mothers are able to manage their stress and improve their psychological and social health, they may become more aware of the children's needs and in a better position to help them. The mothers' support helps improve the children's resilience to cope better with the trauma.

Fourthly, parallel groups can strengthen the parent-child relationship. Group programs are used to enhance their mutual understanding and communication. The mothers learn parenting skills to give enhanced guidance to their daughters. The improvement in their interaction and the mothers being able to effectively parent their children often bring them closer to each other.

2. Individual Therapy

Individual therapy is an important preceding step to bring the family together before they attend family therapy (Pardeck, 1989; Spencer & Nicholson, 1988). It is necessary for the therapist to understand beforehand how the mother may react to the child in a joint interview. If the mother attending family therapy is not ready for it, the mother may give a distorted perspective about who is to blame or may even speak harshly to the child. This does not only damage the mother-child relationship, but also further distress the child and affect her recovery progress. Bagley and Young (1998) take a similar view that mothers who are not supportive to their children should first receive individual counseling. Or else, the mothers may affect the children negatively in their long-term adjustments (Everson et al., 1980; Sirles & Franke, 1989; Heriot, 1996, cited in Bagley & Young, 1998, p.71). Therefore, the therapist should provide individual therapy to mother and child until they are ready for family therapy.

In individual therapy, the therapist helps mother and child release their traumatic distress and cope better with their personal as well as family issues. The mother also learns to put the responsibility on the perpetrator and not to blame the child for her sexual abuse (Pardeck, 1989). When both mother and child are ready to engage in open communication in family therapy, they would be able to listen to each other. The mother would trust the child's account of the abuse and be supportive of her. The child would feel secure to express her anger towards the perpetrator (Faller, 1988).

Treatment should help children to: (a) feel relieved from guilt and responsibility of the abuse, (b) express their anger at being victimized and their feelings of betrayal, (c) enhance their self-esteem, (d) develop trusting relationships, (e) set an age-appropriate

family role, and (f) learn boundary issues and self-protection skills (Spencer & Nicholson, 1988).

Treatment should help mothers to: (a) accept their children's sexual abuse, (b) express their feelings of anger and being betrayed, (c) understand the effects of child sexual abuse on children, (d) increase their self-esteem, (e) learn boundaries issues and parenting skills, (f) learn to be assertive, and (g) be empowered in their living skills (Spencer & Nicholson, 1988).

Assessment with the mother in individual therapy

During the initial interviews with mothers of the incestuous families, the therapist may consider assessing the following areas to help planning a treatment for the child and the family (Faller, 1988):

(a) The family's living situation may have contributed to the sexual abuse and may continue to affect how the child copes with her trauma.

(b) The mother's partner's relationship with the child, his habit of using drugs and alcohol, his sexual history, his work ability may have caused the abuse.

(c) The mother's relationship with her partner(s), such as the quality of their couple relationship and sexual relationship, may help explain why child sexual abuse has occurred in the family.

(d) The mother's overall functioning may indicate her ability to help the child's coping.

(e) The mother's dependence on the perpetrator (her partner) may reflect her adjustment difficulties when separating from her partner.

(f) The mother's history of substance abuse, mental illness or illegal activities may reflect her general functioning, her ability to protect and parent the child.

(g) The mother's family-of-origin may have affected her overall functioning, such as her selection of mates and her ability to protect the child.

(h) The mother's sexual abuse may affect how she copes with her child's sexual abuse. In addition, the mother's abuse experiences may disable her awareness of the child's needs.

(i) The mother's level of education and employment history may reflect her overall functioning and coping.

(j) The mother's social supports may affect her coping.

(k) The mother's view of the perpetrator (her partner) may indicate her readiness to put responsibility of the abuse on the perpetrator.

(l) The quality of the relationship between the mother and the child victim, and between the mother and the non-victim children may reflect the family's overall coping and the family support for the child victim.

(m)The family roles and parenting methods may affect family transactions and how the child copes with her CSA trauma.

The discussions of the aforementioned issues could help the mother develop new perspectives about why sexual abuse happened and understand better how the family was coping with the child's CSA trauma. It enhances the mother's awareness of the family needs and helps her set goals to find solutions. The therapist learns about the mother's overall functioning, the family transaction patterns and the children's needs. This information helps the therapist plan effective treatment.

3. Dyadic Therapy

In intrafamilial sexual abuse, the most common dyadic relationships are mother-daughter, husband-wife and father-daughter relationships (Faller, 1988). Dyadic therapy facilitates clients relieve the emotional problems arising from relationship conflicts and helps re-establish these relationships. It prepares the family for further restructuring before they attend family therapy (Faller, 1988).

Faller(1988) suggests some ways to improve the mother-daughter relationship after the disclosure. They are to: (a) facilitate both mother and child share their feelings towards the child's sexual abuse, (b) resolve conflicts between the mother and the child, (c) engage the mother and child in relationship-enhancing activities, and (d) help the mother develop the role of a protector.

4. Family Therapy

Family therapy is often the final phase of treatment of intrafamilial sexual abuse. It is used after individual and dyadic sessions, and sometimes after group therapy. In family therapy, it may involve only the child and parent(s), and other times it involves the whole family. Family therapy further strengthens the positive changes in individual functioning and dyadic relationships (Faller, 1988).

Studies suggest that family therapy goals should enhance honest, direct communication between the mother and child, help them re-establish trust in each other, and strengthen their bond (Spencer & Nicholson, 1988).

Faller (1998) recommends that treatment should: (a) discuss feelings about the sexual abuse, (b) place responsibility of the abuse on the perpetrator, (c) resolve disputes

in the parent-child relationship, and (d) discuss parenting skills with the mother. In addition, the following treatment issues must not be overlooked. They are (Faller, 1988):

(a) To openly discuss the sexual abuse with the family: The therapist discusses the sexual abuse with the family at their developmental levels so that all the children can understand. All family members learn what has happened and are helped to express their feelings. Responsibility should be placed on the perpetrator. However, the mother may need to take some responsibilities in some situations.

(b) To help the family develop a healthy perspective towards sex: The therapist enhances the family's understanding of appropriate sexual behavior, how to differentiate sex from other interactions, and what is wrong about sex between an adult and a child. Inappropriate family practices and environments that may lead to sexual abuse should also be discussed.

(c) To discuss family coalitions and sub-systems: The therapist identifies coalitions and subsystems that may have hampered family functioning. The parents learn parenting skills. Every child should be treated equally to minimize the opportunity of developing coalitions among the family members. Children are encouraged to share their feelings about how they feel in a victim role and a non-victim role so that they can understand each other's needs and become more supportive of each other.

The aforesaid treatment issues reflect the problem areas of many families. Although one family may not have experienced all the issues mentioned above, these treatment issues provide guidelines to help the therapist develop his or her treatment goals.

To conclude, the treatment goals of dyadic therapy and family therapy often overlap especially when there are only two members in the family. Dyadic family intervention focuses more on enhancing parent-child relationship and alleviating the child's CSA symptoms, while family therapy emphasizes empowerment of the overall family functioning.

5. Time Lines of Individual, Dyadic, Family, and Group therapies

The length of treatment can be affected by many factors. According to Schmidt (1996), the length of brief therapy is usually determined by the constraints of the agency setting and the clients' circumstances. Agency constraints include the purpose of therapy (for assessment or for intervention as well), the therapist's leaving and the resources supporting such service. Parents play an important role in determining the length of therapy. Their perceptions about the way they want to use professional help may affect the length of service. They may attend therapy for guidance about coping with some specific symptoms of the child. They may want to work with unresolved personal issues that usually require a longer period of treatment. Therapy may start as open-ended, long-term therapy. However, parents may decide not to continue the service when they feel they have gained the therapeutic outcome, when therapy cannot meet their needs, or when they are not able to deal with the anxiety that the therapy may arouse.

Statistics indicate that most outpatient therapies are less than 20 sessions. In private practice, therapy does not exceed 26 sessions (Strupp, 1984, cited in Schmidt, 1996, p.276). A survey about studies of clinics serving children and families shows that

the most common duration of therapy is 4 to 6 sessions, which includes both assessment and intervention (Dulcan, 1984, cited in Schmidt, 1996, p.276).

Regarding group therapy, groups for incest survivors often range from 4 to 20 sessions. Many studies support the idea of giving a time-frame to the group instead of leaving it open-ended (Laube & Trefz, 1994; Courtois, 1988). The optimal length for a time-limited group should be between 10 and 20 sessions (Bergart, 1986; Cole, 1985; Gordy, 1983; Herman & Schatzow, 1984, 1987; Sprei, 1986, 1987; Tsai & Wagner, 1978, cited in Curtois, 1988, p.249). Clients who experienced child sexual abuse may have diverse issues that they require more group sessions for treatment. They need time to process the new information they have learned in the group and apply the skills in their social contexts.

Chapter 3

Treatment Techniques

There are many theories, intervention strategies and treatment techniques used in each treatment modality (Beutler et al., 1994). In this chapter, I will describe structural family therapy (SFT), solution-focused therapy (S-FT), narrative therapy (NT), and how the treatment techniques of each therapy can be used to work with CSA families to alleviate the child's symptoms as well as to enhance their family functioning.

I. Structural Family Therapy

Structural family therapy (SFT) emerged in the 1970s. Its leading figure is Minuchin. In the late 1970s, structural family therapy became the most influential and widely practiced systemic therapy (Nichols & Schwartz, 1998). SFT is a blue-print for analyzing the process of family interactions, for it provides a clear framework that explains the meanings and orders of family interactions.

Structural family therapy conceptualizes family members in their circumstances. Family members and their circumstances are inseparable. They interact with each other, and the interaction process effects change in each other (Minuchin, 1974).

The family changes according to a developmental model comprised of four main stages. They include couple formation, families with young children, families with school age children or adolescents, and families with grown children. Change may arise within the family or from its social context (Minuchin & Fishman, 1981). Families, with a great deal of flexibility, are often able to cope with such changes by developing a different

level of functioning. Sometimes, they experience more disequilibrium than balance when adjusting to the changes. When families cannot cope with change, they may enter into a crisis. To resolve the crisis, the therapist facilitates change in the family structure to make coping possible (Minuchin & Fishman, 1981).

According to SFT, family structure is composed of different subsystems. The subsystems have their boundaries, varying from rigid to diffuse. Boundaries are the rules that prescribe interaction of the family sub-systems. When family transactions are repeated, they may turn into predictable behavioral patterns (Nichols & Schwartz, 1998). There is often a hierarchical relationship among the subsystems to perform the various family functions and roles (Minuchin & Fishman, 1981; Colapinto, 1991; Richardson, 1999). Finally, each family structure is governed by family rules (Colapinto, 1991).

In short, structural family therapy is the process of helping members who are stuck in a crisis of the family's developmental stage. The therapist facilitates change in the family structure with the use of SFT techniques to enhance family functioning (Minuchin & Fishman, 1981).

Assumptions of the problem

First, the family may be stuck in a family structure, an interaction pattern or a story that does not work (Minuchin & Nicols, 1993). Families often have a story (or an explanation) about the event to make sense of their lives. This story is partly historical truth and partly a construction. The constructs of the story may be hopeful, helpful or otherwise.

Second, families often do not recognize the family strengths. They develop a narrow definition of themselves and often define themselves by problems (Minuchin & Nicols, 1993).

Third, families are stuck at their developmental stage. Families are like organisms evolving through developmental stages. Some families may fail to meet new demands of these stages and cope with changes from the outside environment. They often continue or maintain problematic transactional patterns, which give them a sense of predictability in how their families are functioning and allows them to feel secure with their situation (Minuchin & Nicols, 1993).

Assumptions of the family system

A family system has the following characteristics to allow change occurs (Minuchin & Fishman, 1981): (a) a transformation in the family structure can induce further change, (b) the family has its strengths, as it is organized around support, rules, nurture and socialization of its members, and (c) the family system has self-perpetuating properties that have its own self-regulating mechanisms to maintain change.

Treatment goals

The goals of therapy are: (a) to challenge the family about its dysfunctional interaction pattern, (b) to enhance the flexibility of the family structure to allow changes to happen, and (c) to help the family adapt to an alternative family structure.

Family change and individual change are pursued simultaneously. When the dysfunctional structure is changed, it leads to changes in the positions and roles of the

family members. The changes in the family structure have caused family members to experience new circumstances in the family. They develop new perspectives that may help them find solutions to their individual problems (Minuchin & Nicols, 1993; Colapinto, 1991; Minuchin, 1974).

Assessment

In structural family therapy, assessment focuses on change more than on diagnosis. Assessment starts at the very beginning of the joining process when the therapeutic system is formed, and continues throughout the intervention while the therapist challenges the family to induce change in its structure (Colapinto, 1991).

Assessment emphasizes family interactions in its current context. Its goals are to (Minuchin, 1974):

1. Consider the family structure, its transactional patterns and alternatives.
2. Assess the family's flexibility and its capability for restructuring and change.
3. Evaluate where the family falls between the range of enmeshment and engagement.
4. Explore the sources of support and stress in the family.
5. Examine the family's developmental stage and the performance of its developmental tasks.
6. Explore how the identified client's symptoms have maintained the dysfunctional transactional patterns.

Treatment Techniques

Structural family therapy includes the joining process and the restructuring process. In this section, I will discuss the treatment techniques used in these processes.

1. Joining

To form a therapeutic system, the therapist joins with the family to establish a close bond. This bond is made to gain the family's acceptance and trust before motivating it to take on changes with the use of various structural techniques (Minuchin & Nicols, 1993). The therapist carries out this function by tuning in to clients' feelings and by responding to them in the way they speak or act (Minuchin & Nicols, 1993).

2. Restructuring

To restructure the family, Minuchin (1981) suggests three main strategies to enhance family change. Each strategy is manifested by a group of techniques, which are described as follows:

a. <u>Challenging the symptom</u>

According to SFT, symptom is a negative reaction of the family under stress. The therapist views that the symptom bearer and other family members are equally symptomatic (Minichin & Fishman, 1981). Hence, the role of the therapist is to challenge the family's definition of the symptom and the way they react to it. This challenge can be direct or indirect. The goals of the therapy are to change or reframe the family's view of the symptom, and help its members develop alternative behavioral, cognitive, and

affective responses. Treatment techniques to attain such changes include enactment, focusing, and achieving intensity (Minichin & Fishman, 1981).

"Enactment" is a therapeutic conversation where the therapist challenges the family's understanding of the symptom. Enactment includes three movements. First, the therapist observes how the members interact with each other in order to understand how the family functions. Then, the therapist decides which dysfunctional area to work on. Secondly, the therapist gets information about the family's functioning by inviting the family to discuss or re-enact the dysfunctional interaction patterns. Finally, the therapist suggests alternative transactional patterns and may ask the family to enact the suggested patterns during therapy (Minichin & Fishman, 1981).

In "focusing", the therapist selects a focus for change from the information given by the client. Then the therapist develops a treatment theme to work thoroughly on the focus area. For instance, to make a change in an enmeshed family, the therapist may focus on the family's diffused boundaries and discuss alternative transactional patterns (Minichin & Fishman, 1981).

"Achieving intensity" is a technique to help family members hear therapeutic messages so that they may change their interaction patterns (Minichin & Fishman, 1981). Methods to achieve intensity include: suggesting alternative solutions, repeating the message, changing the time in the transactional patterns, changing the distance between people, and resisting the request of a family member (Minichin & Fishman, 1981).

b. <u>Challenging the family structure</u>

The techniques of this strategy include boundary making, unbalancing and teaching complementarity. The goal of using these techniques is to help families develop alternative thinking and acting to facilitate family structural change by increasing or decreasing the proximity of their sub-systems (Minuchin & Fishman, 1981).

"Boundary making" techniques are used to regulate the boundaries of different subsystems in the family. These techniques help the family achieve the correct degree of permeability of boundaries that allow a flexible interchange of autonomy and interdependency among the subsystems (Minuchin & Fishman, 1981).

The therapist works with the rigidity or diffusion of the sub-systems to enhance the family's functioning. This may involve redrawing the boundaries. In an enmeshed family, the therapist strengthens the boundaries of the sub-systems; in a disengaged family, the therapist enhances the autonomy of the sub-systems or weakens their boundaries (Minuchin, 1974).

" Unbalancing" techniques are used to change the hierarchical relationships of the members. When the members' positions in the family hierarchy change, their perspectives will also change, enabling them to discover alternatives within all sub-systems (Minuchin & Fishman, 1981).

To change the family's hierarchical relations, the therapist affiliates with the members by "joining" with the family. The therapist suggests that the family ignore a dominant member so as to change that member's powerful position. The therapist, in the position of an expert, may also enter into a coalition against one or more family members (Minuchin & Fishman, 1981).

In "teaching complementarity", the therapist challenges the family's thinking that the problem comes from one member who can control the whole family. The therapist points out similar symptomatic transactional patterns shared by both symptom bearer and other family members, and discusses how they have made the same mistake by following the same family rules. When the family members are able to reframe their experiences, they will develop new perspectives and discover that there are other alternatives in the family system for change (Minuchin & Fishman, 1981).

c. Challenging the family's reality

The therapist challenges the family's explanation of the problems to help them develop alternative explanations. The therapy goals are to help the family change their perspectives and develop new transactional patterns. The techniques of this strategy include cognitive constructs, paradoxical interventions and emphasizing strengths (Minuchin & Fishman, 1981).

"Cognitive constructs" include "universal truths" or "family truths", which are used to challenge the family's explanation of the symptoms. Based on these truths, the therapist helps the family construct an alternative reality for family change (Minuchin & Fishman, 1981).

"Paradoxical interventions" are that the therapist uses his or her expert position to suggest that the family should do something that is the opposite from what they have been doing. This technique is suggested since it is believed that the family's solution has maintained the symptom (Minuchin & Fishman, 1981).

"Emphasizing strengths" is a technique to help the family look at its nurturing resources and supportive transactions to facilitate change (Minuchin & Fishman, 1981).

II. Solution-Focused and Narrative Therapies

Solution-focused therapy (S-FT) was first developed and described by de Shazer, Berg and their colleagues in the 1970s (Berg, 1991), whereas narrative therapy (NT) emerged in the 1980s, with White and Epston as its leading figures (Nichols & Schwartz, 1998). S-FT and NT have been receiving great recognition in family therapy since the 1980s and the 1990s respectively (Gladding, 1996). As well, they have been used widely and effectively with clients who have experienced child sexual abuse (Berg, 1991; White, 1991).

Both S-FT and NT are built on the philosophy of social construction. They share its view that the individual interacts with his or her environment and the exchange through interaction effects change on each other. NT also believes that the therapist must consider the client's social context or cultural context when providing therapy (Berg, 1991; Gladding, 1996).

Since social construction emphasizes the role of language in the production of meaning in therapy, in S-FT and NT, the therapist uses questions as a language medium in the discourse. For example, the therapist uses exceptions questions (S-FT) and unique outcome questions (NT) to co-create with clients a non-biased meaning of a particular event. In NT, the therapist helps clients make non-problematic interpretations of their stories and social contexts which have affected their thoughts, feelings and actions (Monk, Winslade, Crocket & Epston, 1997).

These therapies take the constructivist view that reality is not an objective entity, but the subjective experience of a person's observation and experience (Maturana & Varela, 1987; Simon, Stierlin, & Wynne, 1985, cited in Gladding, 1996, p.258). Clients construct their realities based on their interpretation of an event.

S-FT and NT share the assumptions of a strengths perspective. They include (De Jung & Miller, 1995; Cowger, 1994):

(a) Empowerment of clients is central to the clinical practice and clients' strengths provide the basis for empowerment.

(b) All people and environments possess strengths and resources.

(c) Focusing on clients' strengths helps the therapist avoid blaming the victim but discover how clients have managed to survive their problems.

(d) In S-FT and NT, the role of the therapist is to nourish, support and stimulate the strengths within clients, and identify accessible resources and strengths in clients' environment.

(e) Clients feel that they are in control of their own lives when they can make their own choices and decisions.

S-FT and NT are not without differences. They include (White, 1991; Dickerson & Zimmerman, 1993):

(a) NT pays some attention to the problem story whereas S-FT does not think it is necessary.

(b) NT takes a more collaborative working orientation than S-FT does. NT questions often start with "I am wondering if" so that clients are not guided directly to respond to the therapist's questions, and have more autonomy in their response. In S-FT, the therapist assumes a hierarchical position when using S-FT questions which often ask clients for a specific response. For example, the therapist may ask, "How did you cope with it?"

(c) NT helps clients understand the problem from a political perspective and challenges the dominant cultural beliefs that subjugate clients' situations. S-FT does not address a wider social context about how the political ideologies or the cultural values have an impact on clients' problems.

A. Solution-focused Therapy

Solution-focused therapy is a model of intervention in family therapy. This model takes the form of conversations (Berg, 1991). Language thus plays a very important role in the therapy, as it is the medium that constructs the meaning of dialogues between the therapist and clients (De Shazer, 1991, 1994, cited in Berg, & De Jong, 1996, p.388; Berg, & De Jong, 1996).

The therapist focuses more on building solutions and moving clients past their problems rather than addressing their problems directly (Berg & De Jong, 1996). Solutions may be defined as the positive changes in clients' perceptions, patterns of interacting, living patterns, and realities that are constructed within their frames of reference. Solutions are co-constructed with the therapist because clients' solutions are developed during the interactive conversation process of therapy (Berg & De Jong,

1996). In short, clients find exceptions to their problems and construct solutions. They experience changes through the discovery of new meanings in the discourse as the therapist uses S-FT questions to facilitate such changes (Berg & De Jong, 1996).

Treatment goals

Clients are believed to be competent enough to decide their goals and use their strengths and resources to attain such goals or "preferred" changes (De Shazer and his colleagues, cited in Berg & De Jong, 1996, p.377). Therefore, the treatment goal of the therapist is to help clients repeat successful behavioral patterns rather than stop or change their existing symptoms or problematic behavior (Berg, 1991). This goal is based on the assumption that when there is a small positive change in one part of a system (such as the family or an individual), this change can cause other positive changes in other parts of the system (Bishop, 1993; De Shazer et al., 1986).

Roles of the therapist

Berg and De Jong (1996) describe the roles of the therapist as:

(a) To focus on listening to clients' words and exploring clients' meanings, as well as using S-FT questions to facilitate the change process.

(b) To invite clients to explore and define their goals where clients decide what they want to be different in their lives and what strengths and resources are needed to achieve such goals.

(c) To affirm clients' definitions of goals, past successes, strengths and resources.

Assessment

S-FT does not emphasize that there is a necessary connection between a client's problem and its solution. The focus of the therapy is on solution-building. Assessment and its related interventions thus play a less important role in therapy (Berg & De Jong, 1996).

Assumptions of Intervention

The assumptions of intervention in S-FT include (Bishop, 1993; De Shazer et al., 1986):

- Most complaints develop and are maintained in the context of human interaction. Solutions lie in changing interactions in that context.
- Solutions can be achieved without knowing the details of the complaint.
- Clients have resources and strengths that can be used to resolve complaints.
- Change is inevitable.
- Small change is all that is necessary, and a change in one part of a system affects change in other parts of the system.
- Focus on what is possible and changeable rather than what is impossible.
- It is easier to enlarge on the existing change than to create something that does not exist.
- Rapid change or resolution of a problem is possible.
- If clients do not define it as a problem, it should not be addressed.
- The meaning of the behavior depends on the construction or interpretation of meaning by clients.

Treatment techniques

The intervention techniques of solution-focused therapy include the following (Berg, 1991; Bischof, 1993; De Jung & Miller, 1995; Berg & De Jung, 1996; Gladding, 1996):

(a) A brief description of the concern or problem in clients' words.

(b) The therapist helps clients focus on change and solution by developing goals. Goals should always be small, specific, and described in concrete and behavioral terms that clients feel it is possible to achieve.

(c) The therapist uses miracle questions to help clients set goals for change. For example, the therapist may ask, "If a miracle would happen tonight and your problem were gone, what would you notice to be different in your life?" When answering this question, clients will become aware of the "difference" and their desires to achieve such "difference". This question helps clients enter into a reality that they wish to achieve.

(d) The therapist identifies clients' strengths and resources to attain their goals.

(e) The therapist uses scaling questions to assess clients' progress. These questions enable clients to have a more concrete and definable understanding of where they are in the situation, help them set goals, and help evaluate the recovery progress. An example is, "From a scale of 0 to 10, with 0 as the lowest level of happiness, and 10 as the highest level of happiness, where are you right now?" and "After therapy, where would you like to see yourself on the scale?"

(f) The therapist explores exceptions to the problem. The therapist uses exceptions questions to ask clients about their success, or the times when problems do not occur

or are less serious. The therapist believes that when there is a small positive change or when the problem does not occur, such change or exceptions should be encouraged. Repeating exceptions forms the basis for solutions and it makes a new rule that non-problem events can recur. An example of an exceptions question is, "When was the time when your daughter was not talking back? What were you doing at that time?"

(g) The therapist uses coping questions to understand how clients cope with their overwhelming circumstances and feelings (De Jong & Miller, 1995). These questions accept clients' perceptions of their problems. When answering these questions, clients often become aware of their strengths and thus feel less helpless. An example is, "When the problem happened, how did you cope with it?"

(h) The therapist asks clients to do small tasks or assignments that are related to their goals or exceptions to the problems.

(i) The therapist asks clients to notice if there are any small positive changes or improvements. During therapy, change may occur in different dimensions of clients' various aspects of life. They include the emotional, perceptual, social and behavioral aspects. The therapist then highlights the positive changes and encourages clients to continue what they are doing successfully to build further successes or solutions.

(j) The therapist uses compliments that are written messages to acknowledge a family's strengths and their changes or improvements in the therapy. This technique is often used before giving the family a task or assignment.

(k) To close therapy, the therapist gives feedback in the form of positive comments to affirm clients' goals, strengths and success.

B. Narrative Therapy

Narrative therapy views that family members' interpretive methods of life events and meanings determine their behavior and interactions. How they ascribe the meanings to their lives contribute to how they are able to survive their problems. If their response to the problem is inappropriate, it may sustain the problem and negatively affect their lives and relationships (White & Epston, 1991).

Narrative therapy believes that people use stories (or self-narratives) to describe their lived experiences, which are their life events or past experiences of life. They plot their lived experiences into stories to make sense of their lives, to provide themselves with a sense of coherence and continuity, and to achieve a sense of purpose. All stories have a beginning (or a history), a middle (or a present) and an ending (or a future) (White & Epston, 1991; Gergen & Gergen, 1984, cited in White, 1991, p.2).

However, people do not plot every lived experience into their stories. Their preference of selection and interpretation of their lived experiences are affected by many factors, such as the society's political ideologies and cultural values. The structuring of a narrative (or story) becomes a selective process because people tend not to include events that do not fit with the dominant stories. These stories are accepted by the culture or the society to represent a "reality" that everybody believes as true. These stories shape our lives and relationships with their meanings (White & Epston, 1991).

In short, narrative therapy believes that people live their lives by stories (Kurtz & Tandy, 1995, p.177, cited in Gladding, 1988, p.266). When clients' interpretation of their stories are problematic, narrative therapy, which takes the form of a discourse, uncovers clients' alternatives and helps create new perspectives towards their lives and a preferred

story for their future. The alternative stories enable clients to develop new positive meanings in their lives and relationships, which in turn bring desired possibilities to their lives (White & Epston, 1991).

Assumptions of the problem

In narrative therapy, clients' problems are not the consequences of dysfunctional interaction patterns in the family. Instead, their problems arise from their problematic interpretation of their life stories. Their way of interpretation affects them to view and experience their lives and relationships negatively. These problematic stories are so dominant in clients' lives that the alternative stories or positive experiences, which are also part of their lived experiences, are overlooked (White & Epston, 1991).

The role of the therapist

The therapist establishes a therapeutic context in which clients are the primary authors of developing their non-problematic alternative stories. The therapist, guided by the information given by clients, is only acting as a *co-author* to facilitate such experiences. In brief, the therapist helps clients to locate, generate or find these alternative stories (White, 1988, cited in White, 1988/9, p.3).

Propositions of narrative therapy (White, 1991; Bubenzer & West, 1994)

- As human beings, we interpret and give meanings to our experiences as we live our lives.

- We have a frame of intelligence to interpret our experience and to make attribution of meaning possible.
- The meanings derived from the interpretation of our lived experiences are not neutral in their effects. These meanings shape our lives and relationships by affecting the steps we take in our lives.
- The personal story or self-narrative is the principal context of our lived experiences.
- The personal story or self-narrative is often affected by our interaction process with other people, and subjugated by the ideologies and cultural values of our society.
- The personal story or self-narrative structures our life experiences. It selects which part of our lived experiences for expression.
- Our stories shape or constitute our lives.
- We have many stories about our lives, but no single story can be free of ambiguity or contradiction.
- To solve the problems, we have to engage ourselves in the mediation of the dominant stories and the sub-stories (non-problematic alternative stories) of our lives.

Treatment goals

The goals of narrative therapy are to help clients move away from their problem stories and develop alternative stories to provide options and strategies for living (Bubenzer & West, 1994; Hodes, 1994; White, 1995, cited in Gladding, 1998, p.266).

Treatment techniques

The treatment process of narrative therapy is based on deconstruction and re-authoring (White, 1991). Deconstruction uses "procedures that subvert taken-for-granted realities and practices" (White, 1991, p.6). In NT, the therapist works with clients to separate clients from the dominant stories that have shaped their lives and relationships (White, 1988/9). This is achieved in a discourse, in which clients learn about the gaps and inconsistencies of the dominant stories and will not blindly accept their messages (Monk, Winslade, Crocket, & Epston, 1997). Re-authoring is the process of the generation and/or resurrection of alternative stories in therapy (White, 1991).

To deconstruct a problematic narrative, NT uses the following techniques:

(a) "The effects questions *of mapping the influence of the problem on persons*" look at how the problem has affected clients' perspectives, emotional states, family and peer relationships, social and work aspects. These questions are used to enhance clients' awareness and objectivity towards how the problem is affecting them (White, 1988/9, 1991; Gladding, 1998). An example of the question is, " When self-doubt attacks you, how does it get you not to trust your ideas?" (Zimmerman & Dickerson, 1996).

(b) "The effects questions *of mapping the influence of persons on the problem*" explore how clients have been able to cope with their problem. These questions enhance clients' awareness of their responses to a problem, and help them realize their strengths and potential in the situation (White, 1988/9; Gladding, 1998). An example of the question is, "Have there been times when self-doubt could have taken over, but you kept it out of your mind? How did you do that?" (Freedman & Comb, 1996).

(c) "Externalizing the problem" is a technique used to objectify the problem as a separate entity of clients or of their relationships. Sometimes, clients may personify their problem or use a metaphor to describe a problem (White, 1998/9). An example is, " How did self-doubt attack you?" This technique enables clients to feel separated from the dominant (or problematic) stories of their identity and/or relationships. They become more able to notice their positive lived experiences and develop preferred stories of what they want to be (White, 1991). Clients thus become less affected by the problem (or dominant stories) and less constrained in their perception of events that are surrounding the problem (White, 1998/9).

To facilitate the process of re-authoring, the therapist asks a variety of questions in the discourse. They include:

(a) "Unique outcome questions" are used to help clients find unique outcomes. A unique outcome refers to an aspect of lived experience that contradicts or is not part of the problem story (White, 1998/9). When unique outcomes are connected, they form a unique account which is an alternative story that carries non-problematic meanings. Clients gain a positive perspective towards their life experiences and become better able to make sense of their lives (White, 1988, cited in White, 1988/9, p.3). An example of the unique outcome questions is, "Did you have a struggle with self-doubt before you made this appointment to see me? How did you win the battle?" (Zimmerman & Dickerson, 1996).

(b) "Landscape of action questions" are used to help clients situate unique outcomes in sequences of events that unfold across time according to particular plots (White, 1991). These questions develop the structure of an alternative story, with non-

problematic events linked together to a plot in a time sequence. The questions can be in reference to the past, present and future. The therapist may explore clients' preferred behaviors and events, what led up to their preferred behaviors, and what actions clients took to prepare for a preferred event. An example is, "How did you win the battle against self-doubt?" As clients construct their alternative stories, their ability to set preferred goals for their preferred future is enhanced (White, 1991). The therapist may ask, " As you win more battles against self-doubt, how will your life be different in the future?" (Zimmerman & Dickerson, 1996).

(c) "Landscape of consciousness questions" are used to help clients reflect on and determine the meaning of those events that have occurred in the landscape of action (White, 1998/9; White, 1991). These questions help develop the structure of an alternative story by understanding clients' intentions, desires, preferences, values and beliefs, and their preferred ways of being (Zimmerman & Dickerson, 1996). An example is, " As you see yourself winning more and more battles against self-doubt, what do these victories tell you?" (Zimmerman & Dickerson, 1996).

(d) "Raising dilemma questions" raise clients' awareness of the dilemmas and how they may cope with them (Gladding, 1998). An example is, "If you think your self-doubt develops because of your accommodating to your partner, how are you going to eliminate your self-doubt if you continue to relate to him in the same manner?"

(e) "Predicting setback questions" are used to help clients predict setbacks. It is believed that setbacks are best dealt with when they are anticipated. Clients can think of some solutions beforehand so that they can be better able to handle the situations if setbacks

occur again (White, 1986, cited in Gladding, 1998, p.268). An example of these questions is, "How would you handle self-doubt if it reappears in your life?"

Other important NT techniques include the use of narrative letters as a reminder of clients about what has occurred in the therapy, and certificates as an affirmation of the defeat of a problem. In addition, celebrations are often used to bring closure to the therapy (White & Epston, 1990; Bubenzer & West, 1994; Gladding, 1996).

III. A Combined Intervention Approach of S-FT, NT, SFT

Solution-focused therapy and narrative therapy have received a lot of recognition of their effectiveness in the treatment of CSA symptoms (Berg, 1991; White, 1991). In contrast, structural family therapy seems to be less recognised of its work in this area. I used S-FT, NT, and SFT in this project because they shared many similarities, while their differences were complementing each other to meet my project clients' various needs.

A. Similarities and differences of S-FT, NT and SFT

In the following, I will describe some important similarities of S-FT, NT and SFT:

First, NT and S-FT emphasise a collaborative relationship between the therapist and clients (Gladding, 1998) while SFT stresses a joining process with clients (Minuchin & Nicols, 1993). In S-FT and NT, the relationship between the therapist and clients are more on an equal plane. Both therapies believe that clients are able to make their decisions, and find their solutions or preferred stories. In SFT, the therapist joins with the family by tuning into clients' feelings and by speaking or acting in the similar way as clients (Minuchin & Nicols, 1993). Therefore, the therapist is not so much in a position of authority.

Second, interventions of NT and S-FT focus on the present and future (Gladding, 1998). SFT takes a similar approach. For example, SFT takes the view that the individual is made up of his past and present. As the individual is the product of his past and the past is manifested in the present, the changing of the present will result in the changing of the past (Minuchin, 1974).

Third, the goals of S-FT, NT and SFT are present- and future-oriented. NT helps clients generate their preferred stories so that they can focus on working towards a more positive life. S-FT aims at achieving solutions. This enables clients not to dwell on the problems of their past. SFT emphasises developing an alternative explanation of the present symptoms to bring about changes in the family so that it can have a healthier family structure. In short, these therapies are goal-oriented, emphasise change, and share

the same purpose of eliminating the problem or moving clients away from the present problem.

Fourth, NT and S-FT maintain that all people and environments possess strengths and resources (De Jung & Miller, 1995; Coweger, 1994). SFT shares a similar view that there are positive aspects of each family, and these strengths are transmitted from the family-of-origin. As each family has its good sides as well as bad sides, family members can experience some forms of support and nurture from their family environment (Minuchin & Fishman, 1981).

Fifth, NT, S-FT and SFT highlight strengths. NT and S-FT look at the unique outcomes and exceptions respectively to help clients focus on the times when they are "free" from the identified problem. In SFT, the therapist may start therapy by identifying the strengths of the symptom bearer, and help the family look at the family resources and its nurturing and supportive transactions to facilitate change (Minuchin & Fishman, 1981).

Sixth, S-FT has a cognitive and behavioural orientation. It envisions solutions can be achieved by repeating "exceptions" or small positive changes. One of its treatment techniques suggests clients to do small, concrete tasks and/or to amplify or observe change. These tasks may include doing small tasks and/or observing small changes.

In NT, the therapist helps clients construct preferred life stories. Each story is about clients' non-problematic perspectives of life, developed from their cognitive processes. In addition, NT emphasise a cognitive process. The technique of "externalising the problem" requires clients to objectify the problem in their cognitive processes. The landscape of consciousness questions help clients be conscious of the meanings of their

unique outcomes. Dilemma questions and predicting setback questions help clients perceive in advance the possible difficulties in the future.

As well, both S-FT and NT use questions as the communication medium with clients. Both S-FT and NT involve a reflective process where clients have to think and find their own answers.

Similar to S-FT and NT, constructive process plays an important role in SFT. In SFT, one of its essential strategies is to challenge the family's reality (or explanation) of the identified member's problem. For example, the therapist may challenge the family's reality with the use of "cognitive constructs", such as "universal truths" or "family truths". This allows the family develop alternative explanations of the problem and construct an alternative reality for family change (Minuchin & Fishman, 1981).

Seventh, S-FT and SFT perceive that problems in a family are developed and maintained through family transactions. Both therapies believe that it is important to change the dysfunctional interaction patterns.

Eighth, NT and SFT view that how clients interpret the problem is very important. NT helps clients look for non-problematic accounts and develop a new perception of their lives. SFT challenges the family's explanation of the problem to help generate an alternative interpretation (Gladding, 1998; Minuchin & Fishman, 1981).

S-FT, NT and SFT have many differences. Their differences could play complementary roles to meet diverse clients' various needs. Some of these differences are:

First, SFT does not emphasise the role of the individual. It believes that the individual and his or her environment interact and create change. However, it stresses to facilitate change in the family structure, and views that the individual will change accordingly to his or her environment. Therefore, its therapy goal is to induce family change and its focus of intervention is at a wider family context rather than at an individual level. In contrast, S-FT and NT put the treatment focus on the empowerment of the individual client or dealing with family members' personal issues rather than on the family's overall structural functioning. S-FT, NT and SFT are complementary to each other as their interventions encompass both individual and family levels.

Second, SFT focuses on inducing positive changes in the restructuring of the family structure, in areas such as the family's sub-systems, boundaries, and roles. S-FT and NT do not. S-FT, NT and SFT become complementary to each other as each therapy helps to work with clients' issues arising from different sources.

Third, as mentioned earlier, S-FT, NT and SFT emphasize a collaborative relationship between the therapist and clients. However, in SFT, the therapist also acts as an expert when giving advice, when challenging the family's reality and when explaining the problem (Minuchin & Fishman, 1981). Therefore, using these three therapies does not only allow the therapist to work with clients on an equal plane to empower their coping, but also as an expert (SFT) to challenge their reality or explanation of the problem.

Fourth, S-FT and SFT do not address issues arising from the dominant culture and ideologies of the society. In contrast, NT does. In NT, the therapist asks clients how the cultural, political and social values have affected their beliefs and behaviours. For example, when discussing family violence, the therapist helps clients understand how culture has affected the family to use violence and how the problem is condoned by society. This understanding helps clients dismantle their permissive thinking of accepting violence, but develop alternative perspectives to deal with such issue.

Fifth, the use of discourse in S-FT and NT seems to de-centre therapy from the focus of "being-with" clients to the reflective process of construing reality (Sluzki, 1998). S-FT uses a sequence of questions to help clients find solutions. NT uses a reflective discourse to help clients deconstruct their problematic story and develop a preferred alternative story. It seems that the feeling part of clients is not directly or fully addressed by its techniques. In contrast, SFT emphasises the therapist to tune into clients' feelings during the joining process, which makes clients feel their feelings are directly attended.

Finally, the differences of S-FT, NT and SFT are complementary to address different learning styles of clients. For example, clients who are intellectuals may find themselves benefiting more from the discourse in S-FT or NT. Clients who emphasise feelings may find the joining process of SFT appealing to them for it addresses their feelings better.

B. Application of S-FT, NT and SFT

In this section, I will illustrate, at the intervention level, how SFT, S-FT, and NT can help pre- or early adolescents girls alleviate their CSA symptoms; and at the

preventive level, how SFT can help strengthen family resilience to prevent re-occurrence of CSA symptoms.

(1) Application of SFT in working with boundary issues

The following discussion illustrates how SFT techniques can work with the boundary issues.

In a family where each sub-system has a clear boundary, the child's boundary is in the normal range which allows her to interact with her parents but excludes her from the spousal subsystem. Therefore, the child's boundary will not be violated by another sub-system, that is, another family member (Nichols & Schwartz, 1998).

Many incestuous families have both rigid and diffused boundaries. In families where the boundaries among the family members are overly rigid, there is often little contact between each other, resulting in excessive emotional distance among the members (Nichols & Schwartz, 1998). Family members thus become disengaged in the family relationships and do not develop a strong bond with each other. This hampers the development of warmth, affection, and positive interactions in the family. Without a strong bond between the father and the daughter, the father may not have any considerations for the child's well-being. This can include his lack of understanding of how much he can hurt the child by sexually abusing her. Conversely, if the family boundaries are diffused, the members' boundaries become excessively weak and the proximity among the members is excessive (Colapinto, 1991). In these families, a father may cross the daughter's boundary with regard to sexual activity. He may involve his

daughter as a part of the spousal subsystem and play the sexual role of a husband on her (Nichols & Schwartz, 1998).

To strengthen the boundaries of the family sub-systems, structural family therapy may use the following techniques (Nicichols & Schwartz, 1998):

1. Joining and accommodating
2. Working with interaction
3. Diagnosing (Assessing)
4. Highlighting and modifying interactions
5. Boundary making
6. Unbalancing
7. Challenging the family's assumption

Children who have experienced sexual abuse may feel that their boundaries have been violated. They may lose their sense of boundaries and cannot set appropriate distance with other people. Some children may act out sexually and engage themselves in inappropriate sexual behavior with acquaintances or strangers (Briere & Elliot, 1994).

In SFT, the therapist assesses throughout the joining process and the restructuring process. For example, through the discussions on the family's boundary issues, transactional patterns, family hierarchies, family roles, and family rules, the therapist learns how the family structure may have affected the child's coping.

In the restructuring process, the therapist highlights the positive transactional patterns, and encourages the family to uphold these patterns while extending them to other interactions. The therapist proposes alternative interaction patterns to replace the

dysfunctional patterns to facilitate family change. With healthy family interactions, the family becomes a healthier environment for the child to grow.

The therapist discusses the boundary issues, such as rigid and/or diffused boundaries versus clear boundaries in the family. The therapist works with the family to establish clear boundaries among each family sub-system so that the child can feel she has a greater control over her boundaries. This may enable the child not to sexually act out and thus protect her from further sexual abuse.

The therapist may need to take sides (unbalancing) with the child so that the child has the courage to discuss her boundary issues with the non-offending mother. As well, the therapist challenges the family members' assumptions of the child's CSA symptoms, and helps the family develop an alternative perspective that the responsibility of abuse should be placed on the perpetrator. This explanation enables the family to realize that the abuse is not the child's fault, and may enhance the family support and the child's coping with her post-traumatic stress.

To note, the application of SFT is not required to follow a particular sequence of steps, because every family has distinct problems and needs that some of the suggested techniques may not be applicable or are better used in a different sequence of intervention.

(2) Application of S-FT in alleviating flashbacks

In S-FT, the treatment techniques include the use of miracle questions, exceptions questions, scaling questions, coping questions, compliments, and giving small tasks or

assignments (De Jong & Miller, 1995; Gladding, 1996). Here, I will illustrate how the mentioned techniques can be used to alleviate flashbacks.

In S-FT, the therapist will not explore the details of the problem. Instead, the therapist listens to what the child wants to disclose. Then, the therapist asks a miracle question to help the child set her therapeutic goals. For example, the therapist may ask, "How would your life be different if a miracle happened and you had no more flashbacks?" The child specifies how things can be different once flashbacks no longer exist. The therapist asks a scaling question to assess where the child is at and the extent of changes she wants to make. The therapist may ask, " From a flashback scale of 0 to 10, where 0 means "not disturbed" and 10 means "very disturbed", how would you describe your situation right now?" and "As a result of therapy, how would you like to see yourself improve on the flashback scale?"

The therapist identifies the child's strengths, such as her courage, to help her feel more powerful in her coping. The therapist also discusses the child's family support and peer support so that the child knows that she is not alone dealing with her flashbacks.

To help the child find "exceptions" to having flashbacks, the therapist may ask, "Were there times that flashbacks did not come back? What were you doing when flashbacks did not come back?" Maybe "exceptions" happened when the child was engaging in healthy extra-curricular activities and when she was not alone. Therefore, the therapist could recommend the family to help the child participate in similar activities to increase "exceptions".

The therapist may also ask the child, "How would you cope with your flashbacks if they come back?" The therapist and the child can think of a solution. For example, if

flashbacks come back, the child could think of someone who truly loves her (or some positive experiences). Maybe when having a positive thought, the child will feel that she has more control over her life and the awful memories from her sexual abuse will diminish. If it works, the therapist will encourage the child to continue to use this strategy as a coping method.

The therapist sends the family a letter of compliment to highlight the child's strengths and improvements.

The therapist gives the child a task. For example, the therapist asks the child to record the frequency of her flashbacks when she is at home, at school or with peers. As well, the child is asked to notice the changes, including the small improvements.

To understand the child's progress, the therapist asks the child a scaling question to assess where the child is at on the flashback scale. The therapist praises the child's improvement and encourages her to continue what she is doing successfully.

Finally, to close therapy, the therapist asks the child where she is at on the flashback scale, and see if she has achieved her goal for improvement. The therapist gives feedback on the child's progress, and affirms the child's strengths and her success in alleviating flashbacks.

(3) Application of NT in alleviating depression

In NT, the therapist helps the child move away from the symptom by externalizing the symptom, by finding the unique outcomes, and by developing a *preferred* alternative story. In the following, I am going to illustrate how NT may help alleviate depression.

The therapist first helps the child express her feelings of the day to help prepare her discuss other feelings from her sexual abuse. To work with depression, the therapist explains what depression means. In the deconstruction process, the therapist explains to the child how and why to use the "externalizing the problem" technique. The child learns how to name "depression" with a metaphor. For example, the child may name "depression" as "Low" so that she feels that "Low" is a separate entity which is not part of her. The therapist maps how "Low" is affecting the child. The therapist may ask, "How does "Low" affect the different areas in your life? For example, your family relationships, peer relationships or school life." So, the child can become aware that how "Low" has affected her life. To enhance the child's awareness of how she has affected "Low" and has control over "Low" some of the times, the therapist may ask, " Have you ever tried to make "Low" smaller and controllable? How did you do it?"

In the re-authoring process, the therapist and the child develop a preferred alternative story that "Low" will not occur or will become less prevalent in her life. To explore if there are any unique outcomes, the therapist asks, "Were there times that when "Low" occurred, you had overcome it? What did you do to gain such success?" The child talks about her positive experiences of overcoming "Low". Then, the therapist engages the child to look for series of successful incidents about living without "Low", and how she has managed to get "Low" out of her life in those incidents. To explore the meanings of those positive preferred life events when "Low" did not occur in her life, the therapist asks, "How did you feel when "Low" did not occur? What did these victories tell you?" To help the child set goals and prepare for actions to reach those goals, the

therapist may ask, "How do you want your future to be different?" and " What steps will you take to achieve a life without "Low" or with less "Low?""

The therapist raises dilemmas to help the child be aware of such possibilities and develop coping methods. The therapist may ask, "How are you going to handle it if "Low" sometimes disappears, sometimes suddenly attacks you, and sometimes quiets down again?" The therapist also helps the child predict setbacks. For example, the therapist asks, "How would you help yourself if "Low" suddenly returns?" The discussions on dilemmas and predicting setbacks help the child be better psychologically prepared for predicted difficulties.

As well, the therapist sends a narrative letter to the family to highlight the child's learning. The therapist presents the family a certificate to affirm the family of the defeat of "Low", and holds a party to celebrate the achievement of goals to bring closure to the therapy.

To comment, I feel that S-FT and NT have made clients feel very accepted. Both therapies do not only emphasize clients' strengths, supports and resources, but also move clients away from their past and help them focus on the solutions or a preferred future. On the other hand, SFT helps to deal with family transactional problems that S-FT and NT do not address. Each therapy is distinctive in its treatment process and has its special way to work effectively with particular CSA symptoms. The foregoing illustrations, however, have not included many other factors which may also have affected the child's recovery progress, as they are not my focus of discussion.

(4) Application of SFT in enhancing family resilience

To prevent the re-occurrence of CSA symptoms, structural family therapy can be used as a subsequent step of intervention to strengthen family resilience.

To enhance family resilience, the therapist helps the family: (a) develop a positive parent-child relationship, (b) cultivate a warm and supportive home environment, (c) enforce family rules with consistency and love, and (d) clearly define the roles of parents and children (Canino & Spurlock, 1994, cited in Sayger, 1996, p.2).

a. Develop a positive parent-child relationship

SFT enhances the parent-child relationship by improving their communication. In some incestuous families, especially during the initial stage of disclosure, the mother may still be in love with the ex-partner, the abuser. The child may feel afraid to express her feelings and speak against the abuser. The therapist can side with the child to be supportive of her and help her explain her feelings to her mother. As well, the therapist may use SFT techniques, such as "universal truths" to challenge the mother's view of who is to blame in her daughter's abuse. If the mother is able to put the responsibility on her ex-partner, the child will feel that the mother trusts her and protects her, and become better able to relate to her mother.

b. Develop a warm and supportive home environment

Children cope well in a strong supportive family environment. In some families, some mothers do not spend time with their children, but they leave their children to the care of other family members, the school or the therapist. In therapy, the therapist helps

the mother realize that no one can replace her parental role and discusses parenting skills to enhance the mother's parenting.

The therapist uses SFT to facilitate the parent-child communication so that the mother can understand her child better. The therapist intensifies the child's message to make sure that the mother hears what the child needs. The therapist also suggests how the mother could be supportive of her child, and help her cope with her trauma, her developmental tasks and her daily life issues. When there are more positive interactions and their relationship improves, the child feels that there is more support from her family, and becomes happier and has less adjustment difficulties.

(c) Enforce family rules with consistency and love

In a family where the mother has become involved in a new relationship too soon, the child may experience difficulties in coping with the changes in the family brought about by the mother's new partner (Gladding, 1998). The changes and adjustments in a newly formed family may further stress the child while she is coping with her trauma. Very often, in a new stepfamily, the child may resent parenting or enforcement of parenting rules by the mother's new partner (Gladding, 1998). The child may feel that her mother's new partner is an outsider and has no right to parent her. She may also feel that his parenting is not based on love and lacks consistency. The mother may be in a dilemma at who to take sides with. If the mother sides with her partner, the mother-daughter relationship will be adversely affected.

In such situation, SFT provides a framework which helps the family understand how the new family structure, their interactions and the enforcement of family rules have

maintained the conflicts between the child and her parents. The therapist challenges the mother's reality that parenting by her partner is implemented too soon and it lacks consistency and love. The therapist suggests solutions such as that parenting should not be drastic but consistent with warmth and reason (Gladding, 1998).

(d) Clearly define the roles of parents and children

SFT can be used to help both mother and child to clearly define the family roles of each family member. The child can voice her discontent about carrying out particular family roles. The mother explains to the child her point of view to justify the child's responsibilities in the family. Both mother and child discuss solutions to the problem. When the child has developed an understanding about the family roles and chores arrangements, her coping with CSA trauma will be less likely affected by these issues.

Summary

Chapter one reviews the literature and theories that explain the occurrence of child sexual abuse and its impacts on the child and the non-offending mother. Research studies used for this chapter indicate that effective interventions could help the child victim understand the CSA issue and its prevention, resolve symptoms, and develop preferred goals and preferred life events. These studies also suggest that interventions at a preventive level should include enhancing the family's resilience and helping the non-offending parent cope with the child's trauma. Chapters two and three introduce

individual, dyadic, family, and group therapies as treatment modalities and solution-focused, narrative, and structural family therapies as treatment techniques.

In these three chapters, there are some common themes. First, the developmental issues of the child should not be overlooked when planning intervention. Secondly, therapies have gradually moved away from treating only the CSA symptoms of the child into a more preventive treatment mode. Finally, enhancing social support and family resilience have become increasingly important in the child's treatment.

Chapter 4

The Practicum Overview and Evaluation Methods

I. The Practicum Overview and Clients' Profile Information

This section describes the settings, recruitment processes, time frames, procedures and clients' profiles during my practicum at Elizabeth Hill Counseling Centre (EHCC) and the Family Centre.

The settings

From March, 2001 to early January, 2002, the first phase of my practicum was conducted at Elizabeth Hill Counseling Centre (EHCC) to work with CSA families. EHCC is a counseling centre run by the Faculty of Social Work, the University of Manitoba. It provides training and supervision to students of the Social Work Faculty. It is situated at 321 McDermot Avenue, in the inner city of Winnipeg. EHCC is divided into three divisions: the Family Therapy Department; the Children and Family Department; and the Men Resource Centre. EHCC is committed to serve inner-city families, children and men. Therapy is provided on a no-charge basis. Clients are often self-referred or referred by other community agencies.

The second phase of the practicum started in December, 01 and was completed in May, 01. It was conducted at the Family Centre of Winnipeg. In this phase of my practicum, I worked with families whose primary issue was parenting. The Family Centre is located at Portage Place, 401-393 Portage Avenue. Its mission is to support and

strengthen Winnipeg families through services and advocacy. It has four main programs: Counseling and Community Services Program, In-home Family Support/Family Education Counseling Programs, Special Needs and Family Child-Care Program, and Employee Assistance Program. I worked within the Counseling and Community Services Program to complete this part of the practicum.

Recruitment processes

In my first phase of practicum at EHCC, I recruited all my clients from other social services agencies and schools; and one of them was referred by a community friend who heard about our project from the Child and Family Services (C/FS). The time for the recruitment was approximately six months, beginning in early March, 2001 and ending in early September, 2001.

To recruit clients, I faxed and mailed program outlines, posters and related information to different organizations: (1) over 30 social services agencies and hospitals in Winnipeg, (2) Winnipeg School Division No. 1, its elementary schools and junior high schools, (3) radio stations which included CBC Radio and other radio stations, and (4) newspapers such as Winnipeg Free Press and Community Review.

I also contacted the directors and/or supervisors of the social agencies, and the school counselors of Winnipeg Division No.1 by telephone. Through telephone discussions, they asked me questions about the project and we discussed the possibilities of referrals directly.

I contacted the abuse coordinator of C/FS Broadway Office about this project. The abuse coordinator introduced this project in her meetings to the supervisors of other

C/FS offices. I also talked to a member of the Child Abuse Committee about my project and the need for referrals. She helped me arrange with the Communication Office of C/FS to have a e-mail sent to all C/FS staff with the information about my project. Later, the Communication Officer also sent other e-mails with updated information on this project.

As well, I visited some social agencies and school counselors to present my project and to respond to their questions. I talked to the contact persons of CBC Radio and the Community Review about this project. They were very helpful and advertised this project. CBC Radio agreed to give a special highlight on this project when the groups were ready to run. However, as the project was not part of any programs of EHCC, I was advised by my faculty supervisor not to proceed, as EHCC did not have the resources to continue the program once I had completed my practicum.

Finally, to promote the public awareness of the CSA issue in the inner city community and to recruit potential clients for my project, I contacted the director of Research Planning & Technology to discuss my request to do presentations in the schools of Winnipeg School Division No.1. After I was given the director's permission, I contacted the Division's Junior High school counselors for their schools' permission.

I believed that there were many sexually abused children, who had not received any treatment from the social agencies or from the private practice, were still struggling on their own to cope with their trauma. Almost all of the sexually abused children of school-going age were attending schools. Therefore, to do a thorough recruitment, I felt it was necessary to look to the schools where these children would be attending.

The criteria for referrals:

- Pre- and early adolescent girls, aged 11 to 13, who experienced child sexual abuse such as inappropriate touching, exposure, and penetration.
- The perpetrator could be a father, a stepfather, an extended family member, or a surrogate parent figure (such as the mother's boyfriend who lived with the family).
- It was preferred that the girl lived with her parent or caregiver (such as a foster parent, an adopted parent, or a relative). However, if the girl and her parent lived apart, they might still be considered as potential group members.
- The girl was safe from further abuse from her perpetrator.
- Children who had previously received treatment were also welcome to participate in this project if they were assessed to have such need.
- The parent, the caregiver, or C/FS had the legal custody of the girl.

In the summer of 2001, after consulting with some supervisors of C/FS about recruitment possibilities, I was advised to change the criteria of age for recruitment. I extended the age range of clients to 8 to 14 years old (8-11 years old was the age range of the Children's Group, 12-14 years old was the age range of the Adolescents' Group). As well, I was advised that most of these parents would not be able to attend group due to their personal issues or family chores. Therefore, the Parent's Group became an optional plan.

At the end of my recruitment process, I found that all the children recruited fell between the age range of 11-13 years old. I therefore switched back to my original plan to run an 11-13 years old Children's Group. There were not enough parents to participate in the Parent's Group. As a result, the Parent's Group was canceled.

Presentation

One of my learning goals was to develop my social work experience at the community level. To achieve this goal, I made a specific effort to give presentations at schools to promote the awareness of the CSA issue as well as to recruit potential group members in the community.

The presentation contents included a discussion of the definitions of child sexual abuse, its myths, its statistics (including a discussion on the issue of under-reporting). We also discussed why child sexual abuse occurred, why some parents did not stop the abuse when they knew about it, the CSA symptoms, the safety plans, and ways to help other children who had been sexually abused. The presentation involved playing games, group discussions and class discussions. The students expressed their thoughts very well when using the interactive approach mentioned above.

In the schools, I noticed that some children were reacting differently and were not able to look at me when I discussed the CSA issues with the class. After class, I talked to some of these students. In one school, a grade 7 boy disclosed that his sister and he had been inappropriately touched by an uncle. The grade 8 or 9 children I talked to did not admit nor deny if they had experienced sexual abuse. But, they promised to seek help. They seemed to worry if their peers might know it and were cautious to look around when talking to me. I informed the counselors about these students so that the counselors could talk to them and follow up the cases.

Although there were some potential clients in schools, I found it difficult to recruit children for my project. The reasons were:

(1) Some schools I visited had their own sexual abuse programs or workshops.

(2) A counselor informed me that, at the Junior High level, if the child did not admit he or she had been sexually abused, the counselor would not call the child's parent to discuss the issue. The counselor could only pay special attention to the child's general behavior and needs at school.

(3) Children were seeking identity and acceptance from their peers. They worried their peers would not accept them if they revealed their sexual abuse. This was particularly noticeable among the grades 8 and 9 students I talked to.

(4) The school counselors were very cautious in their referrals. As this project was only a student project and the treatment issue of child sexual abuse was highly sensitive, I observed that the school counselors were very careful as they got to know the group facilitator and the details of this project.

To conclude, in this recruitment process, I received seven referrals from C/FS, five referrals from the schools of Winnipeg Division No.1 and one referral from a community friend. Two potential clients were referred by both their workers and school counselors. Therefore, there were a total of eleven referrals. Among these eleven cases, there were only six children participated in this project. Two referrals did not work out because the families did not have a telephone and I had lost contact with the potential clients. In some situations, the mother and/or the child was not ready for joining the project. In one case, it seemed that the mother did not have confidence in this student project and had failed to show up for many appointments. In another situation, an adolescent client missed her taxi arranged by her worker and later we lost contact. Another referred case indicated that the mother and her ex-partner would be negotiating

the custody right of the child in the near future. So, the case was not eligible as we hoped to work with a child living in a stable family environment.

In the following, a profile of my recruitment contacts is provided in table 4.1. The table does not include my contact with the mass media.

Table 4.1: Profile of recruitment contacts with schools and social agencies

	C/FS Offices (Teams)	C/FS Offices	Other social agencies	A community friend	Elementary schools & Winnipeg School Division 1	Schools for presenta-tion or meeting with the counselors	Total
No. of visits	4	3 (Supervisors)	8	0	5	6	26
Approxi-mate no. of phone contacts	8	30	80	2	48	12	180
Potential clients referred	0	7 (5 from C/FS offices visited, 2 from C/FS offices not visited)	0	1	4 (2 over-lapped with C/FS referrals)	1	11
Clients recruited	0	2	0	1	3 (1 over-lapped with C/FS referrals)	1	6

In the second phase of my practicum at the Family Centre, all my clients were self-referred to the agency for individual or family therapy. Clients of this portion of my practicum were either selected from the clients' waiting list or referred by the intake coordinator of this Centre.

Change of Practicum schedule

As this project was time-limited, my initial treatment intervention plan was to use parallel groups as the only treatment modality for sexually abused children and their mothers. Difficulty in recruitment of group members, however, caused the postponement of the groups. As well, most of the families I contacted had summer plans and they thought that the fall would be a better time for the group.

To meet different families' needs and expand the time for recruitment, I was advised by my faculty supervisor to postpone the groups that were to have been scheduled in summer, 2001 to September, 2001. As a result, I changed the original treatment modality into a mixed treatment modality, which included individual, dyadic, family, and group therapies. During the interim, from May to June, 2001, I provided individual therapy at clients' homes or at their schools it they could not attend therapy at EHCC. Meanwhile, throughout May to October, 2001, I provided individual, dyadic, and family therapies at EHCC and paid home visits to these clients' families.

Time frame

The practicum started in March, 2001 when I began the recruitment of clients at EHCC. Since May, 2001, I provided individual, dyadic, and family therapies for

potential clients. All family therapy sessions were completed by late October, 2001. The Children's Group started in late September, 2001 and it ended in early November, 2001. I completed all the thorough case recordings and termination reports required by the agency in early January, 2002. Meanwhile, I started another phase of my practicum at the Family Centre in December, 2001. My last therapy session with clients was conducted in May, 2002.

Procedures

Before therapy, clients filled out consent forms for the agency and for this project. The consent forms were basically about clients' agreement to participate in the project and confidentiality of clients would be respected. However, full confidentiality would not be guaranteed in some situations, such as re-occurrence of sexual abuse would have to be reported in order to protect the child. Clients were asked to do pre-tests and post-tests before and after treatment.

For each family case at EHCC, I wrote thorough intake reports, intervention and analysis of each therapy session and termination reports. Due to the fact that the children were very skeptical about the camera in the therapy room, the family therapy sessions were not taped. Moreover, it took time to establish a trusting relationship with children who experienced child sexual abuse. The children were not ready to be taped when discussing such a sensitive topic. However, the families agreed that group sessions would be taped, as they believed that children would have got used to therapy by that time.

The same procedures were applied at the Family Centre, except that I was required to write a brief summary of each interview with clients, and all the family sessions were to be videotaped.

Clients

In my first phase of practicum at EHCC, I worked with six families referred by C/FS, schools and a community friend. There were 5 Metis girls and 1 Aboriginal girl. Their age ranged from 9 to 14 years old. Their major problem was related to their sexual abuse and its symptoms. All the children lived with their mothers. All the families except one were single-parent families, with three families having more than one child. The age range of the mothers was between 28 and 40 years old. Five of the families have a Metis ethnic background whereas one family had an Aboriginal background.

All the children experienced inappropriate touching in their sexual abuse. Their age of abuse ranged from less than 3 years old to 8 years old. The length of abuse ranged from ten minutes to three years. The perpetrator was a member of the family or of the extended family. He was a natural father, stepfather, uncle, cousin or grandfather. Finally, four children experienced repeated sexual abuse whereas two children experienced a one time sexual abuse.

Three of the six children mentioned had previously received CSA treatment from other resources. At the entry of this project, all of them were experiencing post-traumatic stress as a result of their sexual abuse.

The number of intervention sessions depended on clients' needs and their availability. According to the project data, therapy sessions at the agency varied from 3 to 19 sessions. School visits for clients varied from 0 to 6 visits, and home visits for clients varied from 0 to 4 times. Each therapy session varied from half an hour to four hours. The half an hour session occurred because I was suddenly not feeling well when I was conducting the session at the agency. The four hours session was a home visit where

the mother asked me to stay longer when telling her child sexual abuse and unresolved issues about her husband's death. Usually, the average time for each family session was between 2 to 2 and 1/2 hours at the agency.

In the following, tables 4.2, 4.3 describe clients' profiles whereas table 4.4 describes a profile of intervention at EHCC.

Table 4.2: Profile of child clients at EHCC

Family	A	B	C	I	J	K
Age at the entry of therapy	11	12	11	14	11	9
Family composition	Single-parent family, 1 child	Mother (pregnant) & her partner, grand-parents	Single-parent family, 1 child	Single-parent family, sister, 8 years old, brother, 7 years old	Single-parent family (widowed), Sister, 13 years old	Single-parent family,1 child
Ethnic background	Metis	Metis	Metis	Aboriginal	Metis	Metis
Previous treatment	No	No	Yes	Yes	No	Yes
Source of referral	C/FS School	C/FS	School	School	School	A community friend
Age of abuse	7 (6)	8	3(not too sure)	5	9	Less than 3
Repeated/ or one time	repeated (one time)	repeated	repeated	repeated	one-time	one-time
Age of disclosure	11	12	5	5	9	3
Type of abuse	Inappro-priate touching	Inappro-priate touching	Inappro-priate touching	Inappro-priate touching	Inappro-priate touching	Inappro-priate touching
Approximate length of abuse	3 years (in a bath)	3 years	Don't know	2 years	10 minutes	Not sure
Perpetrator	Step-father (half-brother)	step-father of Family A	Natural father	Mother's Common-law	Mother's cousin	grandfather

Table 4.3: Profile of parent clients (mothers) at EHCC

Family	A	B	C	I	J	K
Age at the entry of therapy	30	28	35	38	37	40
Ethnic background	Metis	Metis	Metis	Aboriginal	Metis	Metis
CSA experience	Yes	Yes	Yes	Yes (admitted but not discussed further)	Yes	Yes
Previous treatment	No	No (not with CSA but with depression & other issues)	Yes		No	Yes
Age of abuse	7	6	5		5	7
Repeated/ or one time	repeated	repeated	repeated		repeated	repeated
Age of disclosure	18	16 or 17	(No information given)		9	Didn't tell anyone. Mother found out when she was 12
Type of abuse	inappropriate touching	inappropriate touching	At least inappropriate touching		rape	rape inappropriate touching
Approximate length of abuse	4 years	1 year	5 years		6 years	5 years
Perpetrator	Cousin neighbor	Cousin Uncle Friend's father	Natural father		Mother's partners and friends, uncle	Natural father, 2 uncles

Table 4.4: Profile of intervention at EHCC

Family	A	B	C	I	J	K	**Total**
No. of sessions at agency	19	10	3	0	0	3	**35**
No. of home visits/Time	1 (1/2 hr)	4 (6 hrs)	4 4 &1/2 hrs)	2 (4 hrs)	1 (4 hrs)	0 (0 hrs)	**12 (19 hrs)**
No. of group sessions (with 1 session repeated)	5	4	4	0	0	0	**4**
No. of school visits	1	0	1	5	6	0	**13**
Approx. no. of TC (clients)	14	28	13	14	15	3	**87**
Approx. no. of TC (agencies /or schools)	4	4	1	8	12	0	**29**
No. of agency visits	0	1	1	0	0	0	**2**
No. of letters to social agencies (re: gas reimbursement or bus tickets)	1	0	0	0	1	0	**2**
No. of letters used to encourage clients/ family	4	3	4	1	2	0	**14**
No. of cards used to encourage clients/family	4	3	4	1	1	0	**13**
No. of articles for mothers	1	1	1	0	0	0	**3**
Approx. average time per ind/or family session	2 hrs 15 min	2 hrs 15 min	1.6 hrs	1 hr	1 hr 40 min	2 hrs	**95.27 hrs**
Approx. average time per group session (included 26 min supper)	2.08 hrs	2.33 hrs	2.06 hrs	0	0	0	**10.41 hrs**
Length of therapy	6 and ½ months	8 months	4 months	7 weeks	1 month	3 weeks	**8 months**

In the second phase of my praticum at the Family Centre, I worked with five self-referred families. There were two other families who withdrew from the project after the first interview. Of these two families, the mother of one family preferred individual therapy to family therapy as the focus of intervention. She did not feel the project could meet her needs as this project placed an emphasis on working with parenting issues. In another family, I paid a home visit to the mother and her three children. The family agreed to participate in family therapy to deal with the impacts of family violence as well as parenting issues. However, I was later informed that the father was released from the jail and had returned home, and the family no longer required our service.

In the five actual families I worked with, their ethnic backgrounds were Aboriginal and Caucasian. All families were single-parent families with all but two having the mother as the head of the family.

The children ranged from 5 to 13 years old at the point of entry into therapy. Except the child of Family U, who had experienced inappropriate touching by the daughter of her father's girlfriend, these children were without CSA experience. The father of Family S was suspicious that his daughter might have experienced some forms of abuse, but he was not sure if it included child sexual abuse.

The parents' age ranged from 23 to 44 years old. Three of the parents had been sexually abused as a child. All parents had parenting issues, but parents of Families S, T, U, and V had some personal issues that they wanted to deal with during therapy.

The therapy sessions of these families varied from 6 to 8 sessions. Home visits varied from 0 to 2 times according to clients' needs and requests. All therapy was

conducted at the agency. The time of therapy sessions varied from 45 minutes of Family S to three hours of Families U and V.

In the following, tables 4.5, 4.6 describe clients' profiles and table 4.7 describes a profile of intervention at the Family Centre.

Table 4.5: Profile of child clients at the Family Centre

Family	R	S	T	U	V
Age at the entry of therapy	5	5	(Not directly worked with children)	13	9
Ethnic Background	Caucasian	Aboriginal	Aboriginal	Caucasian	Caucasian
Family composition	Single-parent family (mother), Sister, 2 years old	Single-parent family(father), 1 child	Single-parent (mother), 1st son, 20years old;2nd son,18 years old; 3rd son,5 years old	Single-parent family (father), half-sister, 19 years old	Single-parent family (mother),3 brothers, 17, 8 and 6 years old; 1 sister, 1 year old
CSA experience	No	Not sure	No	Yes (inappropriate touching)	No
Presenting issue	• Sibling rivalry	• The loss of mother	• Second son being idle at home	• Peer issues • Relation-ship with her father and mother who were separated	• Behavioral problems • Parents' separation

Table 4.6: Profile of parent clients at the Family Centre

Family	R	S	T	U	V
Age of the entry of therapy	23	44	38	41	38
Source of referral	Self-referral	Self-referral	Self-referral	Self-referral	Self-referral
Ethnic background	Caucasian	Aboriginal	Aboriginal	Caucasian	Caucasian
CSA experience	No	Yes (inappropriate touching, intercourse)	Yes (inappropriate touching)	Yes ("everything")	No
Presenting issue	• Parenting	• Coping with separation • Parenting • Dealing with the past	• Relation-Ship with boyfriend • Parenting • Panic attacks • Family violence	• Parenting • His child sexual abuse	• Parenting • Coping with divorce • Relation-ships

Table 4.7: Profile of intervention at the Family Centre

Family	R	S	T	U	V	**Total**
No. of sessions at agency	6	8	6	7	8	**34**
No. of home visits/Time	1 (1.5 hrs)	0	0	1 (2 hrs)	2 (1 hr 45 min)	**4 (5.25 hrs)**
Approx. no. of TC (clients)	28	18	12	5	16	**79**
Approx. no. of TC (agencies /schools)	0	0	0	2	2	**4**
No. of letters to social agencies (bus tickets)	0	0	0	0	1	**1**
No. of letters used to encourage clients/family	1	1	0	1	1	**4**
No. of cards used to encourage clients/family	1	5	4	4	3	**17**
No. of articles for parents and /or children	4	3	4	8	5	**24**
Approximate time per average therapy session	1.38 hrs	1.3 hrs	1.2 hrs	2 hrs	2 .5 hrs	**60 hrs**
Length of therapy	3 months & 3 weeks	2 months	3 months	7 & 1/2 weeks	10 weeks	**3 months & 3 weeks**

II. Methods of Evaluation

In my practicum at EHCC and the Family Centre, clients' progress was assessed through the use of observational methods, telephone contacts, self-rating scales, weekly logs (only for group), and a Client Satisfaction Questionnaire (CSQ). At the Family Centre, the families filled out an additional feedback form to assess the usefulness of the resources used in the project.

The observation methods included observing clients' verbal and non-verbal behaviours, their understanding of the topic through their sharing and discussion, the way they participate in the program activities, their comfort level, and how they interact with other group members.

During the period of intervention, the therapist telephoned the families to understand their coping and therapeutic progress, as well as to provide support through giving encouragement to clients.

The weekly log of each group session evaluates the group program, the interaction level, and the comfort level of clients in the group. The Client Satisfaction Questionnaire allows clients to evaluate the overall service of the project.

The self-rating scales for children were Impact Event Scale (IES), Rosenberg Self-esteem Scale (RSE), and Depression and Self-Rating Scale (DSRS). The self-rating scales for parents were Beck Depression Inventory (BDI) and Index of Self-esteem (ISE).

The RSE and ISE were used to measure children and parents' self-esteem respectively. The DSRS measured children's depression while the BDI measured parents' depression. The IES was used to measure children's distress related to their child sexual abuse or other traumatic events.

At EHCC, the self-rating scales were to be administered to clients in the first family session before the therapy started and in the last family session after the therapy was completed.

For the Children's Group, I planned that each kind of self-rating scales for both parent and child were to be applied in the first group session before the group started and in the last group session after therapy was completed.

At the Family Centre, the same procedures of evaluations for individual, dyadic, and family therapies were applied. The families were asked to fill out the pre-tests in the first family session and the post-tests in the last family session.

The mentioned self-rating scales were chosen for children and their parents mainly because they measured the things the project wanted to measure. They were the levels of self-esteem, depression, flashbacks and/or memories of traumatic incidents of children; and the levels of depression and self-esteem of parents. The data of the pre-tests and the post-tests of clients were compared. The difference or the change would indicate clients' therapeutic progress. These self-rating scales were used also because they allowed clients to understand their psycho-emotional states when interpreting their scores.

These self-rating scales may not reflect children's real psycho-emotional states. According to Birleson (1980), children may not answer honestly and reliably. It is also not certain if they would describe their feelings and behaviour in exactly the same terms used by the adults who set the scales. Research indicates that children, who are over 7 years of age, have a cognitive capacity to make judgement about their feelings and behaviour (Piaget, 1954, cited in Birleson, 1980, p.76). However, children may not score

each test item correctly if they have reading difficulties or if they write their tests at home by themselves without guidance in how to write these tests.

The accuracy of adult scores can be affected by many factors. For example, the accuracy of the scores depends on if clients are motivated to accurately reflect their emotional status (Beck, 1985, cited in Stehouwer, 1987, p.28). They may not write the true scores when they feel they are involuntarily committed to do the test. Some clients may try to achieve competency when they have to gain social acceptance, to stand trial, or to attend court custody hearing (Carlson, 1996, cited in Impara & Plake, 1998. P.119). Moreover, clients' perspectives towards life, their levels of pessimism and optimism, and their life experiences may have affected how they score the test items.

A. Self-rating scales for children

(1) Rosenberg Self-esteem Questionnaire (RSE)

The RSE measures self-esteem on a four-point scale which represents four response categories. They are: 1 indicates "strongly agree", 2 indicates "agree", 3 indicates "disagree" and 4 indicates "strongly disagree".

The RSE is a scale of ten items, which is divided into five positive self-esteem items and five negative self-esteem items. The positive self-esteem items are 1, 3, 4, 7, 10. The negative self-esteem items are 2, 5, 6, 8, 9.

The range of scores is between 10 and 40. The mean is 25. After reversing the negative scores, the sum of scores of the ten items indicates that the lower the scores, the better will be the self-esteem. The RSE does not have a cutting score. As many self-

rating scales have their cutting scores below the median, such as the DSRS and the ISE, I surmise that the median score of RSE may indicate a level of poor self-esteem.

The RSE is culturally sensitive. It has been used with large research samples of high school students and people who are of various ages and had varied ethnic backgrounds.

In addition, it has a high reliability of .92, which indicates that it has an excellent internal consistency, and a good concurrent, predictive and construct validity (Rosenberg, 1979, cited in Corcoran & Fischer, 2000, p.610).

Finally, the RSE items clearly tap the global self-esteem. These items evaluate the overall self-satisfaction and worthiness of a client. They do not emphasise self-evaluation along specific dimensions, such as scholastic competence, athletic competence, social acceptance, physical appearance and behavioural conduct (Hoyle et al., 1999).

I chose RSE as a self-evaluation scale for my child clients because it measured the self-worth of the children. Since the scale has only 10 items and there are only four response categories, it is easy for children to understand how to score and it saves time reading.

(2) Depression Self-rating Scale (DSRS)

The DSRS measures the extent and severity of depression in children between the ages of 7 and 13 years old. It is a scale of 18 items, developed from its original scale of 37 items (Birleson, 1980).

The 18 items scale has three response categories for each item. The response categories with a score rating varied from 1 to 3, with 1 meaning "Most of the time", 2 meaning "Sometimes", and 3 meaning "Never".

This scale includes 10 positively worded items and 8 negatively worded items. Such arrangement helps to avoid bias in the response. The positive worded items are: 1,2,4,7,8,9,11,12,13,16. The negative worded items are: 3,5,6,10,14,15,17,18. The 18 items are not strongly associated with a diagnosis of depression, but are more closely associated with mood, physiological and somatic complaints, and cognitive aspects of depression (Birleson, 1980). To illustrate, half of the items resemble the criteria used in the selection of depression group, but the other half of the items are not directly correlated with the criteria used in the operational definition of depressive disorder in childhood (Birleson, 1980).

The scale is culturally sensitive and mostly used with smaller samples. It had a good reliability of .86 and .73 in two studies, each had less than 100 subjects who had different ethnic backgrounds and came from a wide range of socio-economic levels. In these studies, it also had a good current validity and factorial validity.

The range of scores of this scale is 0 to 36. It has a rough cutting score of 13. This score is used to differentiate between the depressed children and non-depressed children. Scores above 13 indicate the "depressed" level whereas scores below 13 indicate the "non-depressed" level. In the original 18 items scale, the scores range from 0 to 2. However, in the scale I used for the project, the scores ranged from 1 to 3. Therefore, its range of scores was between 18 and 54 and its cutting score was 31.

I used the DSRS in this project because it could measure the changes in the depression level of the children when the scores of their pre-tests and post-tests were compared. As well, this scale was easy to understand since the scale items were written in simple language and the response categories were few.

(3) Impact of Event Scale (IES)

The IES measures the characteristics of response to traumatic stress, resulting from clients' recent life changes or from a specific event. It is a 15 items list, composed of both intrusive and avoidance experiences. The intrusion items are: 1,4,5,6,10,11,14. The avoidance items are: 2,3,7,8,9,12,13,15 (Horowitz, et al, 1979). The higher the total scores, the greater the level of the symptoms will be reflected.

Intrusion responses include nightmares, unbidden thoughts and images, and strong waves of feelings of the trauma (Horowitz, et al, 1979). Intrusion responses may occur when the events were so hurtful that the memories stay in the person's consciousness and/or sub-consciousness in the form of vivid images, scents or feelings. The intrusion responses signal that clients' unpleasant memories needed to be dealt with so that they will not affect their mental and psycho-emotional functioning.

Avoidance responses may include denial of the meanings and the consequences of an event, behavioural inhibition, counter-phobic activity, blunted sensation and emotional numbness (Horowitz, et al, 1979). These thoughts may arise to cope with painful or unhappy memories.

The IES is more often used with smaller samples because what it measures is less common among the normal population. In a study of a small sample of 66 subjects, the

split half reliability of the total score of 15 items was high (r = 0.86). Internal consistency of the sub-scales was high when using Cronbach's Apha (intrusion = 0.78, avoidance = 0.82). As well, there was a correlation of 0.42 (p>0.0002) between the intrusion and avoidance sub-scale scores, which supported that the two subsets were correlated in the study (Horowitz, et al, 1979). The findings of this study suggested that the same incident could affect a person to have both intrusive as well as avoidance thoughts. The reliability of this scale was supported by test-retest results in this study. The scale's sensitivity was also supported by the study since it could measure changes over time.

This scale is culturally sensitive as it has been used with clients from various educational, economic, and cultural backgrounds in longitudinal studies (Horowitz, et al, 1979).

I used the IES in this project for the following reasons: First, it could measure the avoidance and intrusive responses of children. Sexually abused children may have intrusive thoughts such as flashbacks and they cope with them by avoiding their memories (Briere & Elliott, 1994). Other children may have nightmares due to their negative life experiences. Although the IES has been extensively used with adult population in small research samples, I found this scale was very useful for my child clients because the IES items reflected many of their intrusive and avoidance mental experiences.

To help children use IES, the following method was employed. I explained each item to the child and discussed his or her response to each item. Then, I asked the parent to read the scores to compare if there were any score discrepancies between her observation of the child at home and at the agency. I also asked the child if he or she

agreed with his or her parent's comments. It often surprised the parents that they could learn so much about their child from the scores.

Second, since the IES is a sensitive scale and can measure changes over time, it has met the evaluation goal of this project. The change of scores in the pre-test and the post-test of this project served as a reference point to help me understand my clients' therapeutic progress.

B. Self-rating scales for parents

(1) Index of Self-esteem (ISE)

The ISE measures the degree, the severity, or the magnitude of a problem with self-esteem, which is defined as the evaluative component of self-concept (Abel, et al, 1984). Data of a "combined standardization" sample which uses Cronbach's Alpha as a measure of internal consistency indicates that ISE has a good to excellent reliability (0.93) and a 5.23 standard error of measurement (SEM). In addition, it has a good to excellent content, construct, concurrent and factorial validity (Abell, Jones, & Hudson, 1984).

The ISE is cultural sensitive. It has been applied to large samples of subjects from different socio-economic strata and used successfully with different ethnic groups.

The range of ISE scores is between 0 and 100. There are two cutting scores used as diagnostic criteria to differentiate a significant self-esteem problem level from a clinically non-significant problem level (Abell, et al, 1984). A study by Nugent (1994) further supports that ISE cutting scores can lead to reliable clinical decisions about the differentiating of clinical level problems from non-clinical level problems.

The first cutting score is 30 (+/- 5). Scores below 30 indicate that there is an absence of a clinically significant problem with self-esteem. However, cores above 30 suggest that there is a clinically significant problem with self-esteem. The second cutting score is 70. Scores above 70 suggest that clients have experienced severe stress from their self-esteem (Hudson, 1984, cited in Corcoran & Fischer, 2000, p.283).

In this project, all clients had scored every item. Therefore, clients' total score was computed by the summing up of all item scores (with the negative scores reversed) and by subtracting 25. The number "25" was the number of items of the scale.

The ISE used in this project had been edited in its criterion responses. I combined response category 1 (None of the time) and 2 (Very rarely) to be the first response category; and response category 6 (Most of the time) and 7 (All of the time) to form the fifth response category. Therefore, instead of having seven response categoies, the ISE scale I used in my project contained only five response categories. The purpose of making these changes was that clients might find it easier to score when there were less response categories.

(2) Beck Depression Inventory (BDI)

Beck and his associates developed the original BDI in 1961. This scale was revised in 1971. It measures the severity of depression in adolescents and adults on a 4-point scale. It is not used for diagnostic purpose, but for screening and research. The current BDI version (revised 1993) is a scale of 21 items about symptoms and attitudes. Items 1 through 13 constitute the cognitive sub-scale whereas items 14 through 21 comprise the somatic-performance sub-scale. The items include the cognitive, affective,

somatic, and vegetative dimensions of depression (Carlson, 1996, cited in Impara & Plake, 1998, p.117).

In six samples of 944 outpatients, the BDI had alpha reliability coefficients ranging from .79 to .90. Its item-total correlations ranged from .07 to .68, with most values in the .30 or better range. Validation evidence also supports content, discriminant, construct and concurrent validity of the BDI. In addition, studies suggest that BDI represents one general syndrome of depression which includes three highly inter-correlated factors. These factors reflect negative attitudes towards self, performance impairment and somatic disturbance (Carlson, 1996, cited in Impara & Plake, 1998, P.118).

Interpretation of the BDI scores is described as the follows (Beck, 1985, cited in Stehouwer, 1987, p.26):

0-9 Normal range
10-15 Mild depression
16-19 Mild-moderate depression
20-29 Moderate-severe depression
30-63 Severe depression

According to the above classification, if a client has a score above "9", it means that the client has a clinical problem of depression.

The BDI has much merit: It is simple to administer, it has been well researched, and it is a simple test to measure the presence and depth of depression. The test items cover the majority of symptoms associated with depression and it is a good indicator of the extent of the depression (Carlson, 1996, cited in Impara & Plake, 1998, p.119). It is useful as a screening procedure and can validate other measures to determine depression (Beck, 1985, cited in Stehouwer, 1987, p.27). However, the weakest part of the BDI is its

validity. For example, it fails to discriminate the distinct constructs between depression and anxiety (Waller, 1997, cited in Impara & Plake, 1998, p.121).

The BDI was used for my adult clients because it met the project goal that it could measure clients' various aspects of depression.

Chapter 5

Case Analysis of Families A and B at EHCC

Overview of Treatment Process

This chapter describes my practicum experience at Elizabeth Hill Counseling Centre (EHCC) from May to October, 2001. It presents a thorough case analysis of Families A and B. Solution-focused therapy (S-FT), narrative therapy (NT), and structural family therapy (SFT) were used as treatment techniques. Individual, dyadic, and family therapies were used as the treatment modalities.

Both families A and B completed all the therapy sessions of the CSA issues in a three-month period of intervention (from May to early August, 2001). After the summer break, Family A continued to attend therapy for another two months to discuss the mother's new relationship and the child's adjustment to her mother's dating. In addition to the CSA therapy sessions, Family B attended four other therapy sessions to learn family rules, family roles, family transactions and parenting skills.

In the rest of this chapter, I will describe both Families A and B according to the following sequence:

I. The reason for referral

II. Family background

III. Presenting issues

IV. Goals of therapy

V. Treatment process

VI. Termination of individual, dyadic, and family therapies

VII. Impact of therapy on clients

VIII. Evaluations

IX. Personal thoughts

Family A

I. Reason for Referral

Tiffany, a 30 year old Metis woman, and her daughter, Janice, 11 years old, were referred by their C/FS worker to my project for group therapy after Janice's disclosure of her sexual abuse in April, 2001. Tiffany was in an emotional crisis due to the break up of her family. The family's C/FS worker requested immediate counseling at clients' home to relieve Tiffany's anxiety.

II. Family Background

Janice was the only child of her family. Janice's father and mother were never married. When Tiffany was 18, Janice's father encouraged Tiffany to try sex with him. Tiffany got pregnant after the incident. However, Janice's father denied the parent-child relationship. In Janice's early years, her father took her out a few times, then he disappeared.

When Janice was three months old, Tiffany met Owen. Owen was divorced and had six sons. When Janice was six months old, Tiffany and Owen lived together. They separated when Janice was two years old, but they continued a sexual relationship. When

Janice was six years old, Owen moved in to live with the family. One year later, Tiffany and Owen got married.

Janice's sexual abuse

Janice and her cousin, Hope, had been sexually abused together by Owen since Janice was seven years old. The abuse occurred during Hope and her mother, Lucy's weekend visits, which were about two to three times per month. Lucy often left Hope in the care of her sister's family because she was very busy with her studies. Tiffany, on the other hand, was working night shifts. In the day time, Tiffany was sleeping or visiting friends in the neighborhood. Owen was handicapped with a "dizziness" problem and he always stayed home. The sexual abuse happened when Owen and the girls were alone.

Janice experienced less sexual abuse because she threatened to tell her mother if Owen continued to assault her. Both girls did not disclose their abuse because they feared that it would break up Tiffany's marriage.

When Janice was six, one of Owen's son who was fourteen years old touched Janice inappropriately in her bath-tub and this incident was also reported to C/FS.

Tiffany's family background

Tiffany's parents separated when she was one or two. She had no impression of her real father or the paternal side of her family. She was the eldest child in the family. Her mother remarried when she was about 10 years old. One year after their marriage, her stepfather's construction business went bankrupt and he started drinking to cope with his loss. Later, Tiffany's mother separated from him.

Tiffany related very well to her grandfather who passed away when she was 11 years old. Since then, she did not feel happy in her family. She felt that her parents, especially her stepfather was partial to her sister, Lucy. As a result, she did not relate to her stepfather at all.

Tiffany's child sexual abuse

When Tiffany was about seven years old, her cousin touched her and her sister inappropriately. Her cousin was about ten years old at that time. Tiffany suspected that her sexual abuse might have caused her to have sex with a friend when she was fourteen. At sixteen, she was forced and threatened by a friend to have sex.

III. Presenting Issues

In the initial interviews, Tiffany was still in an emotional crisis because of the break up with her ex-husband. It seemed that she was too pre-occupied in the separation that she was not able to attend to Janice's needs. Tiffany disclosed that she had depression for many years, but managed not to use any anti-depressants. The disclosure might have increased her depression and affected her coping. In addition, Tiffany was afraid to run the family by herself because she had been very dependent on her ex-husband who used to make almost all of the family decisions. She also felt that she had become a man-hater after Janice's disclosure because she had been hurt by her ex-husband and many other men in her life.

According to Tiffany, Janice exhibited CSA symptoms. Janice failed her school subjects and had behavioral problems at school. Janice could not relate to other children and she stole sometimes.

IV. Goals of Therapy

After a few therapy sessions, both Janice and Tiffany became more aware of what changes they wanted in their lives. We set the following therapeutic goals.

Janice

- To have more confidence.
- To have less nightmares.
- To have less "scary" (CSA) impact.
- To develop friendships.
- To improve family relationship (include her relationship with her cousin, Hope).
- (Group) To make new friends and have fun.
- (Group) To feel better and know that she was not the only girl with child sexual abuse.

Tiffany

- To be able to enjoy life again.
  (Tiffany wanted to feel content and not to compare herself with her sister.)
- To improve her self-esteem.
- To improve her relationship with her sister. (The student therapist's suggestion. However, Tiffany felt it was extremely difficult to reconcile with her sister.)
- To help Tiffany cope with Janice's coping.
- (Group) Janice could improve her self-esteem and realize life could get better for both of them.

Family goals (Janice and Tiffany)

- To enhance parent-child communication.
- To enhance the mother-child relationship.
- To discuss family roles and family rules.
- To discuss sex education and coping skills to deal with CSA impact on future relationships.

V. Treatment Process

Joining and assessing

Home visit, Sessions 1 & 2

During the home visit, Tiffany was breaking down from the separation of her ex-husband, Owen. Tiffany worried that she would not be able to cope with her upcoming wedding anniversary. She was blaming her sister and mother for disclosing Janice's sexual abuse to C/FS and for the break up of her family. I joined with Tiffany by tuning into her feelings. Tiffany felt that her feelings about Owen were not being denied. Then, I explored her feelings about the family break up. She felt insecure because of the lost of her ex-husband's financial support and emotional support, and she worried that she would not be able to run a family by herself. As well, she missed the love from Owen.

I joined with Janice by talking to her as a friendly person. I explored her feelings towards the sexual abuse. She felt angry, sad, and regretful for having disclosed her abuse. She put the blame on her cousin, Hope, for not being able to keep secrets.

I assessed the family interaction and Tiffany's support for Janice. Tiffany was overly pre-occupied with the loss of her husband. She was not aware of Janice's needs for support. Janice always looked at her mother after talking to me. It seemed that she was trying to gain approval from her mother of what she had just said. I affirmed Janice by stating that she had made the right choice to disclose and explained that her sexual abuse was not her fault.

As well, I assessed how the living environment had affected the family's coping. Janice disclosed to me that her stepfather took naked pictures of her and her cousin in the sports room. With Janice's permission, I informed Tiffany. Tiffany said this was the first

time she learned about it. I explored Janice's CSA symptoms and how it had affected her daily living. Janice had nightmares and flashbacks everyday. I informed the family that living in the same environment might remind Janice of her sexual abuse and affect her coping. Soon after Tiffany and Janice moved to a new area.

In the first therapy session at the agency, I followed up on Janice's testimony at the police station, her medical check and Tiffany's coping with her anniversary.

To assess and understand a little more about what Janice had gone through, I interviewed Tiffany alone to understand Janice's sexual abuse. I also explored Tiffany's child sexual abuse, and assessed if it affected her perception of Janice's sexual abuse and her ways of helping Janice to cope.

Finally, I explored why she treasured her previous marriage. Tiffany admitted she did not feel there was warmth in her childhood. The relationship with her ex-husband was the longest relationship she had ever had. I joined with her by talking about the good times in her marriage.

Janice did not feel at ease in the therapy room. She thought she was taped and the tape would be given to the police to testify. I named this feeling "unsafe" and explained to her that the camera was closed with a lid. But, I also explained it would be used in the group for learning purposes. After clarification, I asked if she felt safe. She said, "Yes."

To enhance Janice's psychological functioning, I explored how she felt after her sexual abuse. I observed that Janice needed more time to develop a trusting relationship to discuss her feelings. She was cautious in her words. Nevertheless, we were able to externalize her sexual abuse. Janice named it "Scary" because she was very scared when

it happened. We practiced how to use positive thoughts to overcome nightmares or flashbacks when they occurred.

In session 2, the focus of therapy was still on joining and assessing. Janice was still very cautious with me. To help her feel having more control over her environment, we discussed her family support.

Using scaling questions, I asked Janice if there was a scale, starting from 0 to 100, 0 meant 0% of support, and 100 meant 100% of support, how much support she had received from her mother and other family members. Janice felt that she got 100% support from her mother, her aunt, and her grandmother. She got 50% support from her cousin (Hope), 30% from her grandfather, and 0% support from her ex-stepfather. Janice became aware of her family support and admitted she felt stronger after the discussion.

From sessions 3 to 19, intervention followed the five themes, as mentioned below:

(1) Narrative/solution-oriented genograms.

(2) Coping with the break up of the family.

(3) Alleviating some CSA symptoms.

(4) Enhancing the parent-child relationship.

(5) The mother's personal issues.

Excerpts from each treatment theme are described as the follows:

Theme 1: Narrative/solution-oriented genograms

Sessions 3, 4

The third and the fourth sessions were used to draw narrative/solution-oriented genograms to assess and help the family understand their family dynamics, strengths, resources and support. Janice drew genograms of her paternal and maternal families. Tiffany only drew her maternal family because she had no memory of her paternal family.

When discussing the genograms, I asked clients the following questions: Who were the most supportive relatives? What had these relatives done for them? How did these relatives affect their lives? Were there any crises in their lives? Were there any successful times they could cope with the crises? What did they do to cope with the crises? Were any of these crises still affecting their lives? How did they handle them? How did they want their lives to be different? How would they like to achieve those changes? Were there any support in the family? How much support would they get if on a scale, from 0 to 100 %?

It was important to locate the times when there was love in Janice's life so that she could find strengths to cope with her trauma. Meanwhile, I did not overlook both mother and child's unresolved issues. I helped them look at her strengths and the family resources, and discussed solutions to the unresolved issues.

During therapy, Janice also drew an eco-map to identify her priorities in life and sources of support from both family and non-family environments.

In session 4, there were some improvements in the mother's coping. Tiffany had tried to understand what had happened to make sense of her life. She became more able

to accept Janice's sexual abuse. She realized that Janice was most important in her life. She was able to keep on diet. I affirmed what she was doing with praise.

With Janice, we used worksheets to identify "my strengths", "things that are special about myself" and "future strengths" to enhance her awareness of her strengths and potential. The activities were about the positive aspects of Janice, which made Janice feel good. Janice became more open in talking about herself. She even disclosed that she liked a boy.

To sum up, emphasizing clients' strengths and family supports in the first fourth therapy sessions facilitated the "joining" process and prepared Janice to discuss her sexual abuse in the future sessions.

Theme 2: Coping with the break up of the family

Sessions 5, 6, 10, 11

In the fifth session, Tiffany was struggling to let go of her relationship with Owen. During individual therapy, Tiffany admitted she knew that re-uniting with Owen was impossible if she had to protect Janice. However, she revealed that when she and Owen had a short separation the previous summer, Owen wrote Janice and told her he was proud of her. Tiffany said, " Even if he had sexually abused Janice, Janice still wanted him to come back."

During family therapy, I facilitated the mother and daughter talked to each other. It was to help Tiffany understand Janice's coping, her perceptions of Owen, and her sexual abuse. As well, it was to help Janice make sense of her life by discussing why her mother did not protect her during those years of abuse. Since Janice was always trying to

please her mother by telling what her mother liked to hear, she did not dare tell her mother her real thoughts. I sided with Janice, sitting besides her, and giving her encouragement to tell her mother her true feelings.

To enhance Tiffany's understanding of how Janice felt about her abuse, I told Tiffany that Janice named her sexual abuse "Scary". Then, I explored when Janice felt "scared." Janice explained she felt scared when Owen touched her and when he threatened her not to tell her mother. I asked Janice where the abuse happened. Janice disclosed that Owen did it in her mother's room and her bedroom. Tiffany looked shocked.

To understand why Janice did not disclose earlier, I encouraged her to explain to her mother. Janice felt that her mother would not believe her since she was just a young kid. She was "sort of" regretful for not telling her mother earlier. I intensified the message by stating that it was not her fault for not telling earlier and for not being able to save herself. Janice heard and smiled.

I asked if Tiffany had noticed any signs of the abuse. This was to create a conversation that Janice could hear why her mother did not protect her. Tiffany asked if Janice could still remember when she took her to see a doctor who said Janice had "Attention Deficit Disorder" (ADD). Tiffany told Janice that her misbehavior at school made her think that "ADD" was the cause. Janice suddenly realized something and said, "Oh!..." I asked if Janice could forgive her mother for not being able to protect her. Janice said, "Yes." Her mother looked comforted.

To support Janice, I invited Tiffany to give Janice a hug to show her love. To intensify the message of love, I asked Tiffany about her priority in life. Tiffany said firmly, "Janice." Janice smiled.

To explore their expectations on Owen's punishment, I asked how many years they would want Owen to be put in jail, if on a scale of 0 to 100 years of punishment. Janice said, "forever." Her mother looked sad but said, "for the things he did to Janice, "forever."" I wondered how they would feel if the imprisonment was only a few months or if he were set free. This "predicting setback" question (NT) was used to help Janice not to have false expectation on Owen's sentence. Janice looked disappointed while Tiffany looked relieved when they heard the possibility of a light sentence. I asked Janice if she felt it was unfair. She said, "sort of." We discussed how to cope with this "unfairness". Janice chose to let go and move on rather than continue to feel unfair and doing nothing.

Then, we discussed the letter Tiffany mentioned earlier. Janice said she never believed in Owen and knew that he lied. I asked Janice what had stopped her telling her real feelings to her mother. Janice said she was scared. Tiffany looked torn apart. At the end of the therapy session, Tiffany commented that Janice had never told her these things before and she felt that she understood her daughter more because of the therapy.

In session 6, Tiffany and I discussed her "preferred" life story. I asked how her life was different when living without Owen. Tiffany felt that when she was with Owen, she could not go out with men because he would think she was having affairs with them. She had to get Owen's permission even if she wanted to go out with women. After the break-up, she could go out with men and women. I asked her what message these

changes had told her. She felt she had more freedom and control over her life, and she preferred this life style.

In session 10, Tiffany became aware of the fact that Owen should bear the responsibility for abusing the girls. She revealed that police had recently retrieved thousands of files about pornography of both girls and boys from her computer. Her niece, Hope, had been asked by Owen to pose as a movie star. She was worried that Hope could not make the identification of her picture correctly and Owen would walk away from justice. I asked how she felt about Owen. She said, "Angry, confused, and frustrated." I affirmed her for putting the responsibility of abuse on Owen and for being the protector of Janice. The compliments heightened Tiffany's trust in me. She disclosed that Owen cross-dressed.

Tiffany also disclosed that her stepson, John, was violent to his wife, Rosa. Tiffany said Rosa told her to treasure her freedom. I asked if Rosa was reminding her of her past. She nodded. I explored why Rosa was not able to get out and if there were any similarities between their life experiences. Tiffany thought Rosa was psychologically dependent on her stepson, the same as what she was like before. I asked if she felt free now. Tiffany was silent. After some thoughts, she said quietly, "yes."

In session 11, Tiffany had increased her acceptance towards Janice's real feelings for Owen. In family therapy, I asked why Janice used black color to write her name in the genogram. Janice explained it was because she was with Owen. She pointed at Owen's name, which was also black in color. Then, she showed her mother the big red words (she hated red) "I hate Owen" on the far end of the eco-map. Tiffany smiled. Tiffany

even permitted Janice not to use Owen's last name when writing the post-tests. In their communication, there was more trust and acceptance than before.

Theme 3: Alleviating some CSA symptoms

According to Janice's mother and school counselor, Janice stole and had other behavioral problems in school. As well, she failed in her school subjects and did not mix with other children. After her disclosure, Janice had nightmares every day, and had flashbacks sometimes.

In this time-limited project, treatment for Janice was focused on alleviating her nightmares, flashbacks, low self-esteem, depression, and distorted views towards relationships. As well, we discussed peer and school issues.

(a) To alleviate nightmares and flashbacks

Home visit, Sessions 2, 15

During the home visit, I explored the stories in Janice's nightmares with NT and S-FT questions. How often did she have nightmares? What was happening in her nightmares? Who were in her nightmares? Were there any killings or dangerous scenes? How did these things happen? What was she doing in the nightmares? How did she feel in her nightmares? How did she escape? What happened at the end? Was she safe? How did her nightmares affect her? What did her nightmares tell her? How did she help herself not to be affected by her nightmares?

Janice's everyday nightmares had a similar story. Her mother and she were running for their lives. Her stepfather, Owen, was chasing them to kill them because they

disclosed the sexual abuse to C/FS. Her mother fell to the ground and Janice returned and helped her mother to get up and run. Although Owen was not able to kill them, Janice felt "scared" in her dreams. She could not sleep well and felt helpless to control the situation. To help Janice to cope, I encouraged her to think of happy things when she had bad dreams. When focusing on positive thoughts, her negative thoughts might diminish. Janice liked ice cream. She would like to think of ice cream when having nightmares.

With Janice's permission, I discussed Janice's dreams with Tiffany. To ensure Janice about her mother's safety, I asked Tiffany to tell Janice how she was feeling and if Janice needed to worry about her. To encourage Janice, I told her that when she felt stronger, the frequency of nightmares would decrease. Janice also admitted that she had flashbacks about her sexual abuse. Janice would like to think of ice cream to protect her when she was under "flashback" attacks.

In session 15, Janice revealed that she had a dream. Janice dreamed that she walked past the house of her aunt, Owen's sister. She went to talk to her aunt. Suddenly, Owen appeared at the door. In another scene, Janice and her mother were standing near a garbage bin. Owen walked towards them and gave Janice some Lego. This is important to note that in the first scene, Janice felt scared. In the last scene, Janice was not afraid when her mother was with her. She even looked at Owen.

I compared Janice's previous dreams with this recent dream. Janice looked pleased when she noticed the difference. Tiffany looked satisfied with the discussion. Finally, I discussed a safety plan with Janice and asked what she should do if she ran into Owen again. She said, "Stay away."

(b) To help Janice develop a positive view towards intimate relationships and sex

Sessions 6, 7, 8, 10, 11

Janice and her cousin were sexually abused together by Owen. They were tied by ropes, taken pictures (put on computer disc) and inappropriately touched. Research supports that children who have been sexually abused may develop a distorted view towards intimacy and have sexual problems when they come of age (Beutler, et al, 1994). Since Janice revealed that she was interested in a boy, I took the opportunity to discuss with her about a non-distorted view towards family relationships and intimacy.

To discuss this topic, the mother's involvement was important. In her role as a parent, Tiffany could assure Janice what was appropriate and inappropriate, and set the stage for future discussions.

Before involving Tiffany in Janice's therapy, I tried to understand her sexual practices and see how it might have affected her view towards Janice's sexual abuse. This information helped me know where her mother stood and be cautious when involving the mother in discussing sex and family relationships with the child.

In session 6, Tiffany talked about her intimacy with her Internet friend. Then, I explored her intimacy with Owen. Tiffany said they did not have an intimate relationship. After their marriage, they did not often have sex. But, they tried everything, including anal sex, oral sex, swinging, bondage, and the use of different things for sexual stimulation. However, she did not feel satisfied with her sexual relationship with Owen and coped with this unhappiness by eating and sleeping. Tiffany perceived her sexual practices as her preferences, and there was nothing unusual with her sexual practices.

In session 7, Tiffany cried and was very worried that she might have contracted HIV. After learning Janice's sexual abuse, the doctor advised Tiffany to take an HIV test because her ex-husband may have contracted HIV through casual sex.

In session 8, I explored how Tiffany's sexual relationship with Owen may have affected her current family. Tiffany worried that if she had contracted HIV, she would not be able to take care of Janice in the future. I explored how she would feel towards Owen if this would really happen. Tiffany was angry with him and realized he did not care about her, since he still had sex with her when he had relationships with men.

In session 10, Tiffany disclosed that Owen had asked her to pose in the nude and he put her pictures on the computer. Upon this new information, I wondered how Tiffany would view Janice's experience of having pictures taken of her. There were many similarities between Tiffany's sexual practices with Owen and Janice's sexual abuse. Tiffany's perception of her sexual practices may have affected how she interpreted Janice's sexual abuse and the extent of help Janice needed.

In session 11, we discussed worksheet 1, "What a healthy couple usually does" and "What they do not do." The focus was to help Janice understand what a healthy family was like. In the discussion, Janice and her mother could learn each other's views. Tiffany could teach Janice about what was right and wrong. One particular comment about this discussion was that Janice said repeatedly, "They will not rape each other."

Then, I used a toy house to illustrate healthy boundaries in a family. Janice said she learned similar information in Health Class.

Worksheet 2 was used to help Janice develop a non-distorted view towards sex and intimacy and coping methods to deal with flashbacks. In the discussion, effects

questions (NT), landscape of consciousness questions (NT), and coping questions (S-FT) were used to help Janice learn about CSA impacts on a person's adulthood and the coping methods. Unbalancing techniques (SFT) were used to side with Janice, while "universal truths" (SFT) were used to challenge her thoughts about intimacy. Some questions and answers of the family are recorded as follows:

Worksheet 2:

1. What is sex?

Janice: When people kiss and hump. (I asked what she meant.)

Tiffany: Intimacy between male and female.

2.Why does a couple have sex?

Janice: Because they love each other.

Tiffany: To express their physical attraction to one another or feelings.

3. When people mention love-making, what does it mean to you?

Janice: They kiss & hug & also penetration (I mentioned the last word).

Tiffany: (Silent)

4. What is your view on "normal" sex? Share your opinion if you have such view?

Janice: Normal sex is when people do not force people to have sex.

Tiffany: (Silent)

5. What are the wrong ways to have sex. Give three examples, or more.

Janice: To rape.
To not love each other.
Taking pictures.

Tiffany: When your partner feels they are to do something they don't want to.
Forcing/raping.
Molestation.

6. How can the ways mentioned above hurt? Give three examples.

Janice: It can damage the other person.
They may not want to have sex with other person.
They may feel uncomfortable. (Janice said she felt the same way.)

Tiffany: They can hurt physically as much as emotionally.

7. What is the appropriate age to have sex? Why do you think so?

Janice : Around 25 and older because if you are younger, it may hurt you. (I asked Janice how it might get hurt.)

Tiffany : There is no age limit. If we, when two people really love one another, they will decide & know when to have sex.

8. Some children, when they grow up, may have flashbacks about their abuse when they are having sex.

(a) What does this tell you?

Janice: That you are getting scared. Something isn't right. Something may go wrong and the guy is a bad guy.

Tiffany: That they have a hard time coping with their abuse & need love as well as support.

(b) If it happens to you in the future, how will you handle these flashbacks and your feelings?

Janice: flashbacks <u>try to forget about it.</u>
<u>When you feel better, you'll be stronger to handle flashbacks.</u> (I gave hints.)
feelings <u>think of happy things, talk about it to your boyfriend.</u>

Tiffany: flashbacks (Silent)
feelings (Silent)

When discussing #3 with Tiffany and Janice, I asked if Tiffany would like to use the toys to demonstrate the regular kind of love-making. Tiffany preferred me to do it. I used Janice's words, "they kiss and hump" and had penetration. The demonstration was very brief and was about two minutes. I checked with Tiffany to see if she agreed or if she had any opinions. Tiffany felt fine. The purpose of this exercise was to help Janice see the differences between the things done by Owen and a regular kind of love-making process.

In the follow up discussion, we discussed that Janice always mentioned forced sex and rape. I wondered if Janice felt like being "raped" by Owen. Janice said, "Yes." I asked how it felt. Janice said, "splitting and tearing at the bottom." Tiffany explained Janice's feelings to show she understood how Janice felt. In short, Janice had a strong opinion that both women and men should not be forced in any sexual acts. Janice said, "They must be willing."

Tiffany was very surprised when Janice mentioned that her appropriate age to have sex was 25. I felt that Tiffany thought it should be of an earlier age. I explained that Janice might change this age in the future. I further explained that some sexually abused children had blurred their boundaries and had sex at an early age, like 12 or 13. The question (No.7) helped us understand what Janice was thinking and it might help Janice to have an idea about what she wanted for herself.

After discussing the worksheet, I asked Janice, "Why shouldn't adults have sex with children?" This question was used to help Janice develop a perspective that adults should not sexually abuse children. Janice explained her views: (a) adults should have sex with their partners, (b) when kids grow up, they should have sex with their partners, (c)

kids were too young to have sex, and (d) sex should not be forced. Tiffany listened attentively.

To check with their feelings, I asked Janice if she learned something, Janice replied, "Sort of." Tiffany smiled. Tiffany was very impressed with the discussion and said they did not talk like this at home.

In individual therapy, Tiffany disclosed that she was a bi-sexual. She said that no matter which sexual orientation Janice would take, she would still accept her. I assured her respect for Janice's choice.

Session 11 was the last therapy session dealing with CSA symptoms. At the end of the family therapy, I invited Janice to tell us what she had learned so far. Janice remembered all the topics that had been discussed. Tiffany laughed. She said Janice knew what I would ask her and had prepared the answers. Then, I highlighted the family's strengths to bring closure to the CSA sessions. I praised Tiffany that she had a high level of resiliency, she recovered quickly, and she was protective of Janice. Janice was brave to have shared her feelings and expressed her ideas very well. In addition, she was hardworking by attending therapy regularly. Both were happy to hear their strengths.

(c) To enhance the child and the mother's self-esteem

Sessions 8, 11, 12, 14, 17, 18

Studies on different age groups indicate that "physical appearance" is the self-evaluative domain which relates most strongly to self-esteem. The correlations of these studies are between .70 and .80, which support that perceived appearance and self-esteem are high across the life span. The second self-evaluation domain that relates very strongly

to self-esteem is the extent to which people feel valued and supported by their significant others (Harter, 1993, cited in Hoyle, et al, 1999, p.84). In addition, competence is also strongly related to self-esteem (Deci & Ryan, 1995; Wells & Marwell, 1976; & White, 1959, cited in Hoyle, et al,1999, p.84).

Janice

Janice indicated that she did not have much confidence in herself. Janice felt she was not pretty. Moreover, her cousin, Hope, always teased her appearance. Janice realized that she was not popular. She did not have friends. She had some classmates to hang around with, but they often became enemies the next day. Janice also felt that she was not competent as she did not do well at school. Besides, her sexual abuse had affected her self-image. Thus, enhancing Janice's self-esteem was an important treatment goal.

In the therapy, Janice's strengths and supports were highlighted. Praise was often given to affirm what she had done right. When therapy had enhanced her coping, her self-esteem would be more likely to improve.

In session 19, Janice disclosed that she had relationship problems with Hope. She felt that Hope was mean to her and teased her too often. Thus, she wanted to walk away from the relationship. I suggested that she could tell Hope how she felt about her teasing. We also looked at the impact of "walking away without giving any explanation." Janice realized that walking away might not help at all since Hope might not even know why Janice was upset.

Janice later told me that she told Hope how she felt towards her "meanness". After that conversation, Hope teased her less than before. Janice said she felt more confident. Both parents of Hope and Janice told me that they were amazed at Janice's assertiveness.

Janice also demonstrated her confidence by choosing similar age group children to be her friends. After her disclosure, she made friends with two younger children in her neighborhood, feeling they would not be mean to her. After the summer, she was able to make friends with classmates of her own age.

I had discussed with the family how to improve school grades, and assigned tasks for Tiffany to tutor Janice at home. However, Tiffany had not followed the suggestions. In the therapy sessions, I invited Tiffany to tell Janice about her expectations regarding Janice's learning. Janice also set goals to make small changes in school. Janice chose to "pay attention" to the teachers. As a result, Janice passed her most difficult subject, Mathematics, the first time. She also did well on a language test and started to like her school and teachers.

In short, Janice had improvements in her physical appearance, social relationships, and competence. Her self-esteem was enhanced as a result of therapy.

Tiffany

Duirng therapy, I worked on strengthening Tiffany's self-esteem by highlighting her strengths, affirming her thinking and what she was doing right.

In session 8, Tiffany did an exercise regarding her "ideal self" and "real self". The discussion was to enhance Tiffany's self-acceptance by highlighting her improvement.

Tiffany's ideal self:

- I want to be physically fit
- I want to become more confident
- I want to lead a happy life style
- I want to learn to enjoy life
- I want more friends

Tiffany's real self:

- Losing weight and being active
- Have a little more self-esteem and confidence
- Starting to appreciate some happiness and not dwelling on the past
- Having Janice by myself

It was observed that Tiffany was making progress in the process of therapy.

Theme 4: Enhancing the parent-child relationship

(a) Tiffany's dating

Sessions 7, 15, 19

After the break up with Owen, Tiffany claimed that she became a man-hater. During the journey of her recovery, Tiffany started to be interested in men again. However, her dating had been affecting the parent-child relationship. For instance, when she was seeing a man she met on the Internet, Janice became very anxious and did not want her mother to go out with him. She even overheard her mother's telephone calls and laughed and laughed to embarrass the man. When Tiffany stayed overnight at her Internet friend's place without telling Janice where she went, Janice acted up. Tiffany did not realize why Janice misbehaved and disciplined her by sending her back to her room. This resulted in a cycle of acting out and punishments.

In session 7, I explored how Janice felt towards her mother's dating. Janice did not want her mother to date. She drew a picture of how she would feel if her mother did

not date right away. In the picture, there were a few cartoons and they smiled so happily. Janice said if her mother did not date just then, she would smile, smile, smile. Nevertheless, she wanted her mother to have a boyfriend in the future because she wanted her mother to feel happy. We discussed her expectations about her mother's boyfriend. She also wished that her mother and her mother's boyfriend would take her to Disneyland.

In the family discussion, I facilitated the communication process where Janice told her mother about her thoughts on her mother's dating. This enhanced their mutual understanding towards this issue.

To help Janice feel secure with her mother's dating, I explored who would be Tiffany's priority. Tiffany said, "Janice." Janice looked very glad.

I explored Janice's attitudes towards her future relationship with her boyfriend. I asked Janice when she grew up, if she would like to get married or to live with her boyfriend. Tiffany looked at Janice very closely. Janice said, "To live with boyfriend." Janice explained that it was "too much", "too complicated" to get married. I wondered if Tiffany's broken marriage had affected Janice's preference that she wanted "living together" rather than "getting married" in her future relationship with her boyfriend.

At the end of this session, Janice was very happy. She came to me to say "thank you." Obviously, discussing her mother's dating was important to her.

In session 15, Tiffany was very confused in the new relationship with Gary, because she was struggling if this was a serious relationship involving commitment. We discussed the dilemma and developed new perspectives toward her worries.

In family therapy, I facilitated both mother and child to talk about Tiffany's dating. I encouraged Janice to express her feelings towards Gary so that her mother could understand how she felt about her dating. Janice was very reserved in her comments.

In session 17, in family therapy, I explored how Janice felt towards Gary. Janice commented, "He is weird." I explored what Janice meant by "weird". Janice described Gary as talking and laughing a lot, but she did not think their conversation was funny. She also felt Gary looked old. I asked Janice to compare Gary with Owen and her mother's previous boyfriends. To help her talk, I asked her if Gary asked her about her school and if he was interested in talking to her. Janice felt that Gary was different because only Gary had asked about her and her school. A scaling question was used to measure how much she liked him. Janice thought Gary was an 8 on a scale, ranging from 0 to 10. Then, she looked at Tiffany for approval. Tiffany told Janice eagerly that Gary planned to take them both to Vancouver for holiday.

Since Tiffany initially had a worry that a stepfather might sexually abuse his children, I wondered if this was also a worry of Janice. I explored if Janice felt Gary was the type who would sexually abuse children. Janice said she was not sure but would be careful. Tiffany listened attentively. I agreed with Janice that it took time to know a person, hoping that Tiffany heard the message clearly and would not expect Janice to trust her boyfriend too quickly.

In session 19, in individual therapy, Tiffany disclosed that she had told Gary about Janice's sexual abuse. I explored Gary's response. Tiffany said he was appalled and then he said he would always be there for them. Tiffany said Janice knew she had told Gary about her abuse.

In family therapy, I asked how Janice felt about her mother's disclosure of "Scary". Janice was surprised that her mom had revealed her secret. Janice asked, "Does he hate me?" To assure Janice of Gary's support, I asked Tiffany to tell Janice about Gary's response. Janice still looked embarrassed. I suggested that Tiffany should not go into the details of what Owen had done to Janice because it might affect how Gary would perceive Janice. Tiffany agreed. Janice looked less anxious.

In individual therapy, I checked with Janice's self-perception and asked her why she did not need to feel embarrassed. She explained it was not her fault. I praised her answer and told her that if a person could accept her, he or she could accept her just as she was. Janice smiled. Then, I used a scaling question, from 0 to 100%, to ask how much she could trust Gary not to sexually abuse children. Janice felt she could trust Gary 50%. I explored what had made her like Gary. Janice liked him because he bought her tickets and took her out for dinners. But, she still felt she did not know him well and would need to know him better. I agreed with her.

To understand Janice's acceptance towards Gary, I asked if she would like Gary to live with her family. Janice said she would not oppose if her mother wanted. She clarified it was just like there was a man in the house. I explored her acceptance towards other men. Janice said she would not want a man, if he were like her aunt's partner, to live with her family.

To conclude, the above therapy sessions helped Tiffany and Janice understand more about each other's feelings towards Tiffany's dating. As well, the sessions helped Janice adjust better to the new family changes brought by her mother's dating.

(b) The discussion of family rules

Session 8

In session 8, we discussed the family rules, what they liked and what they did not like. When Janice was explaining what she disliked, she was very anxious. Tiffany looked at her very attentively. I suggested that Janice could "pass" if she did not want to tell. But, the words of Janice came out loudly, " Can't have a boyfriend!" Tiffany was very insistent that Janice could not have a boyfriend. I asked Tiffany to explain to Janice. She explained that she did not want Janice to have sex with boys and get pregnant at a young age. Janice tried to argue but her voice soon died down when her mother spoke. Nevertheless, Janice had attempted to assert herself and her mother heard it.

(c) Parenting

Session 6

In session 6, to help Tiffany be aware of the positive changes after Owen had left, I asked Tiffany how it was different when she was parenting by herself. Tiffany felt that when Owen was present, Owen tended to ground Janice for everything and Janice lost the normal life of a child playing outside the house. When Owen was gone, she disciplined Janice by taking away her privileges. I explored what this change was telling her. Tiffany said, "I am like a mother now helping Janice to have a normal kid life."

Theme 5: The mother's personal issues

(a) Sibling relationship

When I first met with the family, Tiffany blamed her mother and sister for breaking up her family. Tiffany said she could not talk to her sister, Lucy, as deeply as she used to since Lucy and her mother disclosed the sexual abuse to C/FS.

In session 2, Tiffany was very upset about her sister's pregnancy. Tiffany disclosed that she had miscarriage one or two years ago and she was jealous of her sister having what she wanted to have. She was angry with her sister "who had everything whereas she had nothing." To challenge this view, I drew a chart and asked her to list "what her sister had" and "what she had". Her sister had a boyfriend, a university degree, a baby, a house (shared with her stepfather), and her mother. She had only Janice. We looked at the future possibilities such as a job, a healthy relationship or an opportunity to go back to school. Tiffany felt better after the discussion.

In session 5 of Lucy's (Tiffany's sister) therapy, Lucy shared how she had come to the conclusion of why she felt Tiffany and her relationship was so bad. Lucy concluded that Tiffany was jealous of her since she was born. She had everything before Tiffany, despite Tiffany being the first born. Lucy felt that Tiffany was glad that Lucy had a boyfriend, but she also felt jealous of her. Hope was born before Janice. Tiffany was proud of Lucy's having a University degree, but she was also jealous. Tiffany always wanted to have a second baby, but Lucy had her second baby earlier than Tiffany did.

In the initial sessions, Tiffany's anger towards her sister was manifested when she refused to switch her appointment with Lucy. When I suggested a joint interview for

Janice and Hope, Tiffany showed her temper when she asked if she should bring Hope to the next session.

During the summer, there were two incidents after which Tiffany thought she would not talk to her sister again. In session 7, she felt very offended when she thought Lucy said she was an "irresponsible mom," by leaving Janice and Hope alone at home after mid-night.

Tiffany was angry at Lucy's comment, and she in turn blamed Lucy for being irresponsible. She said Lucy left Hope in her care for two months while she visited her in-laws in Yellowknife some years ago. She complained that Lucy slept all the time because of her depression and never took Hope anywhere. She also revealed that Lucy did not sleep as much since her partner, Sam, moved in; however, Lucy still did not spend enough time with Hope.

To help Tiffany be aware that there was a mutual love between the sisters, I spoke loudly to intensify the message that Lucy trusted her with the care of Hope. I also challenged her by stating if Lucy were not her sister or related by blood, she would not have forgiveness for the things said about her and for what Owen had done to her daughter. Tiffany agreed that they never really broke up because they were sisters.

In the second incident, a cousin told Lucy that Tiffany mentioned Hope wanted to be laid by Sam. Lucy was very angry. I encouraged her to talk to her sister. Tiffany revealed that she and Lucy had talked a few times on the phone. She explained to Lucy that Sam was Hope's ex-boyfriend Sammy, not Lucy's partner, Sam. Also, she would not criticize her because she was "her blood and sister". Tiffany admitted that there had been more conversations since the incident and that their relationship had improved.

(b) Mother-daughter relationship

Session 3, 10, 14

To enhance Tiffany and her mother's relationship, I focused on highlighting her mother's care and concern for her. In the initial sessions, she felt that her mother only gave her financial support but no moral or emotional support. After therapy, her attitudes towards her mother changed. For example, she realized that her mother truly loved her. Her mother was worried that she was alone and spent time with her at a bar while Janice was attending a summer camp. Tiffany also felt that her mother was supportive when she thought she might be pregnant with her Internet friend. Her mother was also very worried about this relationship because she did not like the man. However, her mother said she would support her as long as she was happy.

VI. Termination of Individual, Dyadic, and Family Therapies

At the end of October, 2001, Tiffany's dating relationship was stable and Janice appeared to have adjusted to it positively. Tiffany commented that she noticed Janice had improved in every area of her life. Tiffany began to feel it was too much for her to come twice a week while Janice was attending group therapy. After consulting with my supervisor, I discussed with the family that all the family therapy sessions were completed. Both Tiffany and Janice responded positively.

VII. Impact of Therapy on Clients

The family therapy had been very intensive. It had given a great deal of support to the family. Because therapy started in early May, which was only about two weeks from Janice's CSA disclosure, the family received timely intervention.

In the course of treatment, Janice was able to express her feelings, make sense of her life, and alleviate her CSA symptoms, such as flashbacks, nightmares, and a low self-esteem. She learned about boundary issues and developed a positive view towards family relationships and intimacy. She also chose to move on.

Janice improved in her grades and was able to adjust to a new school environment. She started to like school and her teachers. She gradually made friends of her own age. She learned how to express her feelings and became assertive in explaining herself to Hope.

The parent-child relationship had improved. Tiffany was able to put the responsibility of abuse on Owen rather than on her sister and mother. Janice was able to tell her mother about her real feelings towards Owen. Janice felt Tiffany was her protector. Moreover, Tiffany assured her love for Janice by telling Janice she was her priority. Parent-child activities, such as playing board games and making bracelets and necklaces in the therapy room made Janice feel good about the times spent with her mother.

There had been much improvement in the parent-child communication. Tiffany and Janice learned about each other's views in the therapy sessions. We discussed Janice's sexual abuse, peer issues and learning at school. We also talked about healthy family relationships, intimacy, family roles, family rules, and Tiffany's dating. In session

14, Tiffany said, "I could not understand why Janice revealed so much about herself during therapy." In fact, this improvement was also manifested sometimes at home. In session 14, Tiffany revealed that Janice told her she was interested in a boy.

Finally, Janice was able to cope with the changes brought by Tiffany's dating. This adjustment was important so that the new family changes would not adversely affect Janice's coping with her CSA trauma.

Tiffany had made a lot of improvements. After therapy, she was able to cope with Janice's sexual abuse and take better care of Janice. She had improved her relationships with her sister and mother. She no longer was a man-hater. She had become more confident and took better care of herself. She felt free.

To conclude, the impact of therapy on the family was very positive. Both Tiffany and Janice had achieved all their individual and family goals. I also helped the family adjust to the new changes brought by Tiffany's dating, which was not an intervention goal in this project. They attended 19 family therapy sessions, and enjoyed them very much. How did I know Janice enjoyed the therapy? In session 17, even though I informed the family we had finished discussing all the topics for treatment, Janice told her mother and I that she wanted to come to the agency every week to get out of the house and to talk about things.

VIII. Evaluations

The family wrote the pre-tests (T1) and post-tests (T2) before and after CSA treatment of the child. This treatment included individual therapy and family therapy. They also wrote pre-tests (T3) before the child attending group therapy.

Table 5.1: Janice's scores of Rosenberg Self-esteem Scale (RSE)

Rosenberg Self-esteem Scale (RSE)			
Pre-test	Post-test	Pre-test	Median
T1	T2	T3	25
10	7	8	

Janice showed improvement in her T2 score after her CSA treatment. Her score decreased from 10 in T1 to 7 in T2. However, it increased again to 8 in T3. When Janice was writing the pretest of group therapy (T3), she was grounded by her mother. It was because she started to act up under the influence of an undesirable adult neighbor.

Janice did not fill out the post-test of group therapy (T4). However, her improvement was obvious. For instance, in the last group session, Janice told the group about her new discovery in the week. It was that Janice felt she was pretty.

Table 5. 2: Janice's scores of Depression Self-rating Scale (DSRS)

Depression Self-rating Scale (DSRS)				
Pre-test	Post-test	Pre-test	Median	Cutting score
T1	T2	T3	36	31
27	21	21		

There was a noticeable improvement in Janice's depression. Janice's T1 score was 27. Her T1 score decreased to 21 in T2 and T3. It is likely that her DSRS score would have further decreased after attending group therapy, because Janice had said a few times during the group that she was happy. Compared with the cutting score "31", T1, T2, T3 scores indicated that Janice did not have a clinical problem of depression. The improvement in her scores may have supported her claim, "I am happy."

Table 5.3: Janice's scores of Impact of Event Scale (IES)

	Impact of Event Scale (IES)									
	Pre-test			Post-test			Pre-test			Median
	In 1	Av1	T1	In2	Av2	T2	In3	Av3	T3	37.5
	16	26	42	**9**	26	35	**9**	27	36	
Average	2.29	3.25		1.29	3.25		1.29	3.38		

Figure 5.1: Janice's scores of IES: Intrusive and avoidance scores

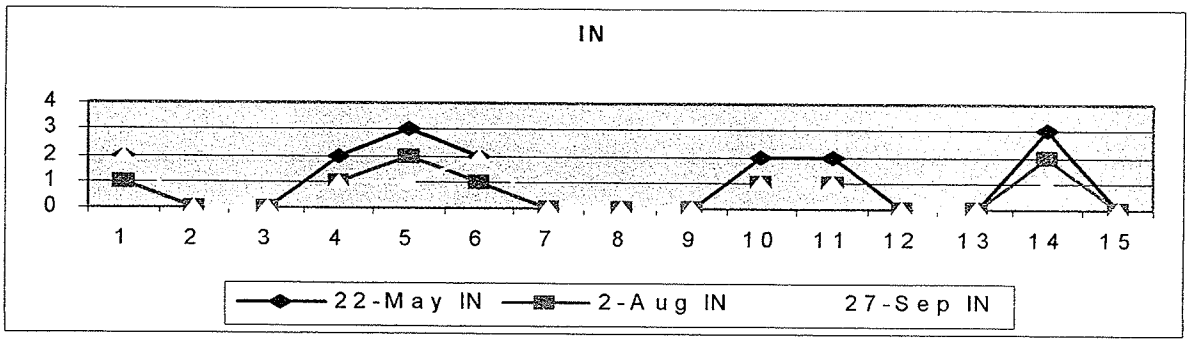

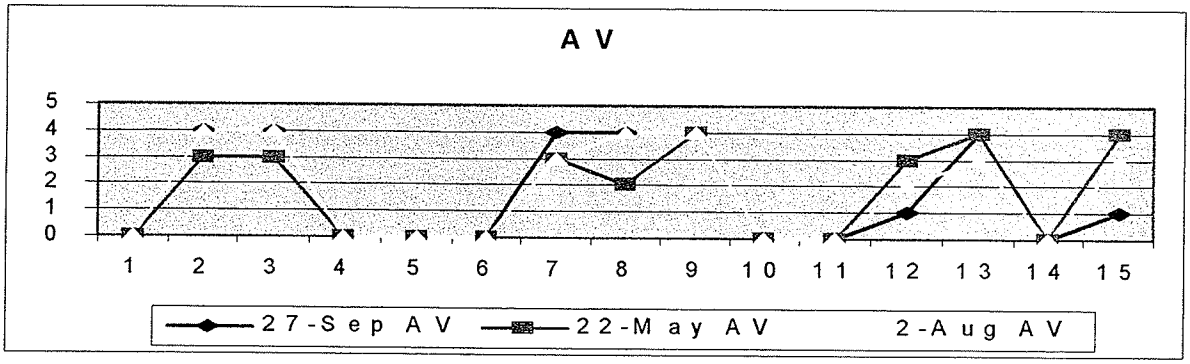

Janice had decreased her intrusion score from 16 in In1 to 9 in In2 and In3. Her avoidance scores remained 26 in Av1 and Av2, but slightly increased to 27 in Av3.

The lower the scores of intrusion and avoidance items, the less intrusive and avoidance thoughts the clients have. However, there were exceptions to this claim when I compared the same items across different IES tests of Janice.

On item number "6" ("I had dreams about it."), Janice scored "2" (rarely) in In1, and "1" (not at all) in In2, and "2" (rarely) in In3. Janice's nightmares decreased during her CSA treatment. In a later dream, unlike her previous nightmares that Owen was trying to kill her family, there was no chasing but reconciliation, and Janice was even able to look at Owen. The contents of her more recent dreams may indicate that Janice showed improved psychological stability when writing In3.

Janice had increased her avoidance score from 26 in Av1 and Av2 to 27 in Av3. However, from analyzing some items, I noticed that Janice had made some improvements. On item number "14" ("Any reminder brought back feelings about it."), Janice scored "3" (sometimes) in Av1, "2"(rarely) in Av2, and "1" (not at all) in Av3. On item number "12" ("I was aware that I still had a lot of feelings about it, but I didn't deal with them."), Janice scored "3" (sometimes) in Av1, "2" (rarely) in Av2, "1" (not at all) in Av3.

On item number "7" ("I stayed away from reminders of it."), Janice scored "3" (sometimes) in Av1 and Av2, and "4"(often) in Av3. I feel that this higher avoidance score of Av3 might not mean a negative manifestation in coping, but that Janice had the determination to stay away from the thoughts of her sexual abuse.

To conclude, the averages of In1, In2, In3 fell from 2.29 in In1 to 1.29 in In2 and In3. It showed that Janice's intrusion scores had decreased from "rarely" and "sometimes" to "rarely" and "not-at-all". The averages of Av1, Av2, Av3 increased from 3.25 in Av1 and Av2 to 3.38 in Av3. This change indicated that Janice's avoidance scores had slightly increased and remained in the range of "sometimes" and "often". In short, both her IES T2 and T3 scores improved.

Table 5. 4: Tiffany's scores of Index of Self-esteem & Beck Depression Inventory

Index of Self-esteem (ISE)				Beck Depression Inventory (BDI)		
Pre-test	Post-test	Pre-test	Cutting score	Pre-test	Post-test	Pre-test
T1	T2	T3	30	T4	T5	T6
56	40	46		27	15	13

Tiffany's ISE score had decreased from 56 in T1 to 40 in T2. This may indicate that Tiffany had made considerable improvements in coping with Janice's sexual abuse and her ex-husband's betrayal. However, her T2 score increased from 40 to 46 in T3.

It is well known that depression and problems with self-esteem are highly correlated (Abell, et al, 1984). Research supports that depression is a significant component of self-esteem. If a client is depressed in response to a particular life situation, he or she may not exhibit problems with self-esteem. Conversely, if a client's depression stems from internal conflicts, it is more likely that the person will experience a problem with self-esteem (Abell, et al, 1984). When Tiffany started therapy, she revealed that she had experienced depression for many years. However, I am not sure how her depression had affected her self-esteem since she did not think depression was an issue to be dealt with in therapy.

I surmise that the following factors might have adversely affected Tiffany's self-esteem and her T3 score. When writing her T3, Tiffany was very upset because Janice started to misbehave after becoming acquainted with an adult neighbor. Furthermore, she was angry that this neighbor spoke against her to Janice.

Her scores in T1, T2 and T3 indicated that she had a clinically significant problem with her self-esteem, though there was an overall improvement. Tiffany needed to

continue to work on her self-esteem, possibly with professional help. Having a job and family support could facilitate positive changes.

Tiffany had improved her BDI scores and her depression had decreased. Her T4 score indicated that she had moderate to severe depression (range of 20-29). Her T5 and T6 scores indicated she had mild depression (range of 10-15).

When writing T4, Tiffany was very confused about her feelings. She scored "two responses" to six different items. When writing T5 and T6, Tiffany scored one response to each item. She was more confident in her scoring. (Immediately after the test, in order to calculate T4, I asked Tiffany to assign a percentage value to each of the two responses of each of the six items. I then chose the response with a higher percentage rating. If each percentage rating of the two responses was 50%, I used the response that would best represent Tiffany's feelings and situation as observed during therapy.)

Clients' Evaluation

Tiffany and Janice had been very satisfied with the therapeutic outcomes from family therapy. Tiffany said she and Janice never communicated as well as they did during therapy and she understood Janice much more than before. She also told me that Janice had made great improvement in every aspect of her life.

IX. Personal Thoughts

Family A had a very complicated background with diverse issues. The mother was also difficult to work with. According to her sister, Lucy, Tiffany easily got mad and she did not know how to talk to Tiffany when she would suddenly blow up in her temper

tantrum. Meanwhile, Janice seemed to keep things inside and was very cautious in trusting people. She refused to reveal her real feelings in the first few sessions of therapy. In this case, I saw it as a challenge to engage Tiffany to attend a sequence of therapy sessions and help Janice to express her feelings in this time-limited intervention.

I found that S-FT, NT and SFT effectively tackled the diverse problems of this family. These therapies were very helpful in guiding me on how to conduct assessments, plan interventions, work with certain symptoms, strengthen family resilience, and evaluate service.

During therapy, I noticed that Tiffany's sexual practices had a great impact on how she perceived and helped Janice cope with her sexual abuse. I learned to help Tiffany be aware of her own assumptions about Janice's coping and understand Janice's feelings so that she could be more supportive of her. I also noticed that Janice, at her young age, had her way of understanding the concepts of sex, living together and getting married. I was further convinced that it was very important to help children in this project to develop a non-distorted view towards relationships.

One unexpected outcome was that Janice had gained over 20 pounds during therapy. Her increase in weight possibly supported her claim, "I am happy." However, I believed that it was also because of Janice's resiliency and her parental support that there were psychological, emotional, behavioral as well as physical improvements.

Family B

I. Reason for Referral

Lucy, a 28 year old Metis woman, and her daughter, Hope, 12 years old, were both referred by their C/FS worker to my project for Hope's CSA treatment.

II. Family Background

Hope was the only child in her family. Her parents, Lucy and Ron, were in a common-law relationship. Her parents dated at fifteen and they soon lived together. Her father always overspent and caused financial tension. During the last six months of her parents' relationship, her father slept with different women. Hope's parents finally separated when she was about two years old.

Hope's mother, Lucy, later went back to school to complete her high school education. Lucy earned a degree at the University of Manitoba around the same time of her daughter's disclosure in April, 2001. According to Lucy, Hope had become accustomed to her busy school schedule and this had not adversely affected the parent-child relationship.

Hope was living with her step-grandfather, her grandmother and her mother's boyfriend, Sam. Her grandmother and her step-grandfather were separated. Her step-grandfather lived with the family when he paid the house's down payment a few years ago. Her grandmother lived with her family for about two years, after returning from British Columbia. Hope's mother and Sam met on the Internet in December, 2000. Sam moved in about two weeks before Hope's CSA disclosure. Hope had great adjustment

problems in living with Sam and in coping with his parenting style. Her mother found she was pregnant in May, 2001.

Hope's sexual abuse

Hope and Janice were being sexually abused together by Janice's stepfather. Hope was eight years old when she first experienced sexual abuse.

Lucy's family background

Lucy was the youngest sibling of two daughters in her family. She shared the same family-of-origin as her sister. Lucy was close to her grandfather and got along with her stepfather.

Lucy was rebellious toward her mother in her adolescent years. Throughout her childhood, she thought that her mother was partial to her sister, Tiffany. This pattern of thinking had persisted into her adulthood. Lucy claimed that she had gradually accepted her mother's partiality and understood why her mother was partial since Tiffany was always in trouble and in need. Lucy also felt that her parents were partial to Tiffany's daughter because her niece looked more like an Aboriginal than Hope.

Lucy's child sexual abuse

Lucy revealed that she had been inappropriately touched throughout her childhood. When she was six or seven, her cousin, aged 11, molested her by touching her for about a year. It stopped when her mother and her aunt found out about the abuse. There were other men who attempted to touch her but failed. At sixteen or seventeen, she disclosed her sexual abuse to her mother. Her mother was very upset but disclosed that she had also been sexually abused. Lucy said she had not sought any treatment for her previous sexual abuse, but she had been depressed for about seven years.

Lucy and her sister had been sexually abused together by their cousin. However, there were discrepancies about the length of their abuse and the stories of their sexual abuse.

III. Presenting Issues

In our initial interviews and phone contacts, Lucy told me that Hope did not have serious observable problems and Hope was fine. Lucy revealed that she hoped that Hope could be as strong as herself. Lucy was able to cope with her CSA trauma, manage her separation with Hope's father and achieve her university degree.

In the initial therapy sessions, I hypothesized that Hope was experiencing CSA symptoms. Intervention was thus targeted on alleviating symptoms, such as flashbacks, low self-esteem and enhancing parents' support of the child. As therapy progressed, Hope's cousin, Janice, and aunt, Tiffany, showed great concern about Sam's parenting. Moreover, Tiffany and Lucy mentioned that Hope seemed to have some boundary issues by sexually acting out. Hope's difficulties in adjusting to a new stepfamily may have adversely affected her coping with CSA trauma.

Lucy also revealed that Hope had an anger problem. During grades 1, 2 and 3, Hope was seeing a counselor weekly to help her manage her anger.

IV. Goals of Therapy

Hope

- To increase confidence.
- To improve relationships (e.g. with Janice).
- To be able to feel better and cope with the trauma.

- (Group) To feel better and know that she was not the only one, and to make friends with others.
- (Group, from Lucy) Let Hope know that she is not alone.
- (Lucy) Hope could be able to resolve the majority of CSA issues in this project, especially that Hope could be able to love and maintain healthy relationships with men in the future.

Lucy

- To alleviate anger towards Owen, the abuser.
- To alleviate her frustration with her sister.
- To alleviate her depression (The student therapist's suggestion. But I also told Lucy if her depression was genetic or solely because of chemical imbalance, it would be very difficult to change.)

Family goals (Lucy and Hope)

- To enhance the mother-child relationship.
- To enhance parent-child communication.
- To discuss sex education and coping skills to deal with CSA impact on future relationships.
- To discuss family roles, family rules and hierarchy.
- To discuss parenting/adjustments in a "stepfamily".

V. Treatment Process

In Family B, intervention followed the six themes, as mentioned below:

(1) Developing a positive way to help Hope cope with her CSA impacts.

(2) Narrative/solution-oriented genograms.

(3) Helping Hope and Janice talk about their feelings and CSA experiences.

(4) Alleviating some CSA symptoms.

(5) Enhancing the parent-child relationship.

(6) The mother's personal issues.

Excerpts from each treatment theme are described as the follows:

Theme 1: Developing a positive way to help the child cope with her CSA impacts

Sessions 1, 2 & 1st home visit

In the initial sessions, NT, and S-FT were my primary intervention techniques. In S-FT, scaling questions and coping questions were used to assess how clients coped. In NT, externalizing the problem and effects questions were used to help clients deconstruct their problems. SFT was also employed when I used the unbalancing techniques.

In session 1, in family therapy, I helped Lucy to make sense of her life by discussing why sexual abuse happened to her daughter. I listened to her story and explored how she felt. I also assessed the family's immediate needs.

Lucy appeared to be very self-controlled in expressing her anger towards Owen. To help her release her feelings, I sided with her that she was justified in feeling angry with Owen. I asked if she ever felt suspicious of Owen. When talking about the suspicious incidents, Lucy began to open up more. Then, I explored how Hope felt about her sexual abuse. Hope kept her feelings deeply inside by giving very superficial answers. I respected that she was not ready to share her feelings with me and I did not further discuss the issue.

After session one, I had a telephone conversation with Lucy. Lucy revealed that when Hope first disclosed, she told Hope she was sorry for not being able to protect her, and after that, the family did not mention the abuse again. I affirmed Lucy's bravery for her apology and assured her that it was not her fault. Nevertheless, I encouraged Lucy to be available when Hope wanted to talk about her abuse. Hope might have flashbacks or questions related to the abuse. I suggested that the family should not pretend the abuse did not happen, or think that not mentioning it would help Hope reduce her distress or

forget the abuse. If the family ignored what had happened when Hope was ready to talk about it, it might aggravate her CSA symptoms (Foe & Riggs, 1994; Johnson & Kenkel, 1991; Spaccarelli & Fuchs, in press, cited in Feiring et al., p.9).

In session 2, in individual therapy, I explored how Hope coped with her sexual abuse. She felt that she could talk to no one about her abuse because the family did not talk about it. Hope was not used to talking about her feelings. To help her talk, I mentioned some feeling words and she chose the words which reflected her feelings. Hope said she felt sad, alone and lonely. She asked why this happened to her. She felt angry and mad. She felt good to have somebody to talk to. To help Hope feel better and that the sexual abuse was not a part of her, I taught her how to externalize her sexual abuse. She named it "Black".

To assess her family support, scaling questions were used. I asked Hope how she would rate her family on a scale of support, with 0% as no support, and 100% as the highest level of support. Hope felt that her mother's support was 90%. She wanted more trust from her mother. She felt the support from her grandmother was 85%. She explained that her grandmother was not as close to her as her mother. She felt she got only 25% of support from her grandfather because he was very partial to Janice and had made her do dishes since she was 10 years old.

Hope felt that she could talk to her grandmother more than her mother. As well, she preferred talking to Janice about her sexual abuse rather than to her mother. After the allegation to the police, Hope felt "low"(depressed) because she felt Janice was distant from her for her disclosure. I reassured her that she was right to disclose and it was not her fault.

In family therapy, I set goals with the family. As observed, Lucy had a coping pattern of bypassing problems. Instead of facing the problem and trying to solve it, she tended to cope with her problem by sleeping. I reflected to her about my observation. It was important that Hope could feel her mother cared about her. I encouraged Lucy to talk to Hope more often and understand if she was coping successfully.

Theme 2: Narrative/solution-oriented genograms

Session 3

In session 3, Narrative/solution-oriented genograms were used to help clients look at the strengths and the supports of their family-of-origin. Hope drew genograms of her paternal and maternal families. Lucy only drew her maternal family because she had no impression of her paternal family. Similar questions asked in Family A were applied in this therapy session.

In individual therapy, Hope expressed her hatred by using the color "black" to describe Owen in the genogram. However, she hid her feelings very deep and did not want to talk about Owen. Instead, she talked about her cousin who was a homosexual and had contracted HIV, which had greatly affected his health. Hope was worried that she may have contracted HIV from her sexual abuse and would die because of the illness.

When discussing Lucy's family-of-origin, I highlighted her strengths by stating that she was able to take care of Hope at a young age, and cope with the break up with Hope's father. Her achievement of accomplishing her university degree was also recognized.

Theme 3: Helping Hope and Janice talk about their feelings and CSA experiences

Sessions 4 & 5

Session 4 was a dyadic therapy (or joint interview) with Hope and Janice to provide them with a therapeutic environment to discuss their feelings and CSA experiences. In their initial individual therapy sessions, both girls seemed to hide their real feelings about their sexual abuse. As they were good cousins and had experienced the sexual abuse together, they might feel more comfortable to talk about their feelings and CSA experiences together. The student therapist could also gain a full picture about what the girls had gone through together.

To relax them and help them feel sharing was fun, I told the girls they could blow bubbles every time they talked; and if they did not feel comfortable in discussing the sensitive issues, they could "pass".

I remembered that Hope named her sexual abuse "Black". I asked why she named it "Black". Hope felt that the abuse was like a black hole to her. I explored how she felt in a black hole. She did not have the word to describe her feeling. I reflected her feeling, "helpless." She said she felt helpless to get out.

As the girls began to talk, I explored their feelings towards their sexual abuse. Hope felt betrayed, angry, sad, mad, and asked why this happened to her. Janice shared that she felt betrayed, scared, angry and guilty. Talking about their feelings, the girls became more aware of how their sexual abuse had affected their emotional state and they became more in touch with their feelings.

To facilitate the therapeutic process, I used a lion toy, to pretend to be Owen. This was to help externalize Owen as a less threatening image so that the girls would feel

more comfortable to talk about their feelings. Then, we had an enactment and discussed what they would want to tell "Owen", the Lion toy. Each girl took turns speaking. Hope started first. Examples are as follows:

Hope	**Janice**
"I hate you."	"I want to kill you."
"I want to kill you."	"I want to kick you."
"I want to kick you."	"I hate you."
"Why me?"	"You are crazy."
"You are perverted."	"You are insane."
"Leave me alone."	"Get away!"
"I don't want to see you."	"I don't want to see you."

To enhance the girls' awareness of what was bothering them, I asked them what had hurt them most. They felt Owen hurt them most when he touched them.

To explore if they had any guilt feelings of not being able to help each other, I asked if they had ever tried to help each other. They said they did help each other by hitting Owen. Janice did more of the saving part. Most of the time, they felt scared and did not do anything. Suddenly, Hope felt very angry and turned to Janice to tell her that Owen kissed her mouth two times. Janice told Hope he kissed her on the mouth once. Janice was very upset and told us she hated him when he pretended to kiss her in front of her mother before her bedtime. In the discussion, they felt "free" to talk about something disturbing them in their hearts.

I explored if Owen did anything to get them not to tell. The girls said simultaneously, "He did!" Janice revealed that Owen always gave her money, and Hope said Owen gave her candies or little gifts.

Hope kept the sexual abuse as a secret also because she did not want to break up her aunt's family. I asked Hope if she would tell should the abuse happen again. Hope said, "Yes." I asked her why so that she might develop her perspective. She explained that by telling, the abuse would end earlier.

Janice explained that she did not tell because she always lied and she was afraid her mother would not believe her. I explained to Janice that she should try to tell even though she thought nobody would believe her. Finally, the girls understood that in fact not many children lied about child sexual abuse because it was something that was too serious to lie about.

I explored if there were anything they wanted their mothers to have done for them during the abuse. They said "No." I asked if they could explain why. Hope explained that it was because their mothers did not know.

To help the girls develop a realistic view towards Owen's sentence and cope better in the future, I explored how they would cope if Owen were sentenced only three months in jail or if he were set free. The girls were surprised and angry at the short sentences. I asked if they would choose to remain angry or to move on. They said they would choose to move on. The girls found their preferred story.

I explored if there was anything or any unfinished business they would like to do to Owen. Both of them suddenly jumped towards me. They took the lion toy and they

tried to beat him to death. Janice kicked Owen (the Lion toy) in his private place and beat him everywhere. Hope beat his head and heart.

I noticed that the girls talked more when they were together. However, at the end of the therapy, both girls tended to identify with each other by saying and doing the same things.

In session 5, the intervention focuses were to help Lucy express her anger and facilitate the mother and daughter to talk about their feelings towards the abuse.

In individual therapy, Lucy was informed of the girls' therapy progress in the last joint session, and their disclosure about what Owen had done to them. Lucy was surprised and said she did not know that.

In family therapy, we discussed different possible losses about life. I explained to Hope that the discussion was not to minimize her abuse and hurt, but to look at life from a wider perspective and that sometimes there were misfortunes in life. The life losses included "being blind", "being paralyzed", and "losing a million dollars". I used a soft toy to represent her, so she could look at herself from an outsider perspective. Hope said that if there was a choice, she would prefer to choose child sexual abuse than to be "blind" or "paralyzed" because she could still see and walk around.

To enhance Lucy's role as the protector of Hope, I asked Lucy about her priority in life. Hope was very anxious and dared not look at her mother. But, she was listening attentively. When Lucy said Hope was always her priority, Hope smiled happily.

Theme 4: Alleviating CSA symptoms

According to Lucy, the teachers noticed that Hope became a "social butterfly" and talked too much to both girls and boys since she was in Grade 3. Lucy also revealed that Hope did not talk much about her deep feelings, but liked to defy authority by not listening and by talking back. Lucy remembered that Hope posed in a sexy way when Janice's stepfather took the family pictures for her family at Christmas.

To help Hope alleviate her CSA symptoms, intervention focused on the discussions of boundaries issues, healthy family relationships, a positive perspective towards intimacy, ways to cope with flashbacks, nightmares and depression. NT, S-FT and SFT were used in the therapy process to achieve these aims. The following excerpts were part of the intervention.

Sessions 6 & 8

In session 6, in individual therapy, I explored if Lucy's previous and current sexual practices had affected her view of Hope's sexual abuse. Lucy said she did not have any unusual sexual practices with her ex-husband, Ron, or her current partner, Sam. Her child sexual abuse did not affect her sex life.

Lucy and I discussed her CSA experiences may have affected her understanding of Hope's coping. Lucy said she did not think her sexual abuse had much influence on her. She also did not think she experienced less nudity than Hope. She felt that she was able to cope with it well. When Lucy was around 10 years old, Lucy went with her girlfriends to her cousin's house. Her cousin was an adolescent and he had some male

friends at his home. Each girl went with an adolescent boy to a room and tried to have sex. Lucy did it with her cousin.

When she looked back, Lucy laughed and thought the boys were foolish and could not make the girls pregnant. I reflected her thought that it was like "a child's play" to her. Lucy thought the same. But, I pointed out that she was consenting in that incident, her cousin was near her age, and they had "ordinary sex". I helped Lucy to understand Hope's situation was different. Hope was being abused frequently for three years. Hope was forced, her abuser was a much older man, and she was tied and had pictures taken. Lucy had tears.

Then, I explored how Sam's child sexual abuse and his previous relationship may have affected their current family's functioning. Sam's previous girlfriend thought that men who experienced child sexual abuse would sexually abuse their own children. She therefore broke up with him, fearing that he might sexually abuse their daughter. Upon this information, I wondered if there were any unresolved hurts which were still affecting Sam's coping with his sexual abuse, his relating to children , and his parenting.

Finally, I explored Lucy's view on sex. Lucy was opposed to forced sex. She thought that sexual practice such as swinging or with same sex people was private behavior. She also said if Hope were to be homosexual in the future, she would have no problem with that. She said she had told Hope about this already. I praised Lucy for being supportive of Hope's choice of sexual orientation. However, I also pointed out that Hope mentioned she had a homosexual uncle who had AIDS and she was very worried if she had contracted AIDS from her sexual abuse. Lucy looked as if she suddenly realized

AIDS was an issue. She became worried if Tiffany had AIDS. She thought that if Tiffany had contracted AIDS from Owen, Hope might have got it too.

In session 8, Lucy and Hope completed two worksheets. Worksheet 1 was to enhance Hope's understanding of a healthy couple's relationship. In discussing worksheet 1, "What a healthy couple does not do." Hope wrote, "Be mean to children, controlling children." Hope's comments were not related to her sexual abuse but her current relationship with Sam.

Then, I used a big toy house to illustrate the boundary issues in a family. To enhance Hope's awareness of the boundary issues in her peer relationships, we had the following discussion. If a person asked Hope to have sex with him, Hope said she would say no. Hope believed a person could have sex, probably not in Junior High but in Senior High. I asked if a person loved her, could he wait till she was ready. Hope said, "Yes." If the boy said if she did not have sex with him, then it meant she did not love him. In such a situation, what should Hope do? Hope said she would tell the guy to go to other girls and not to bother her. Hope said she would not be so stupid as to get pregnant and have AIDS.

Worksheet 2 was slightly modified from the one used by Tiffany and Janice. S-FT, NT, SFT were used in the discussion in a similar way as in Janice's sex education session. Lucy and Hope's ideas about sex and coping with flashbacks were reflected in their answers recorded from work sheet 2:

Work sheet 2 (selected questions)

1. What is sex?

Hope: Something two people do when there is love.

Lucy: Sex is the act of love a couple who care about each other, show and express with one another.

2. Why does a couple have sex?

Hope: Because they may feel obligated in a relationship or because there is love.

Lucy: To show their love.
Express their love on a different level.
To become one.

3. When people mention "love-making", what does it mean to you?

Hope: Sex.

Lucy: Love expressed sexually between a couple.

4. What is your view on "normal" sex? Share your opinion if you think there is "normal" and "abnormal" sex.

Hope: Normal sex is hugging, kissing.

Lucy: Normal sex is when two consenting adults agree to have sex.

5. If there is "abnormal sex", what does it mean to you?

Hope: Abnormal is pain and uncomfortable.

Lucy: Abnormal is forced, beastiality.

6. What is your appropriate age to have sex?

Hope: Age that you actually are responsible but to accept possible consequences of sex.

Lucy : 17/18. The person may be mature enough to understand the consequences as well as the positive aspects of sex.

2. Some children, when they grow older or become adults, may have flashbacks about their sexual abuse when they are having sex.

(a) What does this tell you?

Hope: that is healthy to remember but they should get help.

Lucy: that abnormal sex can affect you when you are older.

(b) If it would happen to you in the future, how would you handle these flashbacks and your feelings?

Hope: Flashbacks get help.
Feelings talk to family and friends.

Lucy: Flashbacks face it head on.
Feelings allow myself to feel what I feel.

In discussing #3, I asked if Lucy would like to use the toys to demonstrate the regular kind of love-making to help Hope not to develop a distorted view of love-making from her sexual abuse experience. Lucy preferred me to do it. The same procedure of demonstration was done as it was conducted in Janice's therapy.

In discussing #5, I asked if Owen caused her pain. Hope said, "Yes." I probed and asked if Owen hurt her when tying her. Hope said, "Yes, it hurt my wrist." Then, Hope told her mother eagerly how it hurt her and they talked to each other. I facilitated the communication process and suddenly Hope raised her voice, "There was never penetration." Lucy looked so relieved when she heard it. Lucy was not sure about this but never dared to ask Hope and she coped with this by bypassing it. Now, the answer came out from Hope's mouth.

When discussing #6, Hope revealed she feared contracting AIDS and becoming pregnant. She raised her voice and commented that using condoms was not a guarantee, because sometimes they could break. She then explained calmly that she wanted to grow up but not losing the privileges given to a child. I praised her explaining her view so well. Lucy listened to Hope attentively and looked very impressed at her comments.

Hope strongly believed that a girl who had sex with a guy was ready to take the consequences. Lucy was glad to hear this. I challenged Hope's perspective and told her many 13 or 14 year olds felt they knew what they were doing and were willing to be responsible for their behavior. Then, I asked Hope if she meant a 13 years old could have sex if she felt she could be responsible for it. Lucy looked anxious and wanted to know Hope's perspective. Hope disclosed that she knew some girls who got pregnant and had a tough life. Hope said she would say no. I asked if all her friends had sex at 13 or 14, how would she help herself not to be influenced by them ("raising dilemma" and "coping" questions). I pointed out people at her age were very much influenced by their friends. Hope said, if her friends around her were like that, she would talk to her mother or aunt. Her mother smiled.

I wondered how many relationships Hope would like to have? Hope said "as many as possible before the real one." I asked her to clarify. Hope said, "From now to 18." I asked her how she would relate to the unreal ones. Hope said, "To experience them." I wondered, "Have sex?" Hope said, "No, to know them." Lucy helped Hope, "To understand them. To make friends with them."

Finally, I asked Hope why adults should not have sex with children. Hope said people should have sex with those who were of their own age or were of a few years difference. She also stated that it was gross for adults to have sex with children; moreover, it would hurt them. I praised her explanation.

At the end of the therapy, Hope, who was sitting beside me, crossed over to sit beside her mother and lean her head on her mother's shoulder. Lucy and Hope were very

satisfied with the discussion. Hope commented this was the best session. Lucy turned to me and said, "Surprised, isn't it?"

In this session, Hope talked very openly about her sexual abuse with her mother. She learned about the boundary issues, a positive view towards intimacy, and ways to cope with flashbacks. Hope also developed a preferred story for herself. Lucy learned what Hope had gone through, and questions, such as "If Hope was raped?" "If Hope blamed Lucy for not being able to protect her?" were answered.

Theme 5: Enhancing the parent-child relationship

Session 6,7 & 9

In my first contacts with Hope, I checked with her feelings towards her mother's boyfriend, Sam, and the baby her mother was pregnant with. Hope said she liked them both but her facial expressions did not seem to tell the truth. Later, Janice and Tiffany disclosed that Hope was very unhappy with Sam's parenting. Sam did not let Hope explain her behavior but grounded her almost every day. Hope also told Tiffany that she would have no place in the family when the baby was born and that she would like to kill herself.

I re-assessed the case development. I felt it was important that Lucy could know how Hope felt about Sam, his parenting, and the baby, because these issues could have affected Hope's coping with her post-traumatic stress. Since Sam did not attend therapy, the non-CSA intervention focused on enhancing communication between the mother and daughter so that the daughter's feelings could be heard. We discussed family rules,

family hierarchy and roles, and parenting skills of a new-step family to resolve conflicts between Hope and Sam.

In session 6, Lucy and Hope completed a worksheet about family rules. Then, we had a discussion about the impacts these rules on the family members.

In the discourse, Hope yelled she felt "angry, frustrated, upset" about "getting grounded" for raising her voice to Sam. She explained that she raised her voice because she was blamed. Hope felt being misunderstood and treated unfairly. Suddenly, Hope exploded. She yelled that she hardly knew Sam, and had known him only since December and she could never take him as her dad. She yelled, "He was just an outsider." (In fact, Hope was acquainted with Sam just before he moved in to live with the family in April. Her mother met Sam on the Internet in December.) Lucy had tears in her eyes. Hope changed at once and put the blame on the aunties who set too many family rules on her. Hope comforted her mother and said, "I love Sam." I confronted her, "You don't." I helped her to speak her real feelings so that Lucy could really understand how she felt and not bypass Hope's problems. Hope said, "You can't discipline all the time. It is no use."

It was observed that Lucy could not accept the fact that Hope did not love Sam. Lucy was very much in love with Sam and expected Hope could love Sam in such a short period of time.

Session 7 was an individual therapy session. With Lucy, I identified the most common issues that occurred in newly remarried families. We discussed methods to help Hope to: (a) resolve the past relationship with her natural father, (b) alleviate fears and concerns about stepfamily life, (c) establish trust with Sam, (d) understand that both she

and Sam need time in their adjustments, and (e) become emotionally and psychologically attached to Sam and vice versa (Carter & McGoldrick, 1988, cited in Gladding, 1992, p. 316).

In addition, we talked about parenting skills that could be useful in a new stepfamily. We examined how the rules were being enforced in her family, and if Sam had taken the parenting role too soon. I suggested that she use positive reinforcement more often in the family. We also discussed how Sam was seen by Hope as an outsider, and how the change in family interactions had made Hope feel being excluded from her mother.

Finally we discussed Hope's difficulties in coping with the drastic changes regarding the enforcement of rules at home. I spoke loudly to intensify the message that Hope did not have time to resolve her sexual abuse problems when she had to struggle with Sam's grounding almost everyday. Besides, frequent punishment would induce Hope to lose her confidence and motivation to do better. Lucy did not disagree.

In session 9, in family therapy, we discussed family roles and family hierarchies. The purpose was to enhance the family's awareness of each member's family responsibilities and their rights, and to discuss solutions to the disputes arising from these areas.

During the discussion of family roles (worksheet 1), Hope and Lucy had no problems with their roles, except that Hope wanted each family member to do more than one task to make life less boring. They were happy about the discussion.

However, when we had a conversation about family members' power and rights (worksheet 2), Hope brought out the issue of "parenting too fast." Hope also asserted

that she wanted Sam to talk to her more often. I sided with Hope and highlighted its importance in enhancing Hope and Sam's relationship. To ally with Sam and Lucy, I explained to Hope that Sam needed time to adjust to living with her family and to learn parenting.

Finally, worksheet 3 was used to enhance Hope's awareness of Sam's positive attributes.

Worksheet three

1. Things that you like about Sam as a parent. Name 3 things or more.

Hope: (Hope spoke to my ear and said, "None.")

He is nice ("sometimes" in my ear). He takes me out ("sometimes" in my ear).

Lucy : Consistent.
Support family.
Helps me out.

2. What can make him to be a better parent? Name 5 things.

Hope: Talk to me.
Be nice.
Treat me with respect.

Lucy : He will learn how to parent.

I asked Hope if there was a scale of love, from 0 to 10, where 0 was the lowest and 10 was the highest, how would she rate her love for her mother. Hope said 10. I asked how about Sam. Hope spoke to my ear, "0." But she told her mother, "5." I asked Hope, "Are you jealous of Sam?" Hope said, "Yes." I asked if she felt Sam was between her and her mom. Hope said, "Yes." She added, "Mom always took side with him." I reflected her feelings, "You want your mom to trust you more and side with you sometimes." Hope said, "Yes."

Since Lucy now understood how Hope felt towards Sam, I suggested that they make small positive changes in the family relationship. After the discussion, Hope looked very happy and smiled to herself.

In early October, 2001, Hope and I talked on the phone again. Hope felt that her relationship with Sam had improved. They talked more. I asked what had effected such a change in their relationship and asked if Sam had changed. Hope revealed that Sam had not changed but she had become more adjusted to his living with the family. As well, her mother had talked to her more.

Theme 6: The mother's personal issues

(a) Sibling relationship

When Lucy first talked to me, she felt it was impossible that her sister would reconcile with her for the break up of her sister's family. She also said she felt impatient toward her sister's sudden blow ups and temper tantrums. However, Lucy did not oppose to my suggestion about setting a therapy goal to improve her sibling relationship. As a result of therapy, Tiffany and Lucy had talked again in a good relationship. Tiffany also gave Lucy and Hope a ride to attend the "sex education" session.

(b) Lucy's depression

Lucy reported symptoms of depression for the past seven years at the entry of therapy. According to Lucy, her doctor had said her depression was due to the imbalance of chemicals in her brain. Lucy wondered if her depression was genetic since her mother also had depression.

During the two-year period of 1998-1999, Lucy had been seeing two women therapists regularly at a social services agency. She attended therapy to deal with her depression and frustration in living with her stepfather. Lucy said she did not think future therapy would work because she had already gone through it.

I suspected that Sam's relationship with Hope, his stealing in his jobs, his unemployment, and Lucy's relationships with Sam and Hope may have adversely affected her depression. Since Lucy refused therapy to deal with her current personal issues, a therapeutic outcome could not be achieved.

VI. Termination of Individual, Dyadic, and Family Therapies

In the last family therapy session, Lucy was very disappointed that Sam had lost his job again. Lucy agreed that Sam's many issues needed attention as it was affecting their relationship, and she promised to participate with Sam in family therapy to deal with their current personal issues. Lucy later changed her mind, but requested that the availability of room booking for Hope at the Psychological Service Centre (PSC) should continue in case Hope might have a crisis in the future. Her request was approved by the PSC.

The termination was conducted in two separate home visits. In my third home visit to the family, I discussed with Hope and Lucy the therapeutic progress and areas for follow-up. Project souvenirs, narrative letters and cards were given to Lucy and Tiffany's families. In my last visit, I discussed the pre-test and post-test scores with Lucy and Hope. I also suggested other community resources for her family. Lucy promised to pass the same information to her sister, Tiffany.

VII. Impact of Therapy on Clients

As a result of therapy, Hope was able to express her feelings towards her sexual abuse and the offender. She learned about the CSA issue and its impact. Finally, she chose to let go of her abuse but to move forward in her life.

Hope alleged that she felt better. She had decreased in her nightmares and flashbacks, and improved her relationship with Janice. Hope also learned about the boundary issues, the concepts of a healthy family, and developed a positive view towards intimacy and relationships.

In the initial sessions, Lucy revealed that Hope never revealed her feelings towards her sexual abuse, her mother's partner, Sam, and his parenting at home. In the therapy, Lucy and Hope's communication was enhanced in the discussions of Hope's sexual abuse, sex education, adjustments in a new stepfamily (such as parenting and family coalitions), family roles, family hierarchies and peer issues. Hope became able to express her feelings and tell her mother about her sexual abuse. She also confided to her mother about her real feelings towards her relationships with her mother and Sam, and about her needs at home. Consequently, Lucy learned what Hope needed and felt that she could no longer by-pass these problems as she used to. After the last family session, Lucy stopped grounding Hope. Hope was happier and talked back to her parents less frequently. As well, in a telephone contact and a group session, Hope revealed that her mother and Sam talked to her more often than before.

VIII. Evaluations

The family wrote the pre-tests (T1) and post-tests (T2) before and after CSA treatment of the child. This treatment included individual therapy and family therapy. They wrote another pre-tests (T3) before the child attending group therapy and post-tests (T4) after group therapy was finished.

Table 5.5 Hope's scores of Rosenberg Self-esteem (RSE)

Rosenberg Self-esteem (RSE)				
Pre-test	Post-test	Pre-test	Post-test	Median
T1	T2	T3	T4	25
10	8	14	13	

Hope's RSE scores indicated that she had improved her self-esteem. Her RSE scores decreased from 10 in T1 to 8 in T2. When Hope was writing T2, she had not attended therapy for a few weeks. During that interim period, she was frequently grounded by her mother's partner, Sam, and had a very bad relationship with him. Therefore, Hope's therapy progress may have been affected by the family condition that she only had a slight improvement in her T2 score.

Her RSE scores increased from 8 in T2 to 14 in T3. During the time between T2 and T3, Hope had not attended therapy. Sam had just lost his job. Hope was almost grounded everyday for her misbehavior, such as talking back to Sam. In addition, her mother and Sam seldom talked to her. Hope's T3 score reflected her self-esteem was getting worse.

Hope's T4 score (13) indicated she had shown a slight improvement in her self-esteem after attending group therapy. In a group session, Hope asked me to call Lucy to

clarify an incident that her friend, Anthony, did not kiss her. I called Lucy and she promised me to talk to Hope, as Hope had requested. In a visit to the family, Hope told me that her mother had not mentioned I called and was still ignoring her for the "Anthony Incident". In addition, Hope had another crisis at school but she could not tell her mother, fearing that her mother would "freak out." Her friends at school told their parents that she had sex with her new boyfriend in his house. She felt miserable and lonely but had nobody to talk to at home. These incidents and the lack of parental support might have affected Hope's therapy progress.

To comment, Hope completed T2 and T4 about two to three weeks after the therapy was finished. When Hope was writing T2, T4, Hope experienced unfavorable non-CSA events in her life. Therefore, the RSE scores might not accurately reflect the therapy outcome. Nevertheless, Hope's self-esteem scores (T1, T2, T3, T4) fell within the range of normality. Hope's family experience further supports that her parents' attitudes towards parenting (their involvement, acceptance, and support of the child) and their child-rearing methods are important factors that affect her self-esteem (Coopersmith, 1967, cited in Hoyle, et al, 1999, p.96).

Table 5.6 : Hope's scores of Depression Self-rating Scale (DSRS)

Depression Self-rating Scale (DSRS)					
Pre-test	Post-test	Pre-test	Post-test	Median	Cutting score
T1	T2	T3	T4	36	31
28	32	32	36		

Hope's DSRS scores increased in T2 and T4. Hope claimed that her depression came from her family, not from her sexual abuse. In a group session, she said that she was depressed because she felt unhappy with her family and that her sexual abuse affected her only in the past, but not now. On item number "13" ("I like talking about my family."), Hope scored "2" (sometimes) in T1, "3" (never) in T2, "2" (sometimes) in T3, and "3"(never) again in T4.

From the scores of T2, T3 and T4, I noticed that the peer issues and her mother's ignoring her had greater effects on Hope's depression (when writing T4) than did Sam's grounding (when writing T2 and T3). Parental support and parent-child communication were important to help Hope deal with her developmental issues, such as her peer relationships. In addition, her family relationships and developmental issues might have affected her depression.

Table 5.7: Hope's scores of Impact of Event Scale (IES)

	Impact of Event Scale (IES)												
	Pre-test			Post-test			Pre-test			Post-test			**Median**
	In1	Av1	T1	In2	Av2	T2	In3	Av3	T3	In4	Av4	T4	37.5
	11	31	42	**13**	29	42	**17**	29	46	**14**	31	45	
Ave rage	1.57	3.87		1.86	3.62		2.43	3.62		2	3.88		

Figure 5.2: Hope's scores of IES : Intrusive and avoidance scores

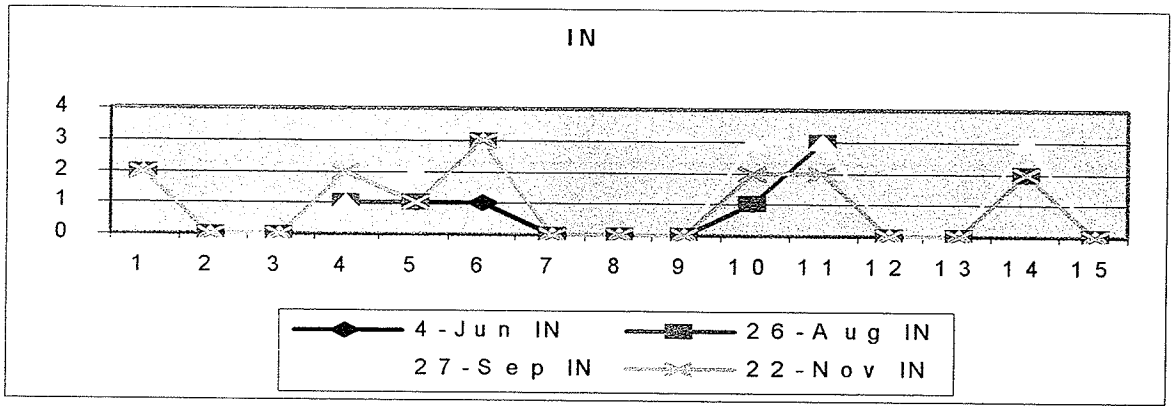

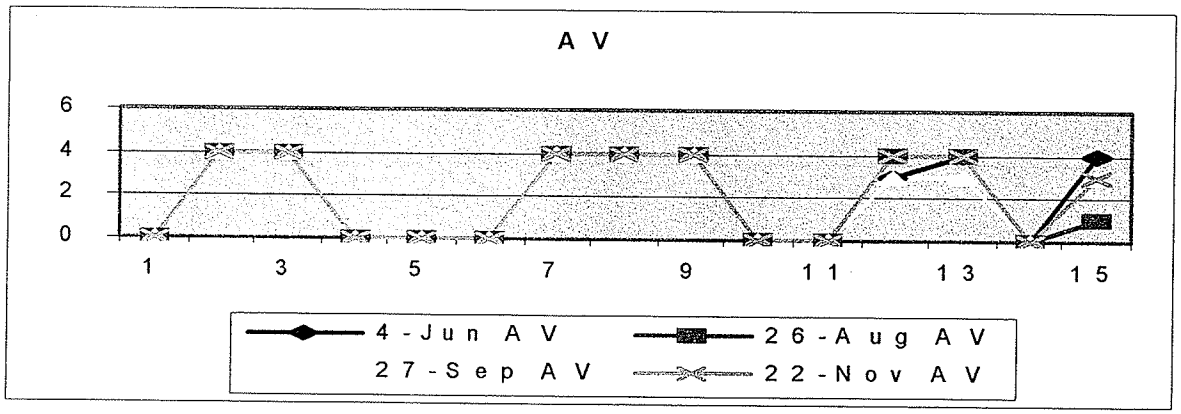

Hope's IES scores of T1, T2, T3 and T4 were above the median. Her scores indicated that she had experienced post-traumatic stress.

Hope's intrusion scores increased in most intrusion items. For example, On item number "6" ("I had dreams about it."), Hope scored "1" (not at all) in In1, but "3" (sometimes) in In2, In3 and In4. This change indicated that she had intrusive thoughts and could not cope well with her sexual abuse.

There was no increase in the scores of two intrusion items. On item number "1" ("I thought about it but I didn't mean to."), Hope scored "2" (rarely) in In1, In2, In3, and

In4. On item number "11" ("Other things kept making me think about it."), Hope scored "3" (sometimes) in In1, In2, In3, and "2" (rarely) in In4.

In short, Hope's intrusion scores indicated that her intrusive thoughts increased in In2, In3, and In4. When she was writing In2, In3, In4, she was unhappy because of her family and peer issues. These factors could have adversely affected her coping with sexual abuse.

Hope's avoidance score decreased from 31 in Av1 to 29 in Av2 and Av3, but increased to 31 again in Av4. Her avoidance scores fell between the range of "3" (sometimes) and "4" (often), but closer to "4" (often).

Instead of dealing with her sexual abuse, Hope used avoidance to cope with it. On item number "7" ("I stayed away from reminders of it."), Hope scored "4" (Often) in Av1, Av2, Av3, and Av4. On item number "12" ("I was aware that I still had a lot of feelings about it, but I didn't deal with them."), Hope scored "3" (sometimes) in Av1, "4" (often) in Av2, "3" (sometimes) in Av3 and "4" (often) in Av4.

Hope's avoidance scores reflected that the lack of family support might have hampered her rehabilitation. Hope was too preoccupied in coping with the stress from her family and her peer issues that she had not dealt with the feelings of her sexual abuse.

Table 5.8: Lucy's scores of Index of Self-esteem & Beck Depression Inventory

Index of Self-esteem (ISE)					**Beck Depression Inventory (BDI)**			
Pre-test	Post-test	Pre-test	Post-test	Cutting score	Pre-test	Post-test	Pre-test	Post-test
T1	T2	T3	T4	30	T5	T6	T7	T8
25	**33**	25	**36**		13	**15**	11	**22**

Lucy's ISE T2 score might have been affected by Hope's talking back to her parents, Hope's refusal to accept Sam as her father, and Sam's unemployment. Sam was fired from several jobs for stealing from his employers. When Sam got another job in the summer, Lucy thought that they would finally have lasting financial stability. She also considered quitting her job after the baby was born. However, the company suddenly declared that it was unable to open its factory. Thus, Sam lost his job again. Lucy revealed that she and her stepfather felt very disappointed about Sam's unemployment. When writing T3, Lucy may have learned to better cope with this crisis, so her T3 score improved again. Her T4 score increased a great deal. This change might be due to the parenting issues and Sam's continuous unemployment.

When the T1, T2, T3 and T4 scores were compared, I noticed that Hope's sexual abuse was not the most significant factor affecting Lucy's self-esteem. Her T2 and T4 scores may indicate that her developmental tasks, such as her relationships with Sam and Hope, and Sam's unemployment were very important factors that affected her self-esteem.

In reviewing the BDI scores, it is important to remember that Lucy had experienced depression for seven years at the entry of therapy. Her BDI scores increased from 13 in T5 to 15 in T6. The T7 score indicated that she was getting better, but then the score rose dramatically from 11 in T7 to 22 in T8. The T5, T6, T7 scores indicated her depression fell within the range of mild depression (range of 10-15). The T8 score showed that her depression fell within the range of moderate-severe depression (range of 20-29). Perhaps the same factors affecting Lucy's self-esteem also affected her depression. It is observed that the ISE score of T2 and the BDI score of T6 increased

together; as did the ISE score of T4 and the BDI score of T8. As well, the T4 and T8 scores were the highest scores of ISE and BDI respectively.

Lucy's ISE and BDI scores may indicate that her self-esteem and depression problems were correlated. When Lucy's depression increased, her self-esteem problem became more severe.

Clients' Evaluation

According to Hope's evaluation on individual, dyadic, family, and group therapies, she felt that her needs were frequently met in the therapy sessions. She received a great deal of help in dealing more effectively with her problems. She felt nothing had changed in her family but therapy had made her feel happier. The thing she liked best about the group was talking about boys. In contrast, the thing she liked least was talking about problems. She would also definitely recommend the program to her friends if they needed help.

According to Lucy, she joined the project to help alleviate her daughter's CSA symptoms. Since Lucy did not attend individual therapy, she felt that the project had not helped her much in solving her personal problems. She felt that her communication with Hope had opened up a little bit more. The thing she liked most about the therapy was the time spent with Hope. It was because that she always felt depressed and slept at home, whereas during therapy, she and Hope were together and talked with each other. The things she liked least about the therapy were the arguments that she had with Hope, and she was angry when Hope spoke her true feelings about Sam. In my last visit to the family, Lucy revealed that her relationship with her sister, Tiffany, had greatly improved.

IX. Personal Thoughts

I felt that this was a very challenging case and I have learned a great deal from working with this new stepfamily. From my research, I learned what the child was facing and going through in a stepfamily. I also learned about the important issues that should be addressed by the family. By looking through the eyes of a child, it helped me be more empathetic towards Hope and what she was going through.

Lucy was not very motivated when we talked about Sam and her parenting strategies that were adversely affecting Hope's coping with her sexual abuse. Lucy and I also had discussed other problems in her new stepfamily and ways to solve those problems. I believe that when Lucy was ready for change, she would put what she had learned into practice.

During my last home visit in December, 2001, Lucy asked me a very good question. She wondered why working with Hope would not cause other family systems to change. I explained that it would be unrealistic to expect that Hope's therapy progress would substantially improve the family's functioning. This was because the parents had very complicated personal issues they had not dealt with. As well, Lucy and Sam had more control and power over Hope's life and the family environment. Therefore, the parent system had more influence on the child system than vice versa. Although Hope showed some improvements in coping with her sexual abuse, she was still in a vulnerable position. She needed parental love, as well as support and guidance in her adolescence to help her cope with her sexual abuse, achieve her developmental tasks, and adjust to the physical, psychological and emotional changes brought by her developmental stage.

I felt that therapy would have been more effective if Sam had also attended. As discussed earlier, Sam had many unresolved personal issues, such as his CSA problems, a previous broken relationship (his ex-partner separated from him because she was afraid he would sexually abuse their child as a result of his own sexual abuse), stealing from employers and his subsequent unemployment. Sam's family-of-origin and CSA issues might have affected his parenting and the way he related to Hope. As well, his unemployment might have had a negative effect on his relationship with Lucy and on her depression, which in turn diminished her ability to effectively parent Hope and help her cope with the post-traumatic stress of her sexual abuse.

Finally, I was happy that Hope was able to talk about her feelings. When I first met Hope, she was even more reserved than Janice was. After therapy, she was able to talk more openly to her mother about her sexual abuse. She felt that her sexual abuse did not disturb her as much as it used to. In addition, she became more assertive and was able to better communicate her needs with her mother.

Chapter 6

Case summaries of Families C, I, J, K at EHCC

This chapter describes my practicum experience with Families C, I, J, K at Elizabeth Hill Counseling Centre (EHCC). For each family case, I will present a background report, with its information collected through the process of intake, ongoing assessment, and therapy. The chapter also includes reason for referral, presenting issues, treatment goals, and highlights of treatment excerpts. Finally, I will compare the pre-test data of these families.

Family C

I. Reason for Referral

Kitty, an 11 year old Metis girl, was referred by her school counselor for group treatment of her sexual abuse.

II. Family Background

Kitty's parents, Bella and Ken, were in a common-law relationship for about six years. Both were alcoholics. In their relationship, Ken was controlling in Bella's social life that she was isolated from her own family and friends. Bella was unhappy in her life with Ken that they finally separated when Kitty was two and a half years old.

According to Bella, when Ken and she first lived together, their sexual practices were not very normal because Ken was very possessive, obsessive, pushing and controlling. When Bella was pregnant, Ken became addicted to cocaine and his attitudes towards sex became strange. He had become less obsessive with sex, but he read pornography about incest. He suggested that Bella have sex with her brother, but Bella refused. He often threatened her and had attempted violence when she was pregnant. He also cheated on her and slept with different women. Soon after Kitty was born, Bella was asked to take naked pictures and was forced to have sex with him.

A few years after Kitty's sexual abuse, Ken told his mother he had been sexually abused by his biological father. Bella thought that the way Ken related to her during her pregnancy might be due to Ken remembering his sexual abuse.

Bella had a Bachelor of Arts degree. She worked as a receptionist to support the family.

Kitty's Child Sexual Abuse

After Bella and Ken separated, Ken became very involved with cocaine. It resulted that he lost his job because his job performance was adversely affected by his drug abuse. Ken visited Kitty four or five times under the supervision of Bella's friend. However, her friend did not think that Ken would sexually abuse his own daughter, so she often left them alone in the bedroom.

Bella did not know when Kitty's sexual abuse started, but felt that Ken did not like Kitty and jealous of her attention to her. Before they separated, Kitty was moody, and the sex practice at home was strange. After they separated, Kitty started to have

nightmares and was always crying. At that time, Bella thought that Kitty was crying because of the nightmares.

When Kitty was three or four years old, Kitty drew alligators and blood in the Day Care Centre. Bella took Kitty to the Protection Centre for sexual abuse assessment. Its results confirmed that Kitty had been sexually abused. Kitty was referred to C/FS when she was five years old.

Significant incident that affected Kitty's coping with her sexual abuse

According to Bella, she met Ben on the Internet in 1999. Ben lived in St. John's and was going through a divorce procedure. After six months, Ben moved to Winnipeg and lived with her family in February, 2000. Kitty liked Ben and listened to him. Three months later, Ben missed his sons and returned to St. John's.

In September, 2001, Bella and Kitty moved to St. Johns to live with Ben. There, Bella discovered that Ben had hidden many things from her. Ben had serious depression and other health problems. Bella felt that she would not be able to take care of him on a long-term basis. Moreover, she felt she was unhappy living in St. John's as she could not find a job. In December, 2001, Ben suggested that Bella and Kitty returned to Winnipeg and promised he would soon unite with them. However, in March, 2001, he told Bella he was going to stay in St. John's so that he could live close to his sons.

Kitty was angry about the "Ben incident" and felt that her mother was being abandoned. In Winnipeg, she did not hand in homework and had behavioral problems at school. As well, she did very poorly in her school subjects. Bella thought that the "Ben incident" had triggered memories of her natural father who had betrayed her trust.

Bella's child sexual abuse

Bella is a sexual abuse survivor. She was sexually abused by her biological father beginning when she was five years old. This sexual abuse lasted for about five years. Bella was not exactly sure what her father had done to her, but she believed, at a minimum, it involved at least inappropriate touching. Her abuse had affected her self-esteem and her selection of mates. She tended to develop relationships with men who only wanted sex or were abusive to her. To deal with her CSA issues, Bella had received counseling at a social services agency and attended a Mother's Group run by C/FS.

III. Presenting Issues

According to Bella, a psychiatrist at Health Sciences Centre had assessed that Kitty had depression and post-traumatic stress. Kitty needed to take anti-depressants daily. Kitty would easily catch a cold. She also wanted attention at school. In the last few weeks of class, Kitty told other children about her sexual abuse in order to get their sympathy. As well, she often swore at her mother.

Since March, 2001, Kitty was seeing a private practitioner to deal with her adjustment issues and to help her cope with the "Ben incident". In early July, 2001, Kitty shoplifted at a food store. She claimed that her stealing behavior was caused by the flashbacks of her sexual abuse. In July, 2001, Bella indicated that the private practitioner had helped Kitty deal with her flashbacks. Kitty would continue seeing her private practitioner on a bi-weekly basis.

IV. Goals of Therapy

Kitty

- (group) To feel better and know that she was not the only one who had experienced child sexual abuse.
- (group) To make friends with others.

Bella

- (Kitty's Group) To improve parent-child communication and relationship.
- (Kitty's Group) To normalize the abuse for Kitty and make her feel less shameful about it.

V. Treatment Process

In working with this family, I think one of the biggest challenges was to engage the family for therapy. It was very difficult at the beginning. Bella did not have confidence in a student project while Kitty had a previous bad experience with a therapist from the public sector. Kitty failed to attend all the appointments with me at the agency before I visited the family.

I met Bella twice in June and July, 2001 at EHCC. To enhance Bella's confidence in this project, I conducted counseling right from the first interview. During therapy, I explored the following: her previous relationship with Kitty's father and their sexual practices, whether they had consumed any drugs or alcohol and its impacts on Kitty's growing up; the parent-child relationship; the parenting issues; and how she cope with Kitty cope with her CSA trauma.

I observed that Bella had tried very hard to make sense of why sexual abuse had happened to Kitty. Effects questions were used to discuss how the perpetrator's personal issues and their family relationship may have led to Kitty's sexual abuse; and how Kitty's sexual abuse had affected the family and her coping with Kitty's abuse.

Coping questions and scaling questions were used to understand her coping. Strengths questions were employed to highlight her success in coping. We discussed how life would be different when there was no abuse and when her ex-partner no longer live with the family. I explored whether Bella put the blame on herself for not being able to protect Kitty. I affirmed her that she had tried her best as Kitty's protector.

In the discussion of the "Ben incident", I noticed that Bella had not got over her separation from Ben. She still missed Ben and was unhappy in her new relationship. We discussed her feelings after the break-up and her relationship with Ben when living in St. John's. Bella preferred to start a new life in Winnipeg.

Regarding parenting Kitty, Bella revealed that Kitty was often successfully able to make her give in. We discussed boundary issues in parenting.

As Kitty had a trust issue, I paid a home visit to the family in July, 2001. During the visit, Kitty was suspicious and asked me why I visited her. She also asked, "Do you do it only to me?" I explained I visited every family of my project. I briefly mentioned the statistics of child sexual abuse of both boys and girls so that she would not feel she was the only one who was sexually abused. I affirmed her that the abuse was not her fault. I continued to learn about what Kitty liked and what she did not like. When we communicated at a deeper level, Kitty revealed that she missed Ben and she liked Ben

more than her mother's current boyfriend. I asked her if she wanted me to visit her again. Kitty preferred to visit the agency with her mother in September, 2001.

Later, Bella told me that she was very proud of Kitty's behavior during my visit. At first she was worried because Kitty had a very bad experience with a counselor. Bella felt that Kitty treated me very well for she talked with me and gave me a piece of cheese. I agreed with her. Bella revealed that Kitty only gave one comment about me, "She is overprotective of the cats."

Bella requested me to visit her family again after their family guest (her new boyfriend she met on the Internet) had left for Ontario in mid-September. In my second visit, I clarified with Kitty her worries about the group. After clarification, Kitty agreed to join the group.

In a group session, Kitty stole some money by the copy machine at the agency. In mid-October, 2001, Bella arranged Kitty to attend one individual session with me. In that session, Kitty drew a genogram and an eco-map. Kitty was angry when she mentioned that her step-grandfather did not like her mother for ignoring his advice to separate from her father. I explained to Kitty that her step-grandfather cared about her mother and her, therefore he did not like her mother to live with her father. When Kitty disclosed that her father abused her and her natural grandfather abused her mother, she felt sad and did not want to talk about it. Then, Kitty showed me a paper signed by her teachers. She had behavioral problems at school and needed her teachers' signatures and comments on her behavior. Kitty got three outstanding remarks that day. I praised her and she looked happy again.

VI Personal Thoughts

I observed that Kitty had some CSA issues that could be better dealt with in family therapy. As she was already seeing a private practitioner bi-weekly and was too busy with her summer activities, Bella preferred that Kitty would attend only group therapy. While showing respect to Bella's decision, I also informed the family about the counseling service of this project.

The use of NT and S-FT was very helpful to understand Bella's perception of Kitty's sexual abuse and the "Ben incident". During therapy, Bella talked about her feelings and found the preferred story for her future. As well, the joining process worked very well with the family. After I had established a trusting relationship with Kitty in the home visits, Kitty was willing to join the group. Kitty enjoyed the therapy at the agency and was able to disclose her inner feelings.

Family I

I. Reason for Referral

Terri, a 14 year old Aboriginal teenager, was referred by her previous school counselor for individual counseling, with a view that she might attend group therapy. Terri was a grade 9 student.

II. Family Background & Child Sexual Abuse

According to Terri, her real parents were divorced when she was two. Her older brother went to live up north with her paternal grandparents. Her paternal grandmother was a medical doctor, her paternal grandfather taught in a college; and both of them had a good influence on the grandchildren. At her young age, Terri chose to stay with her mother. In 1990, her mother lived with her stepfather. Her stepfather sexually abused her by touching her inappropriately when Terri was five and the abuse lasted for about two years. When the abuse started, her mother was pregnant by her stepfather. Her mother gave birth to her half-sister, Dora, in the following year. After giving birth to Dora, her mother became pregnant again and gave birth to her half-brother, Jason.

Terri claimed that she told her mother about the abuse right after it happened. However, her mother did not believe her words. In Grades 3 and 4, Terri started to have behavioral problems, and moved back and forth between her paternal grandparents' house and her mother's house. In November, 1999, she disclosed her sexual abuse to her Grade 8 school counselor who reported the abuse to C/FS.

Terri's mother had a different story about the abuse. She could not recall Terri ever telling her about the abuse when she was five. She only learned about it from Terri's

C/FS worker after Terri's disclosure in Grade 8. After that, she had mixed feelings and did not know what to do. She and Terri did not really talk about it at home.

After Terri's disclosure in 1999, her mother continued to live with her common-law husband. Terri acted out a lot at that time. Terri's natural father helped her move into a group home for a few months. In January, 2001, her mother finally believed in her and separated from her stepfather. In March, 2001, Terri moved up north to live with her paternal grandparents. However, not long after she got there, she found her brother had committed suicide by hanging himself in her bedroom. She felt guilty for not being able to save him.

Family Relationships

According to Terri, although she loved her mother, she could not communicate her feelings and her personal experiences with her. She felt that her mother was too busy with her studies and had no time to listen to her. She felt lonely. Terri wished that her mother could spend more time with her.

After her mother and her stepfather separated, Terri improved her relationship with her siblings. Terri's natural father was a counselor at an Aboriginal agency. He visited Terri almost weekly.

Both Terri and her mother felt that they could communicate better with Terri's paternal grandparents than with Terri's maternal grandmother who lived close to them. Terri's mother felt that her own mother did not understand the expressions of feelings in English and there were many issues in her life that they never talked about even when she was a child.

Social Support

Terri liked to make friends. Most of her friends were a little bit older than herself. Her cousin, Alice, aged 21, was her close friend and good support. Terri shared her feelings with Alice rather than with her mother. Terri had a boyfriend, Philip, who was eighteen years old and was a student. The family had accepted Philip's relationship with Terri. Terri was using birth control injection and it had caused her to gain a lot of weight.

III. Presenting Issues

Terri disclosed that she was aware she was affected by her sexual abuse. These symptoms included having flashbacks and a low self-esteem. She also could not get over her brother's death.

IV. Goals of Therapy

- To deal with Terri's loss and grief over the death of her brother.
- To improve her relationship with her mother.
- To resolve some CSA symptoms.
- To alleviate her anger.
- (Group) To meet with new people to talk to and learn from other's experiences.

V. Treatment Process

Terri was informed the project was time-limited and there might not be enough time to thoroughly address all her problems. Terri wanted to join the group even after I

informed her that the group members were younger than she was. She wanted to meet new people and learn different perspectives.

Terri's mother requested that the therapy sessions to be conducted at Terri's school in May and June, 2001, and said that she would bring Terri to EHCC to attend group therapy in the fall. Meanwhile, Terri did not feel comfortable attending therapy at an agency and her mother was too busy to bring her in.

The treatment issues we discussed included: Terri's break up with her boyfriend, Philip (later they made up again), her sexual abuse, her attending the court hearing of the offender, the loss and grief over her brother's death, and her relationship with her mother.

S-FT and NT techniques were used in all therapy sessions. In S-FT, scaling questions, coping questions, miracle questions, exceptions questions, and the assignment of home tasks were used. In NT, effect questions, unique outcome questions, landscape of action questions, landscape of consciousness questions, dilemma questions and predicting setback questions were applied.

In this family case, the most challenging areas to work with were enhancing Terri's reconciliation with her mother, and walking Terri through the story of her brother's death.

At the beginning stage of the therapy, the mother and daughter were not available at the same time. I conducted therapy with the child and the mother separately, with the former at her school and the latter at her home. Then, I briefed each party's explanation to the other party in an interview or on the phone to enhance their mutual understanding.

The first treatment issue was to enhance the mother-child relationship. The mother's denial of Terri's first CSA disclosure had caused anger in Terri and adversely

affected how she related to her mother. She felt that it was difficult for her to talk to her mother because there was a lack of trust in their relationship.

To help Terri make sense of her life and be more able to forgive her mother, we hypothesized that her mother's denial might be due to various reasons. First, Terry's mother did not realize how her denial could have affected her. Second, her mother still loved her partner very much at that time and could not leave him. Third, her mother needed to have a father for her two younger children. Finally, it was too painful for her mother to face what Terri told her, so her mother dealt with it by blocking it out. Terri was especially receptive to the hypothetical explanation that her mother may have worried about how the separation could affect her younger siblings. During therapy, Terri developed a new perspective that she could not change the past but could focus on developing a better relationship with her mother. I encouraged Terri to talk to her mother directly about her denial or any unfinished business when they felt ready.

I also explored what hurt her most in the relationship with her mother. Terri admitted she felt angry with her mother because her mother did not believe in her when she first disclosed the abuse. She was even angrier when her mother got a warning note from her stepfather's ex-wife in 1990, but her mother did not follow the note's advice. The note warned her mother to be careful with her stepfather because he sexually abused his own (ex-wife's) daughter and might do the same to Terri. Terri's feelings of anger and hurt were acknowledged.

With the mother, I reflected how Terri felt towards her "denial" and discussed how it may have affected their relationship and communication at home. Meanwhile, I told the mother how Terri felt about her brother's suicide. It seemed that the mother was

not aware that Terri also felt the loss as she did. The mother disclosed that she could not talk to anybody at home. She shared her feelings about her son's suicide with me. She cried and was sad about the loss of her son, especially since his birthday was coming up in a few days. I encouraged her to talk to Terri so that they could mourn and grieve together, be supportive to each other, and develop new hopes and new relationships together. I also encouraged her to talk to her friends.

I worked with Terri to cope with the loss of her brother. Terri was encouraged to talk about what had happened and her feelings about discovering her brother's suicide. Effects questions, coping questions, and landscape of consciousness questions were used to walk Terri through the story and find where it hurt her most. She said the loss and her being not able to save her brother hurt her most. Terri learned that she had done her best when she found her brother and it was not her fault for not being able to save him.

I explored how Terri interpreted her brother's death to make sense of her life. She thought there could be two reasons. One was his ex-girl friend treated him bad. Another reason was his cousin was beaten to death by hockey sticks one month before his death. They were very close and he could not cope with that. Terri wanted to move on, but she also knew that it took time to heal.

On Terri's brother's birthday, I called the family to see how they were. Terri's boyfriend, Philip, told me that the mother and Terri went to Downtown. I was glad that the mother spent her time with Terri on this particular day.

Before Terri attended a court hearing, we discussed the offender's possible sentence so that she could be psychologically prepared. I explored how it would affect her feelings if the offender got only a light sentence or could even get away with justice.

Terri was angry at the possible outcome, but she also heard from her friends that this situation was not uncommon. Terri felt it was unfair but she wanted to move on. Terri and her mother went to the court hearing together. After it, Terri felt relieved to have expressed her feelings in her testimony. She was aware that her mother had understood her more, had learned what she had gone through, and had become more supportive of her.

In my last visit to the family, Terri drew a genogram and eco-map, and we discussed her family supports and priorities in life. Terri received a lot of love and support from her relatives. I also observed that Terri and her mother conversed and interacted more intimately than they did in my first home visit.

In July, 2001, when I contacted the family again, the family had changed their mind and decided that they would not join the project in the fall. The mother felt that she would be too busy with her schoolwork in September and Terri was fine and did not need therapy.

VI. Personal Thoughts

I thought that the Children's Group could not meet Terri's needs because of her level of maturity and her issues were very different from other girls of the project.

Family J

I. Reason for Referral

Stella, an 11 year old Metis girl, was referred by her previous school counselor for individual therapy and group therapy.

II. Family Background

Stella was the youngest sister among the two children. Her eldest sister was Amy, aged 13. Amy was a Grade 7 student. However, she had not gone to school for a few months due to some adjustment problems. When Stella was in Grade 3, her father died of brain tumor.

Child Sexual Abuse

After Stella's father passed away, her mother, Pamela, abused alcohol to cope with the loss of her husband. A few months later, Pamela quit drinking and took the family to start a new life in Alberta. When Stella was in Grade 4, her family moved back to Winnipeg. During a visit to Pamela's cousin, David, Amy and Pamela went to buy treats and cigarettes. In the ten minutes they were gone, David tried to take Stella's clothes off but she refused. He then took Stella's hands and ejaculated on her hands twice. After her mother and sister returned from shopping, they found Stella crying and lying on a bed. The family left the house immediately. On their way, Stella told Pamela about the sexual abuse.

After this abuse incident, Stella became fearful of big guys. Pamela surmised that Stella was reminded of David, who was also a big guy. Stella kept calling Pamela's cousin a *raper*, even though he did not really rape her. Stella's migraines became more serious. Stella brushed her teeth at least twice a day, and each time for at least one hour.

Her teachers commented that she dressed much more advanced than other children of her age and the way she acted and talked attracted men.

Stella revealed that she had flashbacks about once a month, yet they were happening less frequently than before.

Family Relationships

Stella felt that her mother supported her 100%. However, she was not sure how much, her sister, Amy, supported her. Stella said she did not talk much with Amy. Pamela revealed her daughters did not relate well to each other, and thought it might be due to the girls being treated differently by her sister. Pamela felt that her sister was partial to Stella and purchased many gifts for her because she was small and beautiful. However, she felt her sister did nothing for Amy, who was big and tall.

At School

Stella has changed schools a few times after the sexual abuse. Stella was in Grade 6. She did well and had no behavioral problems at school.

Pamela (Stella's mother)

Family Background & Child Sexual Abuse

There were four children in Pamela's family-of-origin. The children were from three different fathers. Pamela's mother later had a son with her last partner, Peter. But, their son did not live with Pamela's family.

Pamela's mother had experienced child sexual abuse. She was an alcoholic and lived with different men at different times. Pamela's natural father separated from her mother when she was three or four years old. After, her mother had many partners, some partners lived with her mother, whereas some partners just visited the house. Pamela witnessed family violence since she was two.

Pamela's mother always drank with her drinking partners at home. After her mother had passed out, her drinking partners tried to sexually assault the children. Pamela had been sexually abused by some of these men, one of her mother's friends, and an uncle. When Pamela was between five to eleven years old, she was raped by Peter. At that time, Peter was about fifty or sixty years old and was married with another woman. He was a daily visitor and raped her every Thursday. She felt very helpless. One of her sisters also admitted Peter had sexually abused her.

When Pamela was nine, she told her mother what Peter had done to her. Her mother twisted her fingers and beat her. Since then, she had never mentioned her abuse to her mother again. Pamela did not tell other people about her sexual abuse because she was afraid of embarrassment. She did not receive any treatment.

Pamela's mother passed away when she was eleven years old. The children lived with their aunt who physically abused them. Pamela's sister disclosed the abuse to the school principal who in turn reported to C/FS. C/FS put the four children into different group homes until they reached the age of eighteen.

When Pamela was eighteen, she worked in a mental health home. She met her husband who was a university student who volunteered there. They got married in the same year. She told her husband about her sexual abuse because she avoided sex in the first year of their marriage. Pamela said her husband was understanding and the family was generally happy.

III. Presenting Issues

According to Pamela and Stella's previous school counselor in May, 2001, Stella was sexually abused by Pamela's cousin when she was in Grade 4. Stella was not allowed to talk to anyone about her abuse before the court hearing. After Pamela's cousin was sentenced in April 2001, Pamela was looking for treatment for Stella.

As observed, Pamela was a very supportive mother. However, her personal issues and illness may have affected her ability to parent her children and help Stella cope with her CSA trauma.

IV. Goals of Therapy

- (Group) To be through with it.
- (Group) To feel better.

V. Treatment Process

Stella's mother was recently hospitalized for arthritis. Her health was unstable and could not bring Stella to the agency. The mother requested that therapy to be provided for Stella during the first class at her school.

I paid six school visits to Stella and one home visit to the family in May and June, 2001. Among these school visits, there were only two times that I could successfully contacted Stella. Stella was ill quite a few times. She missed school in most of June for various reasons. Once, Stella told me she missed school for about one week because the family needed to clean the house after they had set a new alarm system.

During therapy, Stella was very cautious with me. I introduced my project and tried to get to know her. We talked about the myths of child sexual abuse so that she would not have a misunderstanding towards herself or the CSA issue. We discussed her family support to enhance her awareness of the help she could receive and that she was not alone. Finally, Stella learned to externalize her sexual abuse. She named it "Disgusting" so that she would be able to separate herself from the abuse.

Stella was observed to have very good analytical power when we discussed the CSA myths. She was also very assertive when expressing her opinion. I praised her for that. Although Stella was sociable, she admitted that she had few friends and she felt lonely in school.

During the home visit, I noticed that the family felt very unsafe living at the address. They closed all the curtains so that nobody could look in. The house was very dark. Pamela explained that a man threatened to kill her because she refused to be his

girlfriend. This man even tried to get into the house and Pamela showed me the scratches on the windows. However, the police said there was not enough evidence for an arrest.

Pamela talked about her child sexual abuse and her husband's death. She tried to make sense of what had happened. I listened quietly and asked questions to walk her through her stories. As well, we discussed some unresolved issues. Effects questions, coping questions, dilemma questions were used a lot when discussing both issues. In her sharing about her husband's illness, I used unique outcome questions, exceptions questions to highlight the strengths of the family.

Finally, I helped Pamela to look at the positive changes in her life, such as her marriage, her family and her relationship with her siblings. Her strengths of being a supportive wife during her husband's illness and a protective mother for the children were highlighted. Pamela said that it felt good to pour out her feelings and she enjoyed our conversation.

In June, Stella revealed that they would be moving soon and they would go camping a few weeks after the school term. In July, Pamela called and said that she would not be able to attend therapy in the future because she could not walk very well. She also felt that Stella was fine and was not in a critical condition that the family no longer required our service.

VII. Personal Thoughts

I felt that Pamela was not ready to bring Stella to attend therapy. I respected her decision and closed the case.

Family K

1. Reason for Referral

Carla, a 9 year old Metis girl, was referred by a community friend for group therapy for CSA treatment.

II. Family Background

Carla was the only child of her family. Her father was a person of color from Jamaica and her mother was a Metis. Her parents never married nor lived together. Her mother, Garland, explained that her previous sexual abuse had made her not want to get married. Garland had recently felt that she was ready to marry Carla's father and they planned to marry in October, 2001.

Garland was a payroll manager and was proud of the family income in that it supported a stable living environment.

Carol's sexual abuse

Garland did not know when Carla's sexual abuse started. When Carla was three years old, a day care worker found that Carla liked to rub her thigh. Carla disclosed that her grandfather had touched her inappropriately. When Carla was five years old, she received play therapy at a social service agency for about a year.

At School

Carla was a Grade 4 student. According to her mother, Carla was assertive and was always in power struggles with her teacher. Despite this, Carla got excellent grades in her academic subjects.

Parenting

Garland disciplined Carla by taking away her privileges. Although Carla might stamp her foot and cry, she still listened to her mother. Carla was rude to her mother at home, but became very obedient to her during her father's visits.

The mother's child sexual abuse

Garland had been raped by her biological father since she was seven years old. When she was twelve, her grandmother tried to rescue her from sexual abuse and reported her father to the police. Garland was removed from her home to live with her paternal uncle's family. Garland was later inappropriately touched by her two uncles.

When Garland started to work at eighteen, she blocked out her sexual abuse memories. She wanted to be part of her family and thus she reconciled with her father. When Carla disclosed her sexual abuse, Garland's memories of her own abuse came back. She no longer could forgive her father and ended the relationship with him.

Garland had received individual counseling from a social services agency for one year around 1996. She participated in a group facilitated by CF/S's group unit in 1998. Garland said she had not gotten over her sexual abuse and she believed no therapy could help her.

III. Presenting Issues

According to her mother, Carla's CSA symptoms included:

- Carla insisted to have her own way and cried to get what she wanted (Not sure if it's a CSA symptom)

- Sometimes, Carla made people feel sorry for her because of her sexual abuse and made people do things for her.
- Carla hit other children. For example, she had an argument with a classmate. When this classmate brought the argument to the teacher, Carla hit her.
- When Carla was in Day Care, she would say, "I am sexually abused" to get away with punishment when she misbehaved.

When Carla was six years old, she sucked the penis of a four-year-old boy. But Garland thought that it was only a child's play, not sexually acting out.

IV. Goals of Therapy

- (Carla/Group) To feel better.
- (Garland/Group) Carla would know that she was not alone.

V. Treatment Process

I had only two therapy sessions with the family in May and June, 2001. In the first interview, the mother was very concerned about the picture Carla drew in March, 2001. I discussed the picture with Carla. She used many different cartoon characters to represent herself. She explained that the cartoon at the centre meant she was angry with herself because she always broke rules.

On each cartoon, there was a comment, such as:

- Carla is a fat piece of pooh.
- Devil Carla.
- No brains.
- Needs a life.
- Dumb.
- A Bio freak.

- Kill myself.
- I am stupid.
- Wish she were creative.

I tried to understand why she thought that way and affirmed her strengths.

Garland also revealed that Carla was rude to her teacher that day when her teacher would not let her use pictures from the Internet for her class assignment. I explored if she felt the same way when she drew the picture in March, 2001. Carla said, "yes." I showed understanding to how she felt, helped her think of the times when she was not rude to her teacher, and explored how she had done it.

To help Carla realize her sexual abuse was not part of her, I explained to Carla why and how to externalize her sexual abuse. Carla named her sexual abuse "Horror."

Carla liked to join the project and she drew me pictures. Garland hoped that Carla would be accepted to join the Children's Group. However, because we did not have other children of Carla's age, I informed Garland that we were still awaiting referrals for the group.

In the second therapy session, Carla and I had drawn a genogram together. However, in the process, Carla had a power struggle with the adults. Carla insisted that she and her mother draw their genograms in separate rooms. She also refused to discuss her family-of-origin with me. After I had encouraged her, she listened to me.

VI. Personal Thoughts

Garland later called and informed me that Carla would not come back for therapy. She explained that she did not feel comfortable with the agency setting because it reminded her of her previous counseling. In addition, she did not want to participate in

therapy with Carla. I respected her decision. Because this project was designed to work with parents and their children, it was not a feasible option for Garland. To close therapy, I gave Garland the contact numbers of other social agencies that had CSA treatment for children. Garland thanked for the service.

Evaluations of Families C, I, J, K

Table 6.1 : Children's scales: Scores of RSE, DSRS and IES of Families C, I, K

	Rosenberg Self-esteem (RSE)		**Depression Self-rating Scale (DSRS)**			**Impact of Event Scale (IES)**	
	Pre-test	Median	Pre-test	Median	Cutting score	Pre-test	Median
	T1	25	T2	36	31	T3	37.5
Family C: Kitty	12		34			39	
Family I: Terri	12		37			39	
Family K: Carla	16		31			40	

Children of Families C, I, K and parents of Families C, K completed the pre-tests. None of the four families (Families C, I, J, K) had written the post-tests.

According to table 6.1, Kitty, Terri and Carla's RSE scores were below the median. Their scores indicated that their self-esteem fell within a normal range. All of their DSRS scores were either at or above the cutting score. Their DSRS scores suggested that they had reached a clinical level of depression. Their IES scores were above the median. Their scores suggested that they were not able to cope with their traumatic stress (from a specific event or unhappy incidents) and that they had experienced a great deal of intrusive and avoidance thoughts.

Table 6.2 : Parents' scales: Scores of ISE and BDI of Families C, K

	Index of Self-esteem (ISE)		**Beck Depression Inventory (BDI)**	
	Pre-test	Cutting score	Pre-test	Level of depression
	T1	30	T2	
Family C: Bella	29		1	Normal range (scores 0-9)
Family K : Garland	35		12	Mild depression (scores10-15)

Bella's ISE score was below the cutting score, indicating that she did not have a clinical problem of self-esteem. As well, her BDI score showed that she did not have a problem of depression. On the other hand, Garland's ISE score indicated she had a clinical problem of self-esteem and her BDI score suggested that she had mild depression. Both mothers had previously received individual counseling and group therapy. I surmised that their different scores were due to their individual differences in coping with their sexual abuse and other life events. As well, the impacts of their child sexual abuse might be different in its severity and extent that they responded to therapy differently.

Chapter 7

Group Therapy

In this chapter, I will describe the overview and the proposed format of the Parent's Group and Children's Group. I will also present the group process of the actual Children's Group sessions. The session outlines of both Parent's Group and Children's Group are included in the appendices.

I. The Proposed Parallel Groups

The Parent's Group was planned to be a psycho-educational group, which had the characteristics of both a support group and an educational group. A support group focuses providing an interactive, communicative and supportive group process to empower members' coping. An educational group emphasizes learning new skills (Toseland, & Rivas, 1998). The Parents' Group was closest to a remedial group model because most of the sessions aimed at enhancing parents' coping. Its educational portion included sessions 10th and 11th , where parents would learn parenting skills.

In the 11th session, parents would be invited to choose one parenting topic to discuss. This was to allow the psycho-educational group be more flexible and client-centred in its structure (Sayger, 1996).

Members of the Parent's Group were the non-offending mothers of the sexually abused children. The members did not have serious pathological symptoms. However,

they might have psycho-social, emotional, parenting and coping problems. Examples were:

a. Feeling depressed or lacking control over their environment.

b. Having difficulties to cope with the child's CSA trauma.

c. Having difficulties to help the child cope with her CSA trauma.

d. Having a low self-esteem and poor social skills.

e. Having parenting difficulties.

f. Having experienced child sexual abuse.

The Children's Group was a therapy group. It leaned more towards a remedial model where group goals focused on alleviating psycho-social problems or traumatic symptoms of members and improving their coping skills (Toseland & Rivas, 1998).

In this group, members were girls who had experienced child sexual abuse. They were between the ages of 11 and 13 years. Like their mothers, they did not have serious pathological symptoms. Their problems were mainly psycho-social, emotional and behavioral. Examples were:

a. Feeling depressed or lacking control over their environment.

b. Having a low self-esteem and poor social skills.

c. Having flashbacks.

d. Exhibiting behavioral problems, such as being promiscuous, withdrawn, or aggressive.

e. Having a distorted view towards intimate relationships.

In the rest of this section, I will describe: (A) Goals of therapy, (B) Group structure, (C) Group programs, (D) Therapist, (E) Intervention techniques, (F) Using

narrative therapy as the primary intervention techniques, (G) Stages of group therapy, and (H) Evaluation methods.

A. Goals of Therapy

The group goals were deliberately focused and structured. They were (Damon & Watermon, 1986; Courtois, 1988):

Overall Goals of Parallel Groups

1. To enhance parents' psycho-social functioning to cope better with the child's CSA trauma and their daily life situations.
2. To enhance children's psycho-social functioning to cope better with CSA trauma and their daily life situations.
3. To enhance family resilience.

Objectives of the Children's Group

- To provide children with a supportive environment to talk about their feelings and adjustments to daily life coping.
- To discover strengths, supports, and resources of their family-of-origin.
- To help them reduce traumatic symptoms, such as a low self-esteem and feelings of depression.
- To help them resolve conflicting feelings towards the perpetrator.
- To increase their knowledge of boundary issues.
- To help them develop a positive view towards intimacy and marriage.
- To enhance parent-child communication to develop a closer family relationship.

Objectives of the Parent's Group

- To provide parents with a supportive group environment where they can talk about their feelings and adjustments following the CSA disclosure.
- To help parents learn about CSA symptoms to better help their children's coping.
- To increase parents' knowledge of boundaries issues to protect their children from further sexual abuse.
- To discuss parenting skills to enhance family's functioning.
- To enhance parent-child communication to develop a closer family relationship.
- To discuss how to develop healthy, intimate relationships and their impacts on children.
- To discover strengths, supports, and resources of their family-of-origin.

B. Group Structure

The Parent's Group and the Children's Group were closed groups. These groups ensure the familiarity among group members and the stability of the group process by achieving consistent attendance. This would enhance the development of group cohesion and trust within the group, and helpe facilitate the therapeutic process (Courtois, 1988).

Each group was planned to have a maximum of eight members to allow optimal interaction (Toseland & Rivas,1998). Both parallel groups were homogeneous groups. In the Parent's Group, parents shared the same goals of helping their children cope with sexual abuses and learning parenting skills. In the Children's Group, children shared the common goal of alleviating CSA symptoms. Members of each group shared some similar psycho-social characteristics, such as having a low self-esteem. Their similarities

enhanced cohesiveness among group members. Finally, members of each group were all females to minimize the chance of enactment of traumatic feelings or 'transference' towards perpetrators who were of the opposite sex (Toseland & Rivas, 1998).

Both Parent's Group and Children's Group were time-limited groups. Each group had twelve sessions. According to Courtois (1988), the goals of a time-limited group are more focused and its format is more structured than an unlimited-time group. The time-limited format has the following advantages (Sprei, 1986, cited in Courtois, 1988, p.250; Gil,1988; Goodwin & Talwar, 1989; Hansen, Warner & Smith, 1980; Knight, 1990; Kreidler & Hassan, 1992, cited in Richter, Snider, & Gorey, 1997, p.55):

- It is easier for group members to make a time-limited commitment to therapy.
- It helps the group facilitator to plan a clear structured program that is goal-oriented.
- The time-limited nature provides a hopeful optimistic outlook for both parent and child.
- Group members may be more committed to the individual as well as group goals when there is a time-limit.
- It encourages bonding and minimizes resistance to sharing because of the time-limit.
- It engages individuals in long-term group treatment through a succession of such time-limited work.

The parallel groups were to be run on two separate days. The length of each group session was one and a half hours. At the end of each session of the Parent's Group, there was an additional half an hour to discuss children's progress and needs. Each group followed program activities tailored to meet their needs, each program being based on a weekly theme. It was planned to have three joint sessions where the family would attend

group together. They were group sessions 2 (Impact of sexual abuse on children), 8 (Parent and I) and 12 (A brave new future).

C. Group Programs

The program themes of both groups are described as the follows:

Children's Group

Session	Program theme
1	Knowing each other
2	Impact of sexual abuse on children (joined group)
3	Grief and resolution
4	Improving self-esteem
5	Peers and I
6	Discovering family influences in childhood
7	How to establish healthy personal boundaries
8	Parent and I (joined group)
9	The offender
10	Personal safety and protection
11	A positive view towards intimacy & marriage
12	A brave new future (joined group)

Parent's Group

Session	Program Theme
1	Knowing each other
2	Impact of sexual abuse on children (joined group)
3	Parent's grief and resolution
4	Discovering family influences in childhood (1)
5	Discovering family influences in childhood (11)
6	How to develop a healthy, intimate relationship
7	Improving self-esteem
8	Parent and I (joined group)
9	How to establish healthy personal boundaries
10	Parenting
11	Parenting (Special issue)
12	A brave new future (joined group)

D. Therapist

There have been many disagreements whether or not co-therapy is the best practice method (Bernard, 1995; Wickham, 1993; & Toseland & Rivas, 1998). In this project, I was the sole therapist because of the following reasons:

(a) Time requirements were so great that I was not able to find another student therapist to commit to this project.

(b) Scheduling difficulties with other student therapists.

(c) Other practical considerations. For example, this project used S-FT, NT, and SFT as intervention techniques; it would be too complicated to co-ordinate with another therapist when using three different kinds of therapies. Moreover, in SFT, the therapy heavily relies on joining, tracking and the therapist's use of self or involvement. It is difficult to co-ordinate with another therapist when using such skills (Colapinto, 1991).

E. Intervention Techniques

Narrative therapy (NT) was my primary group intervention techniques to working with CSA issues. NT provided a framework to deconstruct the child's problem story and help her develop a preferred story. To deconstruct the problem story, externalizing questions and the effects questions were often used. In the process of re-storying, unique outcome questions, landscape of action questions, landscape of consciousness questions, dilemma questions and predicting setbacks questions were employed.

Solution-focused therapy (S-FT) was used with narrative therapy interchangeably. In S-FT, scaling questions were used to understand where the children were at and their progress in therapy. Coping questions were used to assess how children coped and help them notice their strengths in coping. Miracle questions were used to help them set goals, and exceptions questions were used to help them look at the times when events were not a problem.

Structural family therapy (SFT) was employed to discuss boundary issues, to enhance family resilience, and to strengthen positive interactions in the therapy.

In addition, other techniques or therapeutic activities were used in the Children's Group to facilitate group process and motivate children's learning. They were:

- First, it was the use of feeling words. Some children were not able to describe their feelings. The use of feeling words, given verbally or with the use of "feeling" cards, helped them become able to name and explain the specific feelings they had. Therefore, when discussing their feelings, they would not tend to respond with general comments, such as "Good," "Yes," and "No." Once they learned the vocabularies and how to describe their feelings, the need for the use of feeling words declined.
- In every session, there was a writing activity where the girls wrote a letter for communicating and encouraging each other. Children may break their feelings of isolation by being supportive of each other. Sometimes, they wrote little cards to encourage each other. As well, they wrote to the perpetrators to express their negative feelings and tell the perpetrators the "unfinished business" in their hearts.
- Finally, at the end of each session, there was a gift basket activity. Each girl received a little gift after the session. The little gifts were used to highlight and encourage clients' strengths, their trying hard to learn in the group, and to balance the atmosphere of discussing very serious issues in their lives.

F. Using Narrative Therapy as the Primary Intervention Techniques

In the group process, narrative therapy can achieve the following functions (Dean, 1998): first, to elicit, encourage and make room for new stories; second, to help members understand the meaning of stories from multiple perspectives; and third, to use stories to

promote growth and change. When a member shares her story, other members may be affected by the group interactions and talk about their own stories of a similar life event (Dean, 1998). In the sharing process, they validate each other's pain, and help each other move beyond their stuck stories by co-creating new positive stories to move forward in life (Carbonell et al., 1999; Dean, 1998).

The roles of the group therapist are (Laube, 1998): (a) to use language (such as NT questions) as a vehicle to facilitate members' change, (b) to help members externalise the problems, (c) to explore the effects of problems on members' lives and how they take control over their problems, (d) to help members identify the unique outcomes, their strengths and resources that are within themselves and in their environments, and (e) to construct with members a preferred story which has more flexibility and possibilities about their lives.

The therapist may consider the following suggestions when using NT in groups (Anderson & Goolishian, 1988, cited in Dean, 1998, p.34; White & Epston, 1990, cited in Dean, 1998, p.31-35; Zimmerman & Dickerson, 1993, cited in Dean, p.33; & Dean, 1998; Laube, 1998):

- Provide a group context in which multiple accounts can emerge.
- Establish a collaborative relationship with members and act as both participant and observer in the group process
- Facilitate an environment in which the group can listen, witness and validate others' stories.
- Encourage and expand stories among group members.

- Use series of questioning techniques to explore the problematic accounts and unique outcomes.
- Help externalize problems and co-create preferred accounts.
- Ensure that a therapy story is created.

G. Stages of Group Therapy

The stages of the Parent's group and the Children's Group were to be understood by following a paradigm developed by Garland, Jones and Kolodny (1965). This paradigm describes a group process which evolves through five developmental stages (Garland, Jones and Kolodny, 1965, cited in Laube, 1998,p.233). The paradigm allows the group facilitator to keep track of the progress of members according to the stages of the group. Moreover, the understanding of its stages helps to guide the selection of themes to be applied to each stage of the group process (Laube, 1998).

The five stages of a group process described by this paradigm are (Garland, Jones, & Kolodny, 1965):

1. The pre-affiliation or the joining stage: This is an exploration stage in which group members may experience an approach-avoidance dilemma. Later, they develop a sense of commitment and a trusting relationship.
2. The power and control stage: This stage is characterized by power struggles among members and with the group facilitator.
3. The intimacy stage: This stage is characterized by more sharing and closer relationships among group members, though power struggles may still occur in the group.

4. The differentiation stage: This stage is characterized by a high level of free expression, mutual support and group identity. In this stage, there are significantly fewer power struggles than before.
5. The separation stage: This is the ending stage in which earlier modes of interaction and relationship patterns may be relived. Reviewing the group's learning as well as evaluating therapy and members' therapeutic progress are principal activities.

H. Evaluation Methods

The same self-rating scales used in individual, dyadic, and family therapies were applied in group therapy. As well, the observation method, weekly logs and clients' satisfaction questionnaires were employed.

II. The Actual Group : The Children's Group

The Children's Group followed the proposed format of the Children's Group, with only little variation. For example, in Session 1, the mothers were invited to participate in some activities with the children.

The project provided supper for the families before each group session. The average time for supper was about 26 minutes. Therapy was about two hours in each of the first two group sessions, exceeding the time of the original schedule. It was because the children wanted to share their deep feelings about their abuse that I thought I should let them talk. One mother felt that it was necessary for the children to express their feelings and did not raise any concerns about the length of the group sessions. But, the other two mothers wanted the group to finish earlier so that the girls could be home sooner. So, I tried to finish the group earlier in the later sessions.

III. Group Process

The Children's Group was held in the same therapy room where Janice and Hope attended family therapy at EHCC. This same environment enhanced their feeling of familiarity and level of comfort. There were only four group sessions. Session 4 was repeated so that children who were absent in the first Session 4 could learn what they had missed. All the group sessions were taped. In the following, excerpts of the group process of each session are included.

Group Session 1

A. Topic: Knowing each other.

B. Attendance: All children and mothers were present.

C. Purpose of the meeting:

- To acquaint group members with one another through the use of group activities.
- To provide an opportunity for group members to share their expectations of the group.

D. Group summary

1. Welcome speech

I showed appreciation to parents and their children for their attendance.

2. Check-in activity

All the girls said, "Good."

3. Warm up activities

(a) "Knowing each other"

During the activity, the girls interviewed each other about their hobbies, their favorite animals, the people they liked and the people they did not like. When they talked about the person they did not like, they found something in common that they all disliked their perpetrator. Since then, they had become very supportive of each other.

(b) " Knowing your name: You are important"

The girls shared the meanings or the origins of their names. "Kitty" meant "strong", "muscular woman". Janice was named after her mother's favorite star. "Hope" meant flowers in Scotland. Hope was also named after her mother's friend.

Their mothers were invited into the group to explain the children's names. This was to reinforce the girls' identity and their sense of importance. The mothers did not talk to each other but responded primarily only to their daughters, whereas the girls laughed and talked together.

I summarized the meanings of their names to intensify the message that they were important. Kitty was happy. She looked at her mother and made a funny face, putting a pen inside each of her ears.

4. Group discussion "Myths of child sexual abuse"

The girls suddenly became aware of the camera and felt uncomfortable with it. After I had explained the use of recordings in the sessions, the girls made funny faces to the camera.

At the beginning, Hope was sitting separately from Janice and Kitty. I told the girls that they could pass if they did not want to talk. Hope and Kitty answered many questions about the myths of child sexual abuse. Janice was quiet. As the discussion progressed, all of them sat by each other on the same sofa.

During the discussion about the myths of the perpetrators, Kitty suddenly became hyper. She laughed and laughed. Janice identified herself with Kitty and started laughing with her. I told them to relax. Gradually, they were able to calm down. Kitty disclosed

that her grandma, mother and uncle all had experienced child sexual abuse. Simultaneously, Hope revealed that her mother and grandmother had had the same experience. I explored how the girls felt towards their mothers' child sexual abuse. Hope felt that her mother would understand her more. Kitty felt the same and believed that her mother became more supportive because of her own sexual abuse. Regarding their regrets in their abuse, both Janice and Hope felt guilty for not telling their mothers earlier.

Kitty revealed that she was raped and drugged. Hearing Kitty's experience, Hope wondered if she and Janice were drugged. Kitty added that she was sexually abused by her father in his previous girlfriend's home while her mother's friend was supervising the visit. While Kitty was disclosing her sexual abuse, Janice supported Kitty by helping Kitty to unlock her hair. I checked with Kitty if she was feeling all right when talking about something that deep. I asked, "Is it hard to talk about it?" Kitty said, "not anymore."

When Kitty told the group that she was going to court, Janice suddenly remembered Owen was not sentenced. Hope rose from her sleeping posture. She and Janice were very upset and disappointed that Owen was not punished. Kitty was playing with her hair and told the girls her dad told her she had no evidence. Hope and Janice said Owen told them the same thing. While the girls were discussing their offenders, they talked at random and interacted in a free-floating direction.

Then, I explored if the girls had any dreams about their sexual abuse. They were very involved in the discussion and laughed a lot about their dreams. Hope dreamed that Owen tried to taste her. Janice dreamed that she met Owen at her aunt's door, but later

she could look at him without fear. Kitty dreamed that her father was raping her until she had six or seven babies.

I explained to the girls that the dreams might reflect that their sexual abuse had affected their psychological state. Kitty disclosed more nightmares about how her father had tried to kill her. The girls became very interested in talking about their dreams.

Then, Janice disclosed what Owen had done to her and Hope during the abuse. As well, Hope disclosed how Owen had seduced her. She told the group the incident where Owen asked her to look under the cover when he was sleeping under it. All the girls felt the incident was very funny and laughed uncontrollably. Hope even suggested that she and Janice should role-play to explain what had happened. Then, they acted out how Owen dragged them. All the girls laughed, holding their tummies for quite a long time.

I asked Kitty if she liked the role-play. She said, "Yes." Then she turned to Hope and Janice, "It happened to both of you and you can talk about it. I didn't know it happened to anyone." The sharing in the group helped Kitty feel she was not alone.

5. Discussed group rules and group expectations

When we discussed the exceptions to confidentiality, I told the girls that situations such as suicide should be reported to the police. Janice disclosed that Owen yelled at her and she tried to cut her wrist. Kitty and Hope revealed that they had similar experiences and they showed their scars to each other. I explored why the girls hurt themselves and helped them with feeling words to express their feelings. I explained to them that hurting themselves could only hurt them more. I wondered if they hurt themselves to get rid of

their pain. Hope said, "I don't even know why I do that." I asked what had made them stop hurting themselves. Hope said, "Mom felt hurt." Janice and Kitty followed, "same thing."

I asked the girls if they felt comfortable with touching because we might touch each other in some group activities. Kitty said, "Touch, touch, touch," and touched the other girls' hands playfully. The girls touched each other to show they were fine with touching each other.

The girls' expectations of the group included: to feel better, because it also happened to other girls, and to make friends with each other.

To promote group identity, I asked if they would like to name their group. The girls named it, "The Hotties." It meant they were "confident and pretty."

The girls suggested that they should exchange their telephone numbers. I reminded them they should have their mothers' consent.

Finally, I explored how they felt about the group with only a small number of people. Kitty said if there were more people, it would be like a class and she would not be able to remember the names. Janice commented it was confusing when there were more people. Hope did not say anything. I felt that Hope wanted a bigger group to meet more people, Kitty felt comfortable with a small group, and Janice tried to identify with Kitty.

6. Letter activity

The girls wrote each other encouraging letters. They were happy when reading the letters.

7. Check-out activity

We did not have a check-out sharing, because the parents were in a hurry to leave. When the volunteer and I sent Kitty and her mother home, Kitty was very happy and gave me a hug at the door.

8. Gift basket

At the end of the session, a little gift was given to each girl to balance the atmosphere of discussing very serious issues about their lives.

E. Group analysis

1. Overall comments on group members

It was observed that the girls accepted each other and were supportive of each other. They trusted each other and shared their CSA experience.

2. Group development

(a) Stage of group

According to Garland, Jones, & Kolodny's paradigm (1965), the group process of this session was characterized by stage 1, the stage of pre-affiliation, and stage 3, the stage of intimacy

At the beginning, the group was in the stage of **pre-affiliation**. During supper, the girls only talked to their mothers. When the group started, Hope and Janice talked to each other. Gradually, Janice talked to both Kitty and Hope, but more to Hope. When the girls

disclosed who they hated in the activity "Knowing each other", the girls knew they all hated their perpetrators and became more supportive of each other.

As the group progressed, they developed trust among each other. They listened to each other's story attentively. They accepted each other's experience and were supportive of each other when breaking the secrets of their abuse. In sharing, they further discovered they had more things in common and they were not the only ones who had such experiences. Gradually, the group entered the stage of **intimacy** when we talked about the offenders and nightmares. They shared their feelings and thoughts openly and freely. There were free-floating interactions in the group.

(b) Intervention skills

I used reflective skills to tune in their feelings. Feeling words were employed to help them express their feelings. During the discussion of CSA myths, I encouraged the girls to express their views. I affirmed their perspectives, clarified some issues and sometimes challenged their views to help them develop a new perspective. NT and S-FT questions, such as coping questions, exceptions questions, and effects questions were used. Mostly, I listened to their stories and facilitated the process of sharing. I showed respect to their sharing and affirmed their strengths.

(c) Achievement of goals

The girls got to know each other better and shared their expectations of the group.

Group Session 2

A. Topic: Impact of sexual abuse on children

B. Attendance: All children and mothers were present

C. Purpose of the meeting

- To discuss how the group members' experience of sexual abuse have affected their psychological, emotional, social, and behavioral aspects.
- To enhance the mothers' understanding of what their children have been going through.

D. Group summary

1. Welcome speech

Welcome parents and children joined the group.

2. Check-in activity

In the first session, the girls tended to follow each other's response. Starting in this group session, children could use feeling cards to help express their feelings.

Two days before this group session, Tiffany complained in a family session that Janice was grounded for talking back to her. Janice's peer influence was explored. Janice was associating with an undesirable adult neighbor. We discussed Janice's friendship and her mother's concern. We concluded that Janice needed a more structured schedule or somebody to look after her when her mother had not returned home from work.

In the check-in activity, Janice said she had a good day besides being grounded. She felt happy with school and friends. Hope said she felt confident, shocked, and love-

struck. Kitty said, "I'm happy because, I'm hopeful." In contrast, Bella felt frustrated while Lucy and Tiffany felt exhausted.

3. Warm-up activities

(a) Communication activity

We discussed the recent positive communication experiences at home. Tiffany was very upset with Janice. She talked to Janice, "Look at me. When we talk, what do you do?" Janice looked away. Tiffany continued, " Do you answer me?" Janice responded, "No." Janice laughed and looked embarrassed. I responded, "Maybe we need to work a little harder at that." I also sided with Janice and stated that there were improvements in their communication, for example, in the discussion of sex education. I suggested the family should look at the small positive changes.

Hope felt that her mother was never home and there was no communication. To encourage Hope, I asked her, "I wonder if your mom and you had time to talk, did you feel you would understand each other more?" Hope said, "Always felt that way." Lucy said, "Very good."

Kitty had been raising her hand for a long time. I asked Kitty what she wanted to say. She revealed that she and her mother talked a lot and she enjoyed it. Her mother responded, "Most of the time."

(b) "How much do I know you?"

In this activity, the mother and the child of each family wrote down the answers to questions that demonstrated how much they knew each other before sharing.

Before the activity started, Janice attempted to sit close to her mother. So, she went to the sofa where Kitty and Kitty's mother were sitting. Janice wanted to sit in the empty space of the sofa, but Kitty jumped to occupy the space and said, "Hey, man!" Then, Janice sat on the side (arm) of Tiffany's sofa, which was a single seat. However, Tiffany commanded, "No, no, sit on the floor." I did not intervene because I wanted to show respect for Tiffany and I feared that she might suddenly blow up. Besides, I thought that children do occasionally sit on the floor and in this instance, Janice was sitting close to her mother.

During the group sharing, Kitty's temper flared. In one incident, when Brenda told us about Kitty's "favorite clothes", Kitty yelled, " I don't have one. No!" Then, Kitty hit her mother with her elbow. Bella didn't respond, but she looked embarrassed. Kitty whispered to Bella and they both laughed. Other group members looked shocked but reacted calmly, as if nothing had happened.

During the rest of the activity, the group had a lot of laughter during their sharing. They enjoyed the time being together.

4. Explored the impacts of child sexual abuse on the girls

When the girls went to the washroom, I showed concern for Tiffany and explored if she was feeling fine. She said she was very tired and felt "low" in that evening, but she would like to stay in the group.

To prepare the mothers psychologically ready for the next discussion, I told them I was going to ask them a sensitive question. I explained that the girls had disclosed they all knew their mothers and some of their relatives had been sexually abused. Lucy

explained Hope's grandmother had told Janice and Hope so that they would not feel they were alone.

I informed the mothers how their children felt towards their disclosures. The girls felt that they were not alone, their mothers understood them more and were supportive of them. I asked if the mothers would mind sharing how their own child sexual abuse had affected their lives and how they had overcome the problems. The mothers could "pass" if they did not feel comfortable with the discussion. The mothers said they did not feel they had problems with sharing.

To summarize, all the mothers shared that their child sexual abuse had affected their self-image, their choice of selecting boyfriends and their relationships in the past. They told the girls that they did not want them go through the same experience as they had and they therefore thought that therapy was important for them.

In the following, we discussed the CSA impacts. I used feeling words, or words that described one's behavioral, social, psychological and emotional aspects to help the girls describe their CSA symptoms. Excerpts of our discussions are as follows:

Therapist : (to Janice) How did "Scary" affect your relationship?
Tiffany: Between who?
Therapist: (turned to Janice) Between you and your friends in school.
Janice: In the last three years, I did not have friends.
Tiffany: Loner.
Janice: But now, I have friends.
Lucy: (to Hope)You're the lucky one.
Hope: (said proudly) Because I'm good to everyone.
Kitty: No one really likes me.
Bella: No?
Kitty: Oh yes, we did a popularity test. A kid was the first. I was the second.

Then, I used feeling words to help the girls express their feelings.

Therapist: (turned to Hope) Do you feel depressed, anxious or worried?

Hope: Yes. In grade one, she counseled me about my temper tantrum. I didn't like that. I got mad at that.
Therapist: Do you feel mad easily?
Janice: Sort of.
Therapist: What would you do when you feel mad? **(coping question, S-FT)**
Janice: Think of happy things.
Therapist: Good for you.
Therapist: (looked at Hope).
Hope: Talk to best friends

Therapist: Do you feel able to trust people?
Hope: Best friends. Had experience with trusting best friends. They are like brothers, except mom.
Therapist: How about Kitty? Do you trust people easily or it's difficult to trust?
Kitty: I don't know. A kind of both. It's difficult to trust. (Kitty talked about her experience.)
Janice: I do not trust. They let you down. (Janice talked about her experience.)

I explored how the trust issues had affected the mothers' relationship issues.

Therapist: How about the moms? How did it affect the boyfriend things?
Bella: I didn't go out with anyone for 7 years. I was 25. Now, 32. Now, I am OK. I didn't trust myself and picked guys who were jerks.
Hope: (laughed).
Therapist: How about now?
Bella: Nathan is good, a nice guy.
Lucy: I had a hard time to trust as a child. But not now.
Tiffany: I trusted, felt betrayed.
Therapist: (praised the mothers for being so brave to share their feelings and turned to the girls). Do you feel alone now?
The girls: (shook their head).

To help the mothers learn more about how the girls were affected by their abuse, we talked:

Therapist: Have you tried to hurt yourself?
Kitty: (showed mom her scar).
Hope: I had a scar.
All the girls: (They were excited to talk about their scars and incidences that they had hurt themselves.)

Janice: (She told the group that she warned Owen if he hurt her, she would run away from home. Owen tried to stop her and said, "No." Janice fled to a restaurant.)
All the girls: (laughed.)
Therapist: Did you tell your mom you wanted to run away?
Girls: (Not tell because they're feeling their mom would be mad.)

Therapist: Did "Black", "Black 1" or "Scary" affect you to feel emotionally numb or have no feeling? **(effects question, NT)**
Hope: (defined the meaning)You can't feel, can't cry.
Janice: I had that feeling. (She gave an example she could not cry.)
Therapist: (to Kitty) Did you have such feeling?
Kitty: I did.

Therapist: Have you had school problems?
Janice: I did. Some kids teased me. I ran away.
Hope: Teacher and I didn't get along. I always get mad at her.

Therapist: How about nightmares?
Kitty: I had a dream yesterday. A guy said, " Help me, help me…he had no legs. I tried to help him." Kitty described the story in detail.
Therapist: Do you think something had affected you to have such a terrible dream? May be the bully incident yesterday?
Kitty: Didn't know.
Therapist: How did you feel in your dream? Were you scared?
Kitty: Yes.
Therapist: (Did not want to spend too much time on dreams) We will share more about it later. Thanks for sharing with us.
Kitty: (to Hope) Your dream!
Hope: Here was my dream. Owen licked me and wanted to taste me. He said, "You tasted good."
All the girls: laughed and laughed.
Kitty: She tasted good. Gross!
Janice: (She shared her recent dream that she saw Owen at her aunt's place and was not afraid of him when she was with her mom.)

Therapist: Did you feel guilty being not able to help yourself?
Hope: Yes, in the past. Couldn't stop.
Janice & Kitty: the same.
Therapist: (Referring to Hope's sexual abuse, "Black") At that time, did you feel helpless. Helpless means-
Kitty: You can't do anything.
Hope & Janice: Yes
Therapist: Now, do you feel helpless?
Janice: No.
Kitty: Nope!
Hope: (didn't say anything. She might still feel helpless.)

Therapist: If I give you a scale of 0 to 10, 0 is you do not trust, 10 is you trust a lot, how would you weigh yourself on the scale? **(scaling question, S-FT)**
Hope: five
Janice: Seven, no, eight.

Kitty: I was thinking.
Bella: I thought you didn't trust people very much.
Therapist: How about the mothers on the trust scale.
Lucy: Six.
Bella: In the past, I was hurt by a few people besides the sexual abuse. I did not trust. Now, with Nathan, I have more trust.
Tiffany: Five.
Therapist: If we have positive experience, the trust level is higher. We're going to that end.
Bella: I didn't trust myself a long time, doubted everything, then found out everything was totally wrong. Now, (silent) yes.

I told the group that we would talk about how to solve the "Scary" problem next time. Hope said, "Yeah."

5. Letter activity

When the girls were writing their letters, Tiffany suddenly cried. All of the girls ran to hug and comfort her, and to show their support. Bella also provided her telephone number to Tiffany, in case Tiffany wanted to talk to her. After, the girls were excited to exchange their letters.

I explored what was bothering Tiffany. Tiffany said she cried because she felt it was too tough and unfair for the girls to go through their abuse experiences by talking about them. I explained to Tiffany that the girls in fact did not feel bad when they talked. In fact, they felt good to express their feelings and they laughed and teased their perpetrators when talking about their dreams. Tiffany did not disagree. She later admitted that she felt embarrassed when the group talked about Owen. I comforted Tiffany that healing took time, even though she was involved in a serious relationship. (That night, while my volunteer and I were sending Bella and Kitty home, Bella commented it was

impossible to ask the girls not to talk about their feelings because they needed to get their feelings out.)

6. Gift basket

Every parent and child received a little gift to show the project's appreciation for their participation and contribution of ideas to the group. The girls were very polite and said, "Thank you." Janice also gave me a hug.

D. Group analysis

1. Overall comments on group members

The girls were happy to talk about their CSA experiences together. However, the mothers seemed to have had a bad day before they joined the group. The girls were very helpful and comforted Tiffany when she cried.

2.Group development

(a) Stage of group

The group was in the stages of **pre-affiliation** and **intimacy**. The interaction of the mothers reflected that the group process was in the stage of **pre-affiliation**. The mothers learned about other mothers by listening quietly and attentively to their stories. They tried to commit to the group by sharing their own stories.

Meanwhile, the girls were close to each other. They shared their sexual abuse experiences and laughed together. The girls' sharing and friendliness towards each other reflected that the group was in the stage of **intimacy**.

(b) Intervention skills

I provided the girls with feeling words and symptom descriptions to help them identify their CSA impacts. Externalizing the problem, scaling questions, effects questions and coping questions were used to help them talk about their sexual abuse.

I feel that the very special part of this session was that mothers could openly talk about their own child sexual abuse with their children. The girls perceived that their mothers were very supportive of them and understood how they felt. The sharing assured them that they were not alone for their mothers had also gone through child sexual abuse as themselves.

(c) Achievement of goals

The goals were generally met. The girls learned how sexual abuse had affected them. The mothers learned more about what their children were going through.

Group Session 3

A. Topic : Grief and resolution.

B. All the girls and Tiffany were present. Lucy worked night shifts and Bella had other plans.

C. Purpose of the meeting:

- To provide opportunities for group members to grieve and say good-bye to their sexual abuse.
- To discuss effective methods to help group members cope with the impact of sexual abuse.
- To enhance group members' awareness of the importance of the present and future, and help them set goals to move forward.

D. Group summary

1. Check-in Activity

Kitty felt "surprised" because she had a boyfriend. Hope felt "ecstatic" because her boyfriend had asked her to go out, "hopeful" about her relationship with her boyfriend, and "confused" because a boy going out with another girl liked her. Janice said, "I'm happy because I forget it ("Scary"), confused because two guys like me but I do not like them."

The girls shared a happy experience and an unhappy experience in the past week. Hope shared that she felt her real father no longer loved her because he did not respond to her e-mails. She said she would like Sam to replace her real father. I wondered if Sam had changed. Hope said, "The same, but I have adapted to him." I wondered if the

improvement in their relationship was due to the fact that Sam had not grounded her recently. Hope said she was not doing anything wrong and she should not be grounded. She also felt that she had not done wrong in the past, but she added, "I started to realize I did a little too much." I praised her for her awareness.

During the check-in activity, Hope suddenly left the therapy room. I thought she was leaving for the washroom. I told her to return quickly. All of a sudden, Janice and Kitty ran after her. They ran too fast and did not listen to my advice to go "one by one". I did not run after them because I feared that it would make noise and disturb other clients whose therapy sessions were in progress. Besides, the girls always went to the washroom by themselves at the agency. At their age, they preferred to go by themselves without an escort. I thought the girls were just adolescents and wanted to go together, and they would return when they finished using the washrooms. However, after the group session, Hope and Janice disclosed that Kitty had stolen the photocopy money by the copy machine.

2. Checked with the girls' coping of the week

I wondered how Kitty felt about her "Black 1". Kitty said, "Scary yet freaky." (Janice named her CSA "Scary".) Hope commented she felt "lonely and bored" with her "Black". Kitty added a new feeling to her "Black 1". She said, "Ashamed!" Hope followed, "Me too." Janice listened and it seemed that she did not have any coping issues with her abuse.

I explored if the girls had any nightmares. Kitty had a dream. She said, "Ten guys were like a wall of a building, killing people. It's over. I was hiding. I heard, "Help me!"

It's mom's boyfriend." Hope and Janice were excited, "Oh, you told me!" Kitty continued, " He was short in arms, no legs. I helped him." (Bella's boyfriend had lost his legs and used artificial legs.) This dream was a little bit different from her previous dream. Kitty was able to help her mother's boyfriend in the dream.

Janice dreamed that there was a hot guy running after her. She had a tumor in her brain. She ran and fell. Hope dreamed that a dog with razor teeth was running after her and she felt very scared.

We discussed methods to cope with their dreams.

Therapist: In the past, what did you do?
Hope: Slept with mom.
Therapist: Now?
Hope: Now, with grandma.

Kitty: My real dad chased after me. I fell.
Therapist: Could you run away?
Kitty: I crawled. He caught me. I kicked him in the balls. I ran just at time.
Therapist: How did you feel? Were you scared?
Kitty: No.

Kitty still had a lot of nightmares related to violence or to her sexual abuse. In her recent nightmares, Kitty seemed to have become stronger than before. Unlike Kitty, Hope and Janice's dreams were not related to any attacks by their abuser.

3. Discussed how child sexual abuse still affected the children.

Hope said, "...but I didn't like my life because of Owen." She continued, " I don't know. Friends asked me what's wrong. I looked sad... in health class...we talked about other things." Kitty admitted she felt sad and lost and had a lot of nightmares. Janice said, "I actually forget about it. I feel better." I explored if it was hard for her to resist the thought of "Scary" and how she did it. Janice felt it was tough not thinking about it, especially when her mother was emotional and did not eat or sleep in the first

few months after the disclosure. I highlighted her strength that she had tried to take care of her mother. Janice smiled. I reflected her feelings that when her mother was fine, she was fine. Janice said, "Um hmm." Kitty listened attentively.

4. Discussed new perspectives and ways of coping

Hope, Kitty and Janice were sitting on the same big sofa. I explored their coping methods.

Hope: When I remember "Black", I feel sad.
Therapist: What do you do?
Hope: I distract myself from it.
Therapist : How?
Hope: I don't know. Yes, talk to boyfriends.
Therapist: Did you tell them about "Black"?
Hope: But just told them not feeling well, talked about other things.
Kitty: I talked to one girl.
Hope: Girls understand more than boys, but my boys are like girls.
Hope: (to Janice) How about you?
Janice: Forget it.

Hope and Kitty were sitting on the same sofa. Janice sat on a sofa next to them. I asked them a miracle question to help them see how life would be different when they overcame their sexual abuse.

Therapist: If there is a miracle, you discover "Black ", "Black 1", "Scary" are gone, what would be the difference in your life? **(miracle question, S-FT)**
Hope: I'll have confidence, become normal.
Therapist: Even you know it is not your fault, you do not feel confident and normal?
Hope: No.
Kitty: I feel different.
Kitty : My friend said, "I can't have a friend raped, that's so gross!"
Therapist: She is not understanding.
Kitty: No. One day you may be raped. It hurts.
Hope: I never liked Owen, even before he raped me. (Hope used the same word "raped" as Kitty.)
Therapist: (to Janice) Do you feel yourself normal?
Janice: (nodded) I feel normal and different.
Hope: My friend understands me, that's why I like her.

Hope: I have a question. Do they know in your school?
Janice: No.
Kitty: No. (She continued to talk about the friends she did not like.)

The girls were worried that if their schools knew about their sexual abuse, their peers would not be able to accept them. Hope was particularly worried about this.

I used "exceptions" questions in the following conversation to help the girls be aware of the positives in their life.

Therapist: Have there been times when you overcame "Black"? **(exceptions question, S-FT)**
Hope: Yes. I wrote in diary. I was scared. Mom knew it. I wrote in pages she couldn't find it.
Kitty: It's sad to hide the diary.

Therapist: (to Kitty) Have you, sometimes, been successful? **(exceptions question, S-FT)**
Kitty: Yes. I don't know.
Hope: No comment.
Kitty: No comment.
Therapist: (turned to Janice.)
Janice: Think something happy.
Therapist: How did you feel?
Janice: Felt good.

After the discussion, Kitty had taken out a pamphlet about "Teen Touch" and mentioned it to the girls.

5. A role play activity

According to Brower (1996), the two constructivist techniques, narratives and role-play, work well together in a small group setting. The shared group narrative can greatly facilitate group cohesion and group identity. The use of role-play allows members to practice situations and experiment with their new roles, new perspectives and new

interactions in the group, and apply their learning in an outside-group setting (Brower, 1996).

In this activity, the girls were to name a feeling that affected them most and to act out a solution to overcome the named feeling. Each girl wrote her feelings on a paper. Hope felt "depressed", Janice felt "depressed and happy", and Kitty felt the same as Janice.

Hope explained that she was depressed not only because of her sexual abuse, but also because of her mother's depression, and her adjustments to Sam's parenting and his living with the family. Janice and Kitty may have named the same feelings under the influence of peer identification.

Then the girls constructed their stories. In the role play, the girls pretended to be depressed when Owen (played by Hope) approached them. The girls discovered they could solve the problem by calling Teen Touch, who in turn, advised them to report to the police.

This activity allowed the girls to construct their solution, and the experiential nature of the activity reinforced their idea to seek help from Teen Touch when they were assaulted or felt depressed. The girls were very co-operative and had done an excellent job.

6. Writing a letter to the offender

To finish their "unfinished business", the girls wrote and read a letter to their abuser to express their feelings.

Janice told Owen how scared she was during the sexual abuse and felt herself being different because of it. Kitty and Hope swore a lot in the letter. Kitty swore even when she was writing. I reminded them to tell the offenders how they would overcome Black, Black 1 or Scary. Hope said, "I'm trying to overcome the problem and to make things feel better now." Janice said, "Yes." Kitty swore at her father.

The girls liked to hear each other reading their letters. Their letters asked the same question, "Why did you do this to me?" The letters reflected their feelings of hurt, anger and betrayal of trust. As well, Kitty told her father that she wanted him "to say sorry," Hope told Owen that she wanted him to be in jail, and Janice told Owen that she wanted him to go to hell. Finally, each girl said good-bye to her abuse. The girls enjoyed this activity very much.

7. An activity to set goals to move on

In this activity, the girls set their daily goals, intermediate goals and long-term goals to help them have a plan to move forward in their life. Both Hope and Kitty revealed they smoked secretly. They claimed that they were affected by their mother's smoking. Kitty, however, felt it became hard for her to continue smoking since her mother was quitting and she was the only one who was still smoking. Janice said she had quit smoking. When they worked together in filling out the worksheets, they laughed a lot. The contents of their worksheets were illustrated in the following tables.

Table 7.1: Table illustration of Janice's daily, intermediate as well as long-term goals.

	Janice		
	Daily goals	**Intermediate goals**	**Long-term goals**
Family responsibilities	To make my mom happy and try to help around the house!	Be nice	Do my housework when I am supposed to
Family relation	To love her more and respect her more	Be more better in helpful	Aid her more comfort and talk to her more
Academic	To be better in school	Be more studying	To listen to the teacher and not fool around
Fitness	To lose weight	skinny	Be skinny
Social	Be able to go to the movies	Be cool	Be more nice to my friends
Other goals	To be a better person	Take care of people	(No response)

Table 7.2 : Table illustration of Hope's daily, intermediate as well as long-term goals.

	Hope		
	Daily goals	**Intermediate goals**	**Long-term goals**
Family responsibilities	Do chores	Help out a lot	Listen to my parents and get a cat
Family relation	To not talk back and stop smoking	Call Sam Dad	To have a good relationship with my brother
Academic	Do all homework	Get good grades	Get all 100% on my report cards
Fitness	workout	Go to dance	Go to gymnastics
Social	Spend time with boyfriend	Stay with my boyfriend	Stay with my boyfriend
Other goals	To watch Simpsons!	Take care of my brother	Spend time with my brother

Table 7.3 : Table illustration of Kitty's daily, intermediate as well as long-term goals.

	Kitty		
	Daily goals	**Intermediate goals**	**Long-term goals**
Family responsibilities	Quit smoking	Do all my chores Get a dog	(no response)
Family relation	Help more with mom	Be more polite to my mom	(no response)
Academic	Make myself a better student	Do better in school	(no response)
Fitness	Support my mom	Get skinny	(no response)
Social	Get happy	Spend more time with my boyfriend	(no response)
Other goals	(no response)	Quit smoking	(no response)

Hope suggested, "The group should go back to this stuff and check them off. It is a good idea to see how much the girls have achieved at the end of the group."

8. The gift basket

A poster was given to each girl to acknowledge their co-operation and their trying hard to learn in the group. Kitty and Hope gave me a hug.

E. Group analysis

1. Overall comments on group members

Peer identification was important to the girls at this age. For example, they left for the washroom together without my permission. Furthermore, they were early adolescents; sometimes they did act up.

2. Group development

(a) Stage of group

According to Jones and Garland's paradigm (1965), the group was in the stage of **Power and control**. During the "washroom incident", all the girls went to the washroom together despite my advice for them to go one by one. This incident illustrated that there was a power struggle between the therapist and the members. When the girls returned, I explained to them that they should have taken therapy seriously and reminded them of the washroom rules. The girls agreed to abide by the group rules.

In the group, there were no obvious sub-groups or power struggles among the members. All the girls were very co-operative and they liked each other.

(b) Intervention skills

NT, S-FT techniques were used to help the girls develop new perspectives and coping methods. These techniques included externalizing the problem, effects questions, coping questions, exceptions questions, scaling questions and miracle questions.

(c) Achievement of goals

The girls discussed some coping methods. Through the writing activity, they expressed their feelings to their perpetrators and said good-bye to their abuse. In addition, they set goals to move on.

Group Session 4 (a)

A. Topic : Improving self-esteem.

B. Attendance: Kitty, Janice and Tiffany were present. Hope and Lucy were attending a parent meeting at school. Bella had previously told me she had other plans.

C. Purpose of the meeting:

- To enhance group members' self-esteem by identifying their strengths.
- To discuss self-acceptance as a way to enhance one's self-esteem.

D. Group summary

(1) Check-in activity

Kitty said she felt angry and embarrassed. She mentioned that her classmate revealed something to her boyfriend, but she preferred to keep it personal. After some initial attempts to encourage her to talk, I pursued no further since she did not want to talk about it. Janice said that she felt happy and "love-struck" because a boy of the same age asked her to go out with him.

When sharing one thing the girls felt confident about, Janice claimed that she felt better and she did well in Maths. Kitty asked Janice not to talk about school, because she was ill and had not been in school for a while. I showed understanding and we later changed the topic.

2. Reviewed the group theme of last week

I reviewed the group theme of last week and introduced this week's topic, "Improving self-esteem".

3. Discussed how the children had recently coped with their sexual abuse.

Janice suggested that they could think of happy things when bad memories came back.

4. Discussed the definition of self-esteem

Kitty did not know what "self-esteem" meant. Janice said, "Happy" and "don't feel down." I explained the definition.

5. Warm up activities

(a) "You are special"

The worksheet "You are special" was used to enhance the girls' awareness of their strengths. Janice finished the worksheet earlier than Kitty. Kitty revealed that she felt it was boring when Hope was not there. Janice said she felt happy because Hope could not tease her.

When we discussed the worksheet about love and support, I asked, "Who loves Janice?" Kitty was supportive of Janice by assuring her that she was her friend and she loved her. However, when Janice explained her strengths, she also mentioned an example how she had helped Hope cope with the consequence of the "washroom incident". Hope's mother was mad at her and she cried a lot after that. I wondered if Kitty felt comfortable with the discussion. Kitty said, "No." Janice asked, "No?" However, Kitty responded, "Oh, go ahead."

Kitty shared that she was actually not upset about the "washroom incident" but about the stealing. Kitty said she still thought about it. I encouraged her to drop it, but

she said she could not because her mother continued to yell at her for this misdeed. I explained to Kitty that she was not alone in that situation. To show her support, Janice admitted she had stolen before.

When we had almost finished discussing the worksheet, Janice suddenly told Kitty she felt frustrated. Kitty then said, "Oh, you don't like me!" Janice told Kitty that she liked her but Kitty did not let her talk and this made her feel frustrated. Kitty had a temper tantrum and wanted to leave. I explained to Kitty that her mother had told me she had other plans and was not available that night. Besides, Kitty mentioned earlier in the group that her mother was not feeling well. I explained that I would take her home when the volunteer driver returned to the agency. I asked Kitty to calm down and stay with Janice's mother, but Kitty did not want to stay with Janice's mother. Then, I asked Kitty to stay in the waiting area with the receptionists to calm herself down and that I would return to her immediately after talking to Janice. Seeing that peer relationships were important to Kitty, I explained to Janice about Kitty's needs and how to be supportive of her.

About two minutes after Kitty left the room, Janice and I went to see Kitty. A receptionist told me that Kitty had just left. I thought I might be able to find her if I left immediately. At that time, the supervisor was supervising a group on another floor. So, I informed the receptionist about what had happened so that she could inform the supervisor while I went after Kitty. However, I was not able to find Kitty. I called Kitty's mother, Bella, and left a message for her. Later, I got a ride from Janice's mother to look for Kitty. On our way, I called Bella again. Bella answered the phone and told me that

Kitty had a bus ticket. We continued to look for Kitty but could not find her. At the agency, Bella called and reported that Kitty had returned home.

That night, I visited Kitty's family and explained to Bella what had happened. Bella was understanding and said that Kitty had a rough week and was not ready for the group. She also revealed that Kitty felt very ashamed about stealing at the agency and she worried that Kitty would not be accepted by the girls again. I assured her that the girls liked Kitty very much. Bella thought that Kitty would take a long time to cool down but would be fine since she was seeing a private practitioner bi-weekly. I told her that the group would always welcome Kitty to come back. In case Kitty would leave the group, I informed Bella about similar programs in the community.

Bella mentioned that Janice had called Kitty recently and told her that Hope and her mother said they hated her and it made Kitty feel very unhappy. Bella explained that she and Kitty felt very badly about it because Kitty liked them very much. I wondered if it was another misunderstanding.

Since peer relationships were important to the girls, I made a visit to Hope and her mother so that they could clarify the misunderstanding for Kitty. I mentioned to them what Bella had told me. Both Lucy and Hope said that they had not said they hated Kitty. To clarify the misunderstanding, Lucy allowed Hope to write Kitty, but not to phone her. I had brought some letter pads and little encouraging cards with me. Hope wrote on the back of a card which already had written on it, "Tomorrow will be better". As well, promising that it would be an encouraging letter, Hope wrote a private letter to Kitty.

Then, I sent Hope's letter, as well as my letters which highlighted Bella and Kitty's strengths and their participation in the project. Some project souvenirs were

enclosed to assure Kitty that she was always part of our group. One of the souvenirs was a plastic file. On its cover, it had a beautiful adolescent girl, and it was inscribed, "You are forever my friend. Remember the good times we had." I hoped that Kitty would remember the positive experiences and know that she was always welcome in the group. In December 2001, I sent Kitty some Christmas gifts from the project to acknowledge that she was always part of the group.

E. Group analysis

1. Overall comments on group members

When Hope was not present, the group atmosphere was less animated because it had minimal interaction. During a family therapy session (Tuesday) of the same week, Janice learned that it was better for her to explain her feelings to Hope than to give up her friendship with her. Janice revealed in this group session (Thursday) that she had told Hope the day before (Wednesday) how she felt about being ridiculed by her. Janice felt that Hope treated her better after that conversation. Having experienced success in asserting herself to Hope, Janice continued to be assertive in the group. She told Kitty how she felt when Kitty did not want to discuss their strengths.

2. Group development

(a) Stage of group

The group was in the stage of **power and control**. Both Kitty and Janice tried to "control" the situation. Janice tried to assert her right by talking about her strengths. Kitty

tried to "control" the situation by not wanting to discuss their strengths. Kitty also did not listen to my request to stay in the group or with Janice's mother.

(b) Intervention skills

I had tried to discuss Kitty's problems but she refused to talk about them. I respected her choice of wanting privacy. When Kitty was not feeling comfortable with the discussion, I changed the topics. Meanwhile, to be fair with Janice, I let Janice talk about her feelings.

If Hope had been at the group, she would have been able to clarify Janice's phone call and tell Kitty whether or not she and her mother really hated Kitty. The peer support could have made a big difference in Kitty's coping with her argument with Janice. Besides, if all the girls were in the group, more interactions in the group could enlighten the atmosphere.

I did not know Kitty had special issues before she attended group. I had a few phone contacts with her mother, Bella, in the same week. I asked about Kitty but I was not informed that Kitty had any special difficulties except that she had the flu and missed school for one day, and could not attend individual counseling with me that same week. I think that it was important for the mother to provide specific information about the child.

Moreover, the mother's being with the child at the agency is an important support to the child. During a home visit and phone conversations with Bella, I invited her to come with Kitty to the agency. She felt that she had no common topics with Janice's mother, but Hope's mother was working night shifts and could not come with Hope. She told me that she had other plans in the evening when Kitty was attending group therapy.

(c) Achievement of goals

The goals were not achieved because Kitty left the group earlier and the group process was interrupted.

3. The therapist's role

I felt that I was a mediator between Janice and Kitty in this group session. I tried to help Janice and Kitty to be supportive of each other when they had conflicting views towards sharing.

4. Planning for the next meeting

The next meeting was repeated to discuss the same topic, "Improving self-esteem". It was because this important topic helped prepare the girls to understand other related topics, such as "Peers and I", and "A positive view towards intimacy and marriage".

Group session 4 (b)

A. Topic : Improving your self-esteem.

B. Attendance: Hope, Janice and Tiffany were present.

3. Purpose of the meeting

Same as group session 4 (a).

D. Group summary

1. Check-in activity

Hope looked bored. She commented, "Don't like it! Boring!" Janice said, "Same with her." Hope wanted Kitty to come back, whereas Janice wanted Kitty to come back only if she would not run away again. To calm them, I explained to them that I had sent a letter to Kitty on behalf of the group and I told the girls the content of the letter. The girls wanted to call Kitty. I reminded them they needed their mothers' consent.

In this session, Hope was not happy but was unwilling to explain her feelings. Excerpts of our sharing included the following:

Hope: (using feeling cards) frustrated, anxious, ashamed, depressed, lonely, confused, angry, enraged, hopeful (She felt hopeful for she will dance with her new boyfriend. Hope did not want to explain her other feelings.)
Hope: Something's going on with me.
Therapist: What is it? (and I repeated the feelings she named.)
Hope: Enraged, with parents. (Hope didn't want to talk about it.) Janice leaned on her shoulder.
Jealous, a friend tried to go out with my boy friend.
Therapist: Did you explain how you felt?
Hope: Yes.
Therapist: Did he go?
Hope: No.
Therapist: (I did not push further since Hope did not want to talk more. I turned to Janice.) How about you?
Janice: Happy.
Therapist: (I encouraged her to explain.)

Janice: Happy because I have a new boyfriend.
Confident. I don't know why.
Therapist: (probed if it's because of her improvements in school).
Janice: don't know.
Ecstatic. Hope to dance with a guy.
Therapist: Thank you.
Therapist: (asked the girls to name one thing they do well or they do not do well).
Janice: I feel myself pretty.
Hope: (tried not to laugh).
Therapist: Can you explain how it happened that you feel you're pretty.
Janice: Last week, I looked into the mirror and I suddenly felt I was pretty.
Therapist: It's OK to feel yourself pretty.
(To affirm her, I suggested if she would like to tell the group aloud that she was pretty.)
Janice: I am pretty. (She said it bravely and loudly.)
Hope: (became more serious not to laugh).
Therapist: (turned to Hope).
Hope: None. May be my music. I played tuba.
Therapist: Good for you. How did you feel when you play?
Hope: Happy.

Hope looked very depressed and bored. I felt I should not continue the discussion and I went over to give her a hug. Janice also gave Hope a hug. I tried to probe what was bothering Hope and address her problem before continuing the group activities.

Therapist: Can't talk about it?
Hope: Nothing. With my parents.
Therapist: Do you want to cry?
Hope: Don't want to tell adults.
Therapist: Let me try to make sure you are OK. Were you hurt? Or attacked?
Hope: Something personal.
Therapist: I respect you. If you don't want to tell adults, it's fine. But if it bothers you, it's good to let it out and find a solution.

Janice and Hope whispered to each other. I looked at Hope.

Hope: Personal.
Therapist: I'm sorry. I don't understand if you don't tell me.
Hope: OK. Tell you something, but I don't go into it.
Therapist: OK.
Hope: Parents got mad at a cousin's place. Parents assumed something and I did not do it. Parents don't trust me!
Therapist: (I probed.)
Hope: OK. Tell you. Don't tell my mom.

Hope gradually disclosed the "Anthony Incident". A week ago, her mother's partner, Sam, thought that Hope and her friend, Anthony, kissed. Anthony was about 17 years old. Sam warned Anthony, "You stay away from my daughter and don't ever touch her again." Anthony took off. Hope's feelings towards the incident were explored. She felt angry and embarrassed. Hope remembered, "After it, I cried and cried. My parents did not trust me. I asked why, why, why?" I explained to her how her parents might view the incident differently because they cared about her.

I explored the consequence of the "Anthony Incident".

Therapist: Were you grounded?
Hope: They don't ground me, but they ignore me.
Therapist: (I encouraged her to talk to her mom.)
Hope: I don't like my mom.
Therapist: Maybe this is a misunderstanding.
Hope: It's a misunderstanding.
Therapist: (turned to Janice for her perspective to help Hope) How about Janice?
Hope & Janice: (talked to each other in their ears).
Therapist: If your mom misunderstood you, would you explain to her?
Janice: No.

To illustrate the problem of misunderstanding could be solved, I reminded them of Janice's recent successful attempt of sharing with Hope about how she felt towards her "mean" comments. Janice laughed.

Then, I explored how this misunderstanding might have affected Hope and her parents' relationship. Hope and her mother had not talked to each other since the occurrence of "Anthony incident". She invited me to call her mother to clarify for her that she had not kissed Anthony. I promised her but I also encouraged her to talk to her mother directly. Hope felt it was scary to talk to her mother, but finally she agreed to my suggestion provided that her mother would speak to her first.

2. Reviewed the group theme of last week.

   Briefed program theme "Improving self-esteem" of this week.

   I reminded the girls of the coping methods we had learned.

3. Discussed how the children had recently coped with their sexual abuse

   The girls had had no nightmares and felt that their recent problems did not come from their sexual abuse.

4. Discussed the definition of self-esteem

   I simply explained self-esteem as, "It's a way of thinking (e.g. who you are), feeling (e.g. feel you are good) and acting (e.g. believe you can do it). Having a high self-esteem means that you can accept, respect, and trust yourself. You can believe in yourself. It is similar to "confidence" but self-esteem has a deeper meaning in that it also comes from within. It is "how you see yourself.""

   I wondered how the girls interpreted self-acceptance.

Hope : You accept yourself, just as you are.
Hope: Why is it important to accept yourself?
Janice: If you didn't, you'll always be in a bad mood, became "depressed".
Hope & Janice (together): (laughed). ("depressed" is Hope's symptom).
Therapist: Is it important not to feel depressed?
Hope: No. Nobody cares.
Therapist: That's very sad. But we care.

5. Warm up activities

(a) "You are special"

Hope and Janice sat very close to each other and they laughed together. Then they worked on their worksheets quietly. Hope finished earlier than Janice.

On the self-esteem scale of 0 to 10, Hope rated herself at 4.5, and Janice rated herself at 10. Janice looked very relaxed and put her feet on the stool. I wondered if Hope's self-esteem rating was being influenced by the recent incidents that were bothering her.

I explored what had made them feel special. Hope felt that people's compliments, her humor and jokes, and her ability to communicate had made her feel special about herself. Janice felt that she was funny, helpful, and pretty.

(b) "The people you admire"

This exercise was used to help the girls understand the people they admired, such as their family and friends who could affect their self-acceptance greatly. Hope and Janice rated each other at 10 on the admiration scale of 0 to 10.

Hope did not mention her mother but rather her friends as the people she admired. Janice mentioned her mother and a friend, but not her mother's boyfriend. It might support that Hope and her mother's relationship had been strained by the "Anthony incident". It also seemed that Tiffany's boyfriend did not have a very important role in Janice's life.

(c) "Things that I can accept myself and things that I can't accept myself"

Janice mentioned she was good at gymnastics. Hope laughed and commented she never knew that. Hope asked me if she could show me how to do gymnastics after the group session. I thought it was a good opportunity to highlight the girls' strengths. I let them do it right away since they often had to leave right after the group.

6. Discussed how self-acceptance could affect one's self-esteem

I explained "self-acceptance" as, "When you can accept yourself, you can live comfortably with both your strengths and weaknesses without inappropriate criticism. It simply means, "Accept yourself just as you are."" I asked the girls to give examples to help them develop their own perspectives. I also suggested that if they could accept themselves more, they would have more self-esteem.

The girls completed a worksheet about self-acceptance for discussion. This activity was used to highlight their strengths and help them develop new perspectives towards the things that they could not accept in themselves. The girls' responses were recorded in table 7.4.

Table 7.4: Comparison of Janice and Hope's perception of self-acceptance

	Things that you can accept yourself	**Things that you can't accept yourself**
Janice	• I am pretty • I am good at certain thing that other people arn't good at!!!	• that this happened to me with Owen cuz it waz very bad! • that I have a big nose and big feet!
Hope	• Black • Physical appearance • Social relationships • boyfriends	• My family • My school • My height • My weight • White/Race

Hope's response indicated that her family relationship was an important factor affecting her self-acceptance. However, it did not seem to me that she could completely accept "Black" (her sexual abuse). For example, she was still worried that her school

might find out about it. Janice's response indicated that she had developed a positive view towards herself during therapy.

Then, I explored how sexual abuse had affected the girls' self-esteem. Before we started, I told the girls that we were going to talk about something important. This was to help them be psychologically prepared for the discussion. The girls knew it was about "Black" or "Scary".

Therapist: (to Hope & Janice) How has "Black" or "Scary" affected your self-esteem?
Janice: It happened to me. I didn't want it happened. It made me feel different. I don't feel the same.
Therapist: Does it affect your doing things?
Janice: Not really.
Therapist: (to Janice) It made you feel different.
Janice: um hmm.
Therapist: How about you, Hope?
Hope: Same thing. Feel different. They don't have that.
Therapist: Does it make you feel depressed?
Hope: No.
Therapist: Does it affect your feelings?
Hope: No. Yes, in the past.

To explore how the girls feel about other people's acceptance towards their sexual abuse, we discussed:

Therapist: How does "Scary", or "Black" affect other people react to you?
Hope: Nobody knows. Jacqueline accepted me.
Janice: Amy accepted me.
Therapist: If people cannot accept you, what would they do?
Janice: Think you're weird.
Hope: Same.

Therapist: If there were a self-acceptance scale, from 0 to 100, how would you rate yourself?
Janice: 100.
Hope: 50.
Therapist: (to Hope) What would be different if you could accept yourself?
Hope: Feel better, respect.

Therapist: You don't need to tell others about "Black". But, if you tell and they're your real friends, they can accept you, "Just as you are."

To discuss new perspectives, we talked:

Therapist: How may you describe yourself if you can accept yourself?
Hope: Caring, happy.
Janice: Happy, funny, hyper, pretty.
Therapist: (to Janice) Are you happy now?
Janice: Yeah.

We discussed some dilemma situations to learn about the importance of self-acceptance.

Therapist: Some people may not agree with you.
Janice: Like some people I know (looked at Hope).
Therapist: So, self-acceptance is very important. (I gave an example that if other people did not think they were pretty, when they had self-acceptance, they would still believe they were pretty).

Then, we discussed how they could attain self-acceptance at school. Hope said she did not want to try to do it, because she was unhappy with her family. She wanted to give up. Janice said she wanted to try. We considered the consequences of success if the girls tried. We also explored how to think, feel and do things in positive ways.

Finally, to highlight their strengths to conclude the discussion, we talked:

Therapist: (give hints) How would you think about yourself?
Janice: I'm funny, pretty.
Therapist: (to Hope) Can you think something good about yourself?
Hope: (silent)
Therapist: (to Janice) Can you tell her?
Janice: She's nice, pretty, intelligent.
Hope: (laughed heartily when she heard "intelligent").

7. Letter activity

The girls argued who was to use the last piece of paper that had adolescent cartoons. After they had written a letter for each other, they read each other's letter and laughed. Then, I summarized what we had learned in the session. As well, I highlighted

the importance of accepting themselves just as they were, and not caring about how other people might look at them.

(8) Briefed the group theme of next week: " Peers and I".

(9) Home task

The girls were asked to think of some characteristics of their best friend.

(10) Gift basket

The girls liked the encouragement.

E. Group analysis

1. Overall comments on group members

Hope looked bored and depressed at the beginning, whereas Janice looked happy and relaxed. It appeared that Hope lost her usual confidence. When Hope performed her gymnastics, she fixed her eyes on the camera , as if she wanted to show my supervisor she could do well in sports.

2. Group development

(a) Stage of group

In this session, the group was at the stage of **differentiation cohesion**. The pattern of communication in the group did not depend on mutual revelation but on spontaneous response. The girls talked about whatever they liked. The level of

communication was high in the group. Hope and Janice whispered in each other's ear before Hope finally told me her secret. Both girls sometimes tried to identify with each other. For example, when they worked on the worksheet "People you admire", both girls wrote each other as a person they admired, and they rated each other at 10 on the admiration scale of 0 to10.

They had different opinions but they were still close to each other. When Hope said Janice was stupidly cute, Janice did not feel offended. Janice was supportive of Hope when Hope was talking about her unhappy family relationships. The girls displayed a high level of mutual support. When I hugged Hope who looked very depressed, Janice realized that Hope was unhappy and she gave Hope a hug as well. When Hope looked sad, Janice leaned on Hope to give her support. Finally, there were no power struggles, except that both girls tried to get the same letter paper.

This group stage developed possibly because there were only two members in the group. It allowed the girls to have a lot of time for interaction enhancing their cohesion. Moreover, the girls were cousins. Their familiarity with each other and their friendship had possibly increased their tolerance and acceptance towards each other.

(b) Intervention skills

At the beginning of this group session, Hope was very unhappy. I did not proceed with the group, but try to understand what was bothering her. Meanwhile, Janice was very supportive of Hope. I believe that both intervention skills and peer support had helped Hope feel better and become ready to continue group therapy.

As mentioned, both Kitty (during group session 4a) and Hope (during group session 4b) were being insistent about keeping their issues confidential. I respected their privacy for wanting not to talk about their issues. May be they were not ready for the discussions and needed more time to develop trust with the therapist before they would want to reveal certain personal issues.

Moreover, the support of the other group member was an important factor to help the child reveal her problems. Janice had recently experienced success with Hope by asserting herself, so she continued to assert for her rights in session 4(a). Since Janice and Hope were cousins, Janice's levels of tolerance towards Kitty and Hope were different. Janice's different levels of support to Hope and Kitty also affected how Hope and Kitty reacted differently in the group.

I felt that the discussion on "self-acceptance" was especially helpful to the girls. Before therapy, the girls thought that self-esteem came only from people's compliments. They had a poor self-image. Most of them did not have good grades. Some had behavioral and peer problems in school. In this session, the girls learned that self-esteem also included one's self-worth. They learned to appreciate their intrinsic values, but not worry about how other people might look at them or their abuse. They learned that people who truly loved them would also accept their abuse, and that self-acceptance could enhance self-esteem.

During the group process, I found that narrative therapy was very effective in facilitating the discussions of self-esteem and self-acceptance. As well, NT helped the girls discover the positive options in their life and helped them set preferred goals.

(c) Achievement of goals

The discussions had highlighted their strengths, and enhanced their understanding of the importance of self-acceptance.

To note, family has been an invaluable and indispensable factor for nurturing and developing children's self-esteem. In Hope's situation, the lack of family support affected her self-esteem and other areas of her life. As a result, she wanted to give up in school. Hope needed her mother to spend more time with her and be more supportive of her.

In a private conversation after the group, Tiffany requested that Kitty should not be allowed to return to the group. Harshly, she blamed Kitty for her behavior and Bella for not being at the agency. I explained for Bella's absence. As well, I helped Tiffany to understand that Kitty might be reacting to her sexual abuse, and she had not had the advantage of attending intensive counseling as Janice and Hope had in the summer. To help Tiffany look at the positive aspects of Kitty's participation in the group, I told her about Kitty's contributions. For example, Kitty's sharing encouraged other girls to talk about their deep feelings of their sexual abuse.

As advised by my supervisor, I explained to Tiffany that I could not reject Kitty if she wanted to come back; however, Kitty's returning to the group was also very unlikely. I also told Tiffany that if Kitty came back, I would provide individual counseling to enhance her readiness for attending the group. When Tiffany's request was declined, she withdrew both Janice and Hope (her niece) from the group.

In fact, Tiffany had been feeling very frustrated about the other mothers who had not come to the agency since session 3. Previously, Tiffany had asked me in a family therapy session if Janice could leave therapy since Janice had made steady improvements

in every area of her life. In this group session, Tiffany learned that Janice had made great improvements in her self-esteem and told the group that she was beautiful. May be, these factors had also affected her decision to withdraw the girls.

In my third visit to Hope's family, Hope asked why there was no group. With Lucy's permission, I briefly explained my conversation with Tiffany's request and why she withdrew the girls. Hope accepted the explanation, as she knew how her aunt felt towards Kitty. In addition, I discussed the termination of therapy with Lucy and Hope. I informed them how far we had come in reaching the goals of therapy, their strengths, Hope's progress and the areas that needed follow-up. Hope told her mother that she wanted to continue in the group with Janice and Kitty. Lucy commented that because Hope was not ready yet, she felt that Tiffany had quit too early from the project. Lucy also told us that Tiffany would be unlikely to let Janice join the group again, especially since Janice had recovered so much.

During this visit, Hope had some personal issues that required individual therapy and family therapy, so I did not have enough time to finish the termination discussion. However, I asked Lucy to help me give Tiffany and Janice the project souvenirs as well as the narrative letters highlighting their improvements and participation in the project.

In my fourth home visit, I discussed the pre-test and post-test scores with Lucy and Hope. I also informed the family of the community resources and the follow-up services available. I asked Lucy to pass the same message about community resources to her sister, Tiffany. As well, I brought Hope the Christmas gifts from the project. I did not bring Christmas gifts for Janice because Lucy told me there was no need.

IV. Evaluations (Weekly Logs)

The girls' evaluations were invaluable because they reflected how they felt towards the group. However, it seems that when they described the comfort level of the group, they only focused on the comfort level during an undesirable event rather than the comfort level of the whole group session. Their ratings on the scales might also have been affected by how their parents viewed their misbehavior, such as the "washroom incident" and the "stealing" in group session 3. In addition, the weekly logs were not administered at the end of each group session since the children often had to leave with their parents right after the therapy. The children wrote the weekly logs for sessions 1, 2, and 3 in group session 3. Janice wrote the weekly log for session 4(a) in group session 4 (b). Hope wrote the weekly log for session 4 (b) at her home two or three weeks after that group session. Due to the time gap, the girls might not have remembered their exact feelings and experiences, such that their evaluations might not be a total reflection of their learning in the group.

Janice's weekly logs

What Janice liked best about the group was "pizza and meeting other people," "writing letters to each other," "that we eat and have fun and talk," "the group is cool," and "that we get to do fun stuff in the group." Janice liked everything about the group except that in the last group session she wrote, "That Kitty quit group cuz I miss her." She thought that the interaction was "good," "very well," and "it is good and we talk a lot." On the comfort scale of 0 to 10, Janice scored at "10" for session 1. However, in session 2, her comfort level decreased to "0", "Cuz I had to sit on the floor." (In session

2, Kitty wanted to keep the big sofa for her mother and herself, and she refused to let Janice sit by her. When Janice had wanted to sit on the side (arm) of her mother's sofa, her mother told her to sit on the floor.) Her comfort level was "5" in session 3 because of the "washroom incident". Her comfort level was "5" again in session 4 (a) because Kitty was not in the group.

Hope's weekly logs

What Hope liked best about the group was "meeting new people," "I liked to talk," and "being able to talk about things." What she liked least about the group was the early termination of the group. As well, she also hoped that there could have been more time to communicate in the first two sessions. She felt that the group interaction was "good" and "pretty good" respectively. But in session 3, she felt that the interaction was "very bad" because the girls did not behave, resulting in the "washroom incident" and the "stealing incident". She rated her comfort level at "6" in session 1; "4" in session 2 because her aunt cried; "2" in session 3 because of the "washroom incident" and the "stealing incident"; and "8.5" in session 4 (b).

Kitty's weekly logs

What Kitty liked best about the group was "meeting Janice and Hope" in session 1; "guessing the answers to my mom's questions" in a group activity in session 2, and "talking to Janice and Hope alone" in session 3. What she liked least was "when the parents come in" in session 1, "Janice's mom crying" in session 2 and "getting into trouble" in session 3. In session 1, she thought that the interaction of the group was good

because she, Janice, and Hope were together. In session 2, she felt that the group interaction was "good because Janice's mom talked about her feelings and that made her cry." In session 3, she felt that the group interaction was "great because I got to talk to Janice and Hope alone." Kitty's comfort level on the scale was "8" in session 1 "cuz I was nervous"; "3" in session 2 "cuz Janice's mom cried", and "4" in session 3 "cuz I got in trouble." She meant the "washroom incident" and the "stealing incident".

V. Personal Thoughts

When the group was first dissolved, I felt the dispersal was premature. I felt that Hope still had a lot of issues needed to work on. However, I respected clients' choice of when to leave treatment and their perception of the need for service. I felt that I had tried my very best and worked very hard for my clients. Clients had satisfactory therapeutic progress, considering that the therapy had been conducted over a short period of time and dealt with so many diverse issues. The group termination was unexpected, but it was a good learning experience for me because I had never encountered a similar situation before.

Summary

The Children's Group had only completed four of the twelve sessions. In the first three sessions, the girls learned about the myths of child sexual abuse and disclosed what happened in their sexual abuse. They were able to: (a) express their feelings towards their abuse, (b) talk to the perpetrator about their feelings by writing a letter to him and by reading it aloud to the group, (c) develop a realistic view towards the perpetrator's

punishment, and (d) choose to let go of the past and move forward in life. Finally, we also discussed safety plans and some coping methods for the present and future.

The fourth group session discussed self-esteem. At the beginning of the therapy, most of my child clients were not achieving in school and had behavioral problems. They felt that they were "different" because of their abuse and most of them did not have friends. To discuss self-esteem based on achievement would only make the girls feel inadequate. Therefore, when we discussed self-esteem that was based on their self-worth. Consequently, the girls discovered their strengths, which was not based on what they had achieved, but on who they were (their intrinsic value). Finally, they learned that self-acceptance could enhance their self-esteem.

To comment, the Children's Group shared many common topics with the family therapy of Families A and B. These topics included: influences of family-of-origin, the offender, parent-child relationship, boundary issues, peer relationships and a positive view towards intimate relationships. During group therapy, the girls learned together and felt that they were not alone, as they were not the only ones who expereinced sexual abuse. The group dynamics facilitated the therapy process that they became more open and shared their feelings and thoughts at a different level.

Janice and Hope started treatment of individual therapy and family therapy during the same period of time, but Janice had much more improvement than Hope. It was due to the following reasons:

1. Hope experienced more sexual abuse than Janice did. Because of the extent and the severity of her abuse, Hope possibly needed more treatment than Janice.

2. Janice attended 19 therapy sessions; each session included individual therapy and family therapy. I paid one visit to the family. Tiffany attended individual therapy in every session to deal with her personal issues. As a result, Tiffany became better able to help Janice cope with her CSA impacts. Hope attended only 9 out of 10 therapy sessions; each session was consisted of family therapy and/or individual therapy. Hope was not available in session 7. I paid four visits to her family. Lucy wanted therapy to focus only on Hope's issues. However, Lucy and Sam's personal issues were not dealt with, which in turn might have adversely affected their parenting and capability to support Hope in dealing with her CSA trauma and developmental issues.
3. Janice had become happier since Owen (the perpetrator) moved out. In contrast, Hope had to adjust to her mother's partner living with the family, and was almost grounded every day by him. As mentioned earlier, Hope alleged that her sexual abuse disturbed her only in the past, but not now, while her family was the reason that made her feel depressed. I believe that the family factor had a negative influence on her recovery.
4. Although Hope was an early adolescent, she had already had dating issues. She needed her mother to talk to her, to guide her and to help her cope with these issues as well as other life events. Hope felt that her mother was always unavailable when she had such need. In contrast, Tiffany spent time with Janice and talked to her.
5. There were individual differences in Hope and Janice's recovery.

Kitty's therapeutic progress was different from Janice and Hope's. Janice and Hope had attended intensive therapy, but Kitty had not. Moreover, Kitty was being sexually abused by her natural father. The closeness of the relationship in the abuse could

lead to very devastating consequences on the child. Kitty had been seeing a private practitioner bi-weekly after her family returned from St. John's. When Kitty started to steal and claimed that her stealing behavior was caused by the flashbacks of her abuse, Kitty might need a more intense counseling schedule to help her deal with her CSA issues.

It was difficult to measure Kitty's therapeutic progress because she only attended a few therapy sessions. However, according to Kitty, she learned that she was not alone, and she no longer felt bad to talk about her abuse. There were also changes in her dreams. Before she attended group therapy, she often dreamed that her father caught her. In the initial sessions of the group, she dreamed that her father caught her but she could escape. Later, she dreamed that she saved her mother's boyfriend.

To close this chapter, I would like to illustrate the strengths of the girls.

Kitty was very helpful in the group. Together, she and I set the table for supper before the group started. She was very generous and brought her favorite soft drinks to a group session. She was very supportive to Janice and Hope and tried to befriend them. As well, she was kind to Janice's mother, Tiffany. She hugged Tiffany and tried to comfort her when Tiffany cried in group session 2.

During therapy, I noticed that Janice was a very brave girl. She was full of courage. She hit Owen (the perpetrator) with all her might to protect Hope when Owen was trying to molest them. In her nightmares, she tried to rescue her mother from Owen, who was running after them to try to kill them. As well, Janice spoke with courage to express her views. She told her mother how she really felt about Owen, her mother's dating, family relationships and intimacy. Janice was a very caring person. At her young

age, she tried her very best to comfort her mother after the family break-up. In the group, she was supportive of other members. This was evident when Kitty was disclosing her sexual abuse in session 1 and when Hope was revealing her family problems in session 4(b).

Hope was a very loyal friend to Janice. She loved Janice and Tiffany very much by not disclosing the sexual abuse so that she would not break up Tiffany's marriage. Hope was a very assertive girl. She stood up for herself by telling her mother about how she really felt about her mother's partner and the parenting at home. Hope was intelligent and learned quickly about the issues we discussed. Hope was kind. After the group was dispersed, she wrote Kitty to encourage her.

Chapter 8

Treatment of Families R, S, T, U, V at the Family Centre

Overview of Treatment Process

This chapter is about my practicum experience at the Family Centre from December, 2001 to May, 2002. It presents a detailed case analysis of Families R, U, and V, and the summary reviews of Families S and T. It also illustrates how the techniques of solution-focused therapy (S-FT), narrative therapy (NT), and structural family therapy (SFT) were applied in the therapeutic process of all family cases.

Due to the time limit of this project, treatment for project clients was originally scheduled to be six brief therapy sessions at the Family Centre. However, upon the special situations or the requests of Families S, U, and V, I extended therapy to seven or eight sessions for these families. Home visits were also offered to families who had such needs or requests.

In this phase of practicum, family therapy was the primary intervention modality, while individual and dyadic therapies were also frequently used. As well, the treatment focus was parenting issues. Unlike the earlier phase of practicum at EHCC, child sexual abuse was no longer a prerequisite or a treatment focus. Treatment issues of the families varied. They included: parenting, sibling rivalry, peer issues, dating, sex education, family violence, separation and divorce, child sexual abuse, relationship issues, panic attacks, loss and grief.

In each family therapy session, snacks and drinks were provided for the children in case they felt hungry. Family V of five children was provided with hot-meals and drinks in the last four sessions. The reason was that a child of the family disclosed that it was too late for them to eat after therapy and they often felt too tired to eat and went to bed hungry. Since the mother was not able to switch the time for therapy, the project had arranged such provision for the family to make sure the children did not go hungry.

One activity in the therapy involved the child and/or parent writing a letter to enhance parent-child communication. The outcome of the writing activity was powerful.

To close therapy, each family received a Certificate that highlighted their strengths of overcoming or alleviating a family problem. As well, souvenirs were given to the families for their participation in the project. With Family V, we also celebrated with a dinner party.

All cases were videotaped. Families U and V were taped in every session. Family R was taped in every session except the first and the third sessions. Families S and T were taped but not in their last two sessions. Clients were not taped for various reasons. Clients changed their appointments on short notice and all the videotaping rooms were fully booked by other students. The videotape equipment was not available for the session. Family R did not sign the consent form for videotaping until the end of session one. Finally, the mother of Family T had experienced some current crises and she preferred no videotaping in the last two sessions.

I chose Family R, U, and V for case analysis because I directly worked with the children and/or their parents of these families about parenting issues. The discussions of Families R, S, T, U, and V follow the sequence of: (I) Reason for referral, (II) Family

background, (III) Presenting issues, (IV) Goals of intervention, (V) Treatment process, (VI) Evaluations, and (VII) Personal thoughts.

Family R

I. Reason for Referral

Ellen, a 23 year old Caucasian woman, was self-referred to the Family Centre in November, 2002 for parenting difficulties.

II. Family Background

Ellen was the eldest child of three children in her family. She felt both her parents did not love her. Her parents separated when she was nine years old. She lived with her mother but they had a very poor relationship.

Ellen left home to live with her boyfriend, Andrew's family when she was fifteen. Andrew was thirteen at that time. According to Ellen, Andrew's parents were on drugs but they forbade Ellen and Andrew to use drugs. Ellen was not happy in the relationship and in living with Andrew's family. When she was pregnant at the age of eighteen, she left Andrew to live with her paternal grandmother.

When Ellen was twenty years old, she met Justin. They married and lived together for about one year. Because they abused heroine, Ellen's mother reported her to the Children's Aids Society. Consequently, Ellen left Carol to the care of her mother. About half an year later, Ellen and Justin quit heroine so that Carol could be in their care again. However, her marriage with Justin ended when he assaulted her in September, 2001. From this relationship, Ellen and Justin had a daughter, Dolly.

Ellen and her family moved from Ontario six months ago. Ellen worked as a receptionist. She had only a few friends in the city but she had a boyfriend, Bob, aged 36. Ellen said she would like to put her children as the first priority in her life.

Ellen had maintained a very close relationship with her ex-husband's parents, Christie, aged 44, and Ken, aged 35. Christie was a community nurse and Ken worked in the military. They moved to Winnipeg from Ontario about one year ago. They helped baby-sitting Carol and Dolly. They also financially supported Carol in her extra-curricular activities.

Ken disclosed that Ellen was never interested in counseling, but she listened to him and Christie about attending therapy. Ken and Christie were very concerned about the sibling rivalry and worried for Dolly, who was Christie's natural granddaughter. They said Carol beat Dolly because Carol was jealous of her sister. Christie believed that Carol witnessed family violence and her parents using drugs. She revealed that Ellen's family was partial to Carol and would like to take care of Carol but not Dolly, since they did not like Dolly's father. As well, Ellen's mother and grandmother spoiled Carol and there were no rules in their homes.

Figure 8.1: Family R - Carol's Genogram

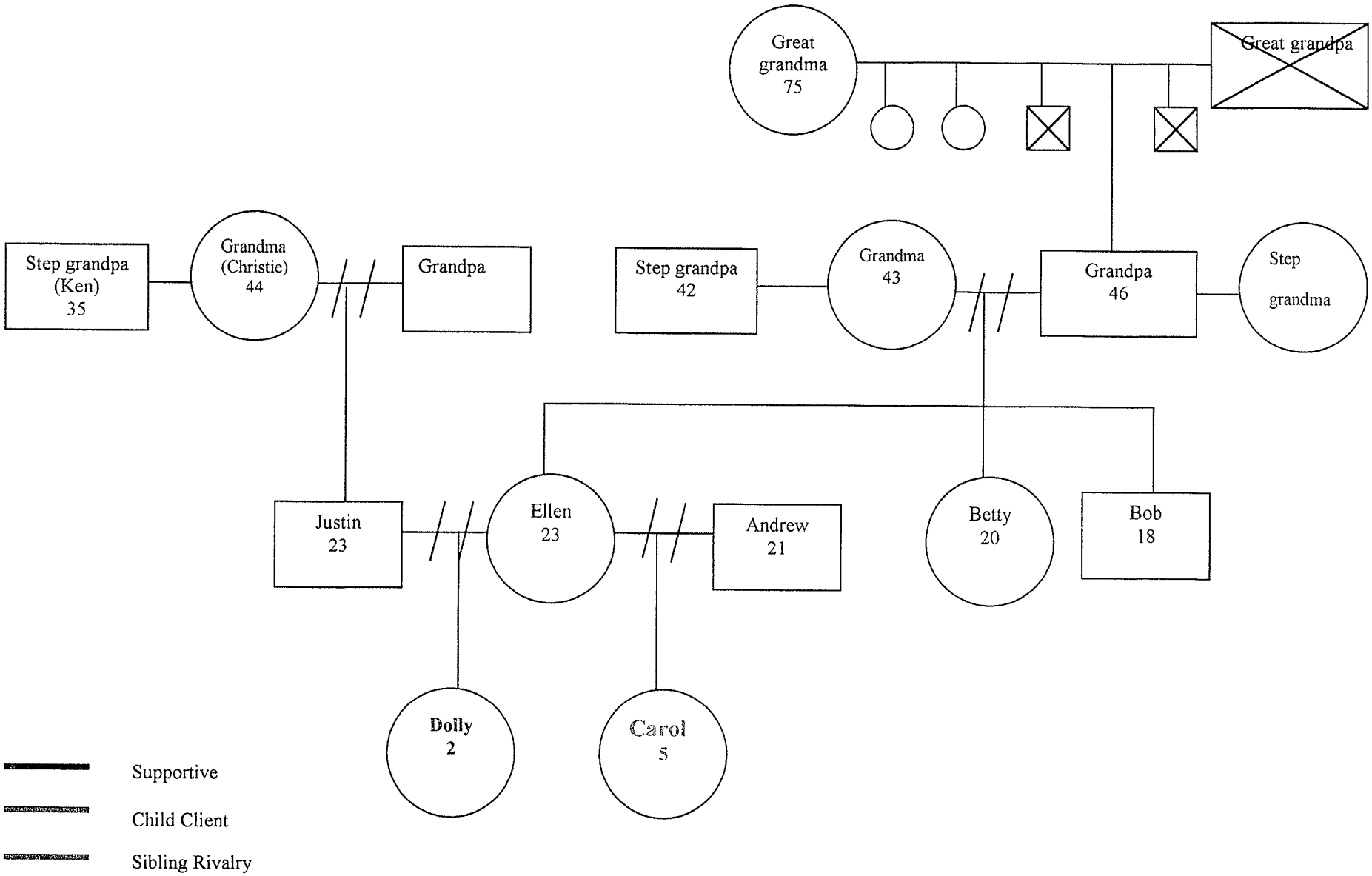

III. Presenting Issues

Ellen's family was adjusting to the new environment with some difficulties. When they first moved to Winnipeg, her eldest daughter, Carol, aged 5, tried to strangle her younger sister, Dolly, aged 2. Ellen felt that her life had become more stable now and Carol's behavior had improved. Now, Carol only fought with her sister. However, Carol often irritated Ellen by testing her limits. For instance, Carol would do what her mother told her not to do and see what would happen. Ellen felt it was difficult to set rules repeatedly since her mother and her grandmother had spoiled Carol.

IV. Goals of Therapy

- To discuss parenting issues
- To alleviate sibling rivalry in the family

V. Treatment Process

Family R attended six therapy sessions over a period of five months between mid-December, 2001 and late April, 2002.

In my original plan, it was believed that empowering the mother could affect family change in a positive direction. Thus, the focus of the therapy was placed on strengthening the mother by discussing parenting skills and her personal issues. The mother's support in the child's coping was very important, especially when Carol was such a young child. Carol needed her mother's continuous nurture and guidance. Moreover, I was not sure if S-FT, NT, and SFT would fit working with a five-year-old.

However, in the course of therapy, Ellen revealed that she was not interested in involving herself in therapy and she started missing appointments. Since Ellen was not

motivated to attend therapy, I shifted my focus to work directly with Carol. In the treatment process, NT and S-FT were used to discuss sibling rivalry. SFT was employed to discuss family roles.

V. Treatment process covered the following:

Session 1

Mother & Carol

- To do intake.
- To discuss sibling rivalry and anger management when the children misbehaved.
- To highlight the mother's strengths.

In session 1, because of Carol's young age, Ellen, Carol and I worked at her pre-tests together. During the discussion of Carol's scores on the Impact of Event Scale (IES), Ellen was surprised to learn that Carol had a lot of nightmares about ghosts. I explored what had caused this. Carol revealed that some boys in her school bullied her and made her feel unhappy. Ellen said she learned a lot about Carol from her test scores. Finally, we discussed ways to solve the problem of bullying and to reduce Carol's nightmares.

Carol responded to me very positively since the beginning of the therapy. When Ellen and I had to discuss some adult issues, Carol often suggested she would play outside. She gave me her hand to let me hold hers. I walked her to the playroom and made sure she was fine playing by herself. The playroom was very close to the reception desk. Carol would talk to the receptionist if she needed her mother or me to take her to the washroom or for anything else. It was observed that Carol enjoyed playing alone in the playroom and that she played quietly.

With Ellen, we discussed some unresolved issues in her relationship with her mother. I explored what she might want her mother to do for her when she left home to live with Carol's father. Ellen said she would have wanted her mother to lock her up when she left home at fifteen, so she could not have lived with her boyfriend. She felt hurt since her mother did not care when she left. As well, she felt hurt because her mother did not have any confidence in her parenting. Ellen hoped that her mother would care about her a little bit more and believe in her parenting.

In discussing Carol's situation at home, Ellen revealed, "Kids play more now than against each other. She's jealous." In parenting, Ellen said, "Carol took advantage of the situation. She cried. I used to give in. Now, I tell her not to. She tests my limits. Usually I would yell at her. Now, stay away. Go up and brush my teeth before I get angry." I affirmed Ellen by agreeing with her.

To highlight the strengths of Ellen, I praised her for putting her life in order, being able to raise the children by herself, and being a responsible mother. Ellen was glad.

Session 2

<u>Mother & Carol</u>

- To use solution-focused/narrative genogram and eco-map to discuss strengths and supports with the mother.
- To normalize the family's struggles and highlight the mother's strengths.

Home visit

- To meet with the family, the granny and the in-laws.
- To observe the family's interaction patterns and assess the impact of home environment on the children.

In the home visit, I met Ellen's family, her grandmother who was visiting from Ontario, her in-laws, and her boyfriend.

Carol had over 150 toys and over 50 Barbie dolls which had just arrived from Ontario. Many of her soft toys were big. According to her nanny, she bought her 20 pairs of summer shoes last year. She spoiled Carol because she was the first granddaughter.

Carol had a fight with her sister, Dolly, in her room. Dolly tried to give me a toy pillow that belonged to Carol. Carol pulled the pillow back and yelled at her. She also refused to play with Dolly. When Ellen gave Dolly the Christmas presents given by her grandmother (Ellen's mother), Carol was unhappy and yelled at her mother, "It is unfair!" Ellen yelled back at Carol and told Carol that she and Dolly in fact had received the same Christmas gifts from their grandmother. Ellen told me that she would put a TV and movies in each girl's room so they would not fight. Ellen said they would not play together and could not stay together. I also noticed that Ellen tended to yell at Carol when she misbehaved and talked back.

Session 3

Carol's grandparents: Ken and Christie

- Ellen's in-laws (Ken and Christie) disclosed that Ellen's background may have negatively affected her parenting and resulted in the sibling rivalry problem at home.

In session 3, Ken and Christie revealed that the problem of sibling rivalry was actually more serious than I had heard from Ellen. They disclosed that Ellen often left the girls at their home. One week ago, Carol hit Dolly's head. Before that, Ken heard that Dolly fell to the floor from a chair and Carol was there. Ken and Christie thought that Carol was jealous.

Session 4

Grandmother & Carol

- To help Carol learn scales and feeling words to express herself.
- To help Carol express her feelings towards her relationships with her mother and sister.

In session 4, Ellen was not available for therapy. Christie (grandmother) brought Carol to the agency instead. At the beginning of the interview, I met with both Carol and Christie. After I took Carol to the playroom, Christie and I talked about Carol's situation at home. Then, I worked with Carol individually. At the end of the therapy, I met with Christie and Carol again, and briefed the treatment process to Christie.

Because I had met Carol three times, at the agency and at her home, Carol felt very familiar with me and she responded very positively. As children at this age typically having a very short attention span, we spent about thirty minutes talking together. NT and S-FT were used in the intervention.

To introduce the concept of a scale to Carol, I asked her if she could count from 1 to 10. Carol did it very well. I praised her. Then, I drew a big scale on a flip chart. To help Carol understand the meanings of "more" and "less", I pointed at the mid-point of the scale, which was a "5". Then, I asked Carol if 1 to 10 were chocolates, was "1" a lot or not enough? Was "8" a lot or not enough? Carol understood the concepts very quickly. Praise was used to affirm her answers. To practice the scales, I asked Carol to pick a feeling card, which contained a feeling word on the cartoon, and I asked how she felt on a scale of 1 to 10.

The following is an excerpt of our conversation about learning feeling words:

Carol: (She picked up a word "ashamed".)
Therapist: Do you know what it means?
Carol: No.

Therapist: It means if you have done something wrong, you feel sorry for what have been done.
Carol: Not a lot of times. I'm usually very good. I only do when my sis is bothering me.

Therapist: Did she bother you yesterday?
Carol: When I was doing homework, she disturbed me, moving around.
Therapist: What did you do?
Carol: I told Nanny. Nanny said, "Would you leave Carol alone?"

To help Carol think of the positive relationship with her sister, I asked:

Therapist: Do you love your sis?
Carol: Yes, she is my sis.

Carol: (She picked a feeling card "happy".)
Therapist: (Carol was not able to read it. I read it aloud) Happy. From a scale from 1 to 10. How happy you are right now?
Carol: 10.
Therapist: Why it's 10?
Carol: I feel happy.

Carol: (She picked a feeling card "angry".) What is it?
Therapist: Angry.
Carol: I felt angry with my sis when she woke me up.
Therapist: How did she do it?
Carol: She shook me awake.
Therapist: Did she tickle you?
Carol: In my armpit.

Carol: (She picked up the feeling card "shy".)
Therapist: Shy.
Therapist: Do you know what it is? Could you explain what it means?
Carol: I was shy when I first met my baby sister at the first time.
Therapist: Are you now?
Carol: No, because she's cute.

From Carol's sharing, it was noticeable that Carol liked her sister.

Session 5

<u>Mother</u>

- To discuss Carol's developmental tasks and developmental needs.
- To discuss stress management and social networks to enhance parenting.

Carol

- To help Carol learn how to express her feelings.
- To highlight her positive experiences with her sister and mother.
- To explore her relationship with her mother.

Mother and Carol

- To discuss family rules and family roles.

In session 5, Carol and I continued to learn feeling words. Carol picked up the feeling cards but she did not understand many words, such as "confident", or "overwhelmed". However, after I explained to her, she learned very quickly.

Carol: (She picked up the feeling card "happy".)
Therapist: Happy. From 1 to 10, how happy are you?
Carol: Seven
Therapist: Okay.
Carol: (She picked up the feeling card "smug".) What is it?
Therapist: That means you think of yourself as right, others are wrong; or you're better than others. Have you felt like that?
Carol: That's not fair. No.

Then, Carol and I played a bubble game. If Carol wanted to talk, she could blow a bubble. I told Carol we would talk about her and Dolly. The purpose of the game was to help Carol talk about her positive as well as her negative experiences at home. The focus was to highlight her positive experiences with her sister and to enhance their relationship.

To explore if Carol sometimes was bullied by Dolly, we talked.

Therapist: Did you and Dolly, did she bully you?
Carol: When she needs me and I can't hear her, sometimes she pulls me.
Therapist: Maybe you can tell mom.
Carol: Doesn't tell mom. No. I don't tell her for it doesn't bother me that much, because she knows it'll hurt me.
Therapist: (to help Carol be assertive). Did you tell her "no"?
Carol: I don't tell her no, because it doesn't bother me.

Therapist: Had she been naughty recently?
Carol: She's not naughty. She peels my skin off.
Therapist: Did you cry? Did mom know?

Carol: No, No? Yes, she does.

Therapist: Was mom there?
Carol: (didn't answer). After, she's bitten by mom.
Therapist: Did you bite her?
Carol: It's not good. (She did not think biting was right).
Therapist: So, you like your sister but you don't want her biting you.
Carol: nodded.

To discover Carol's positive experiences with Dolly, we talked.

Therapist: Were there any happy times with Dolly? **(exceptions question, S-FT)**
Carol: Hid behind Dolly. Dolly started laughing because I's behind her.

Therapist: Any other happy things?
Carol: When me and Dolly played house, she hid in the closet. Dolly pretended to be a ghost.

Carol and I also talked about her other positive experiences.

Therapist: Were there times you were happy with mom?
Carol: Well, she cooked my favorite food.
Therapist: One more thing you feel good with mom.
Carol: She lets me sleep with her.

Therapist: Do you like your mom's boyfriend?
Carol: (nodded). One reason is because I'm his little pet. I played tricks on him.

Therapist: How about grandma? Grandma takes care of you.
Carol: Very good. She takes care of us.

I compared Carol's relationships with other people in order to understand Carol's relationship with her mother. We talked:

Therapist: Who do you like best, mom, grandma or mom's boyfriend?
Carol: If I said, it will hurt someone's feeling. I like all of them. Can't decide that. It'll hurt someone if I say that wasn't them.
Therapist: If it doesn't hurt, can you tell?

Carol: I think nanny.
Therapist: Oh you like nanny. Nanny is mom's grandma in Ontario.
Carol: Yes.
Therapist: How about the second one?
Carol: Don't tell mom?
Therapist: Okay

Carol: Grandma.
Therapist: The third is mom.
Carol: Um hmm.

Finally, Carol and I had a letter writing activity. I asked Carol what she wanted to tell her mother that day. Carol said, "I am happy that you came."

I wrote what Carol said on a paper. Carol copied it on a cute letter paper she chose for her mother. I suggested she started the letter with "DEAR MOM". Instead, Carol wrote, "HELLO, I AM HAPPY THAT YOU CAME."

From our conversation, I noticed that Carol and her mother's relationship needed to improve. Carol enjoyed the time in the therapy room very much. However, Carol had to leave on time because her mother was waiting.

Carol: You mean it's time to leave?
Therapist: Yes.
Carol: But I didn't have much time to play?
Therapist: How about next time?
Carol: Okay.

Carol gave Ellen the letter. I told Ellen that Carol wrote it by herself. Ellen read it but they were in a hurry to leave.

Session 6

<u>Carol, Dolly, grandparents</u>

- To discuss with Carol about ways to cope with jealousy from sibling rivalry.
- To prepare closure of therapy with Carol.

In session 6, the grandparents, Carol, and Dolly attended therapy. I informed the whole family that it was our last session. When I reviewed what we had discussed with the family, I gave the girls some candies so they would not feel bored while not listening.

I told the family that I observed there were some improvements in Carol's relationship with her sister. Christie felt the same.

Because we had only started therapy with Carol since session 4, I used the last session for treatment as well as its closure. We started with talking about Carol's feelings.

Therapist: So what's your feeling? Do you feel happy?
Carol: (nodded).
Therapist: Are you confident? (I pointed at the picture.) It means you feel you're doing a lot of good things.
Carol: (nodded).
Therapist: Okay. How about you tell me what it means. If a person feels sad, what does it mean?
Carol: Means you have to make the person feel better.
Therapist: (to affirm Carol) Yes, so you have to make the person feel better.

Therapist: Good. (We revised the scale. I went to the flip chart.) Remember this scale? How about I drew -
Carol: 1 to 10.
Therapist: Excellent, you are so smart. (I drew a scale on a big cardboard paper. Carol walked past the little table and stood very close to me.)
Therapist: Can you see it? The middle one is
Carol: 5
Therapist: So, how happy are you, from 1 to 10. 10 is the highest, 6 is just O.K, 8 is very good. 9 is very very good. So how happy you are?
Carol: Very happy.

Therapist: From the scale, you want to give yourself an 8 or 9 or 10?
Carol: 8 (very loudly and enthusiastically.)

To explore the rivalry situation at home, we played the "bubble game" again. We sat side by side on the floor, with the small table in front of us. Carol blew a bubble when she wanted to talk. Carol disclosed that Dolly hit her everywhere. It hurt her. Yet, she tried not to let Dolly hit her.

Therapist: Did you hit her back?
Carol: No.
Therapist: Good for you. Did you tell mom?
Carol: No.

Therapist: No? You know what? Tell mom she hit you so mom can help her to behave. Mom biting her is not very good, right?
Carol: Yes, then she knows how it hurts.
Therapist: She could use other ways to help her, like talking to her or give her a time-out. You can tell her how you feel.

I acknowledged Carol experiencing bad times with Dolly and we discussed how to solve the problem. Then, I used an exceptions question to explore the good times between the sisters.

Therapist: How about the good times you've been together. Any good times?
Carol: Yes, we have good times.
Therapist: What do you do together?
Carol: We play.
Therapist: What do you play?
Carol: Playing house.
Therapist: Good for you! What do you play besides playing house?
Carol: We play a lot of things together.
Therapist: Dolls or-
Carol: Yeah, dolls.

Sometimes Carol went to the flip chart to draw. Sometimes she sat on a sofa. Wherever she went, I followed so that we could talk. To explore the jealousy around sibling rivalry at a deeper level, we had the following conversation:

Therapist: Okay. Good for you! I'm wondering about one thing though. I'm talking about "jealous".
Carol: I am not jealous.
Therapist: You are not jealous of her.
Carol: Nope.
Therapist: Do you like her?
Carol: She is my sister. Of course I like her.
Therapist: Oh, how about I give you a hug. You're a good sister. Can I give you a hug?
Carol: Yeah. (I hugged her.)
Therapist: Wonderful sister. Okay. Let me ask you one question. Okay?
Carol: Okay.
Therapist: Sometimes when she was naughty, have you felt a little bit angry?
Carol: A little bit.
Therapist: A little bit, right. And I am wondering, now you don't feel jealous of her right?
Carol: Not anymore (sounded happily).

To help Carol externalize "jealousy", we discussed the following:

Therapist: Okay. So, "Jealousy" happened. How about I ask you one thing, can I? Is there an animal you don't like?
Carol: (walking around while giving the names) Spider, shark, lion.
Therapist: How about we give a name to jealousy. Say, "Lion" means "jealous". Is it Okay with you?
Carol: (nodded.)
Therapist: When I say "Lion", what does it mean?
Carol: Jealousy.
.

Carol felt it was not nice to feel jealous because it was not good to hurt others' feelings. She said when Dolly did not have something, she would give it to her. To highlight Carol's strengths, I praised her.

Finally, we discussed how to cope with the situation if the "Lion" came back, such as in situations where Dolly had something that Carol did not have. Carol said she would tell her mother or grandma what she had not so they could buy her the thing and the "Lion" would disappear.

I checked with Carol how she felt about our conversation. Carol felt that she learned something and enjoyed it very much. On a scale, from 1 to 10, I asked how much she enjoyed therapy. She said, "10." To understand if she liked talking in therapy, I asked her if she liked playing here or talking. Carol said, "I like playing here and talking too."

After therapy, I met with the family. I explained the purpose of externalizing "jealousy", which was to help Carol not to feel "jealousy" as a part of her but as something less terrible from the outside. I also informed the family that Carol named "Jealousy" the "Lion", so the family could follow up on Carol's coping at home.

Therapist: Do you want me to talk about "Lion" to grandma?
Carol: Um hmm.
Therapist: When does "Lion" happen?
Carol: Not anymore.

Therapist: When you do not have "Lion", how do you feel?
Carol: Happy. "Lion" is outside.

I briefed the family about the usual situations when Carol had the "Lion". Carol would tell her grandparents or mother when the "Lion" came back so that they could help her solve the problem. I highlighted Carol's strengths of being a very caring and generous child and she was very sensitive to other people's feelings. At her age, it was amazing. To the grandparents, I loudly intensified the message that a stable family environment for the girls was very important for their development. I praised the grandparents for being very supportive to Ellen's family, and having their home as a place of nurture for the children. Two sets of articles about parenting skills and family boundary issues were given to the grandparents and the mother.

To bring closure to the therapy, I celebrated with the family with the project souvenirs and gave Carol a Certificate for her distinguished participation in the project. When we were outside the playroom, in order that Carol would not have any unfinished business with the playroom, I asked Carol, "Do you want to say good-bye to the playroom?"

Carol: Goodbye, playroom.
Therapist: (to the playroom) Bye.

VI. Evaluations

Table 8.1: Children's scales: RSE, DSRS, & IES scores of Family R

	Rosenberg Self-esteem Scale (RSE)			Depression Self-rating Scale (DSRS)			Impact of Event Scale (IES)		
	Pre-test	Post-test	Median	Pre-test	Post-test	Cutting score	Pre-test	Post-test	Median
	T1	T2	25	T3	T4	31	T5	T6	37.5
Carol	22	16		30	26		52	54	

Table 8.2: Parent's scales: BDI & ISE scores of Family R

	Beck Depression Inventory (BDI)		Index of Self-esteem (ISE)		Cutting Score (ISE)
	T1(Pre-test)	T2 (Post-test)	T3 (Pre-test)	T4 (Post-test)	30
Ellen	14		24		

Carol had improved her self-esteem scores from T1 to T2. According to Carol's grandparents in session 3, Carol still demonstrated sibling rivalry behavior and her mother was mad at Carol when Carol misbehaved. In session 4, I started to work directly with Carol. During therapy, Carol learned to express her feelings and felt better. I highlighted her strengths and listened to her stories that sometimes she was the victim, bullied by her little sister. We also discussed some coping methods. These discussions possibly had enhanced her self-esteem. T2, T4, T6 were scored before therapy in session 6. I surmise that Carol may have improved her scores if she had scored the tests after having received therapy in the session.

Another more important factor enhancing Carol's improvement was that Carol had been living more often with her grandparents. Carol received consistent nurture, care

and parenting there. This implies that a stable family supportive environment is very important for the development of children's self-esteem.

According to Carol's IES scores, she had no change in her intrusion scores. She scored "23" to the intrusion items in T5 and T6. But, her avoidance scores increased from "29" in T5 to "31" in T6. Carol mentioned that she saw ghosts and monsters from television programs. She had lots of nightmares at her home but less at her grandparents' home. In session 6, in a family discussion, the grandparents told Carol that the ghosts from television were unreal. I encouraged the grandparents not to ignore the child's ideas about ghosts or monsters, but to talk about them and clarify the misunderstanding.

When examining the items of the IES, I found Carol improved in some areas. For example, on item number "4" ("I had trouble falling asleep or staying asleep, because of pictures or thoughts about it that came into my mind."), Carol scored "4" (often) in T1 but "3" (sometimes) in T2.

According to Carol's DSRS scores, Carol's depression had improved. Her scores fell from 30 in T3 to 26 in T4. Both T3 and T4 scores were below the median, which suggested that Carol had no clinical symptom of depression. As well, T4 reflected that Carol felt happier than before.

Ellen only filled out the pre-tests of BDI and ISE. Her BDI score indicated that she had mild depression (range of 10-15). Her ISE score showed that she did not have a clinical problem of self-esteem.

Clients' evaluation

After therapy, Carol and I filled out the Client Satisfaction Questionnaire (CSQ) together. Carol said that what she liked best about the therapy was "to stay, playing, talking." When I asked her how happy she felt from a scale from 0 to 10, she said, "10." What she liked least about the therapy was "a whiz sound in the room". She said she would definitely recommend this program to her friend. According to Carol's grandmother's CSQ, Carol had made some improvements in her relationship with her sister. She felt that Carol liked everything in the therapy. She thought what Carol liked best about the therapy was the playroom and meeting a new friend.

VII. Personal Thoughts

Working with Carol, I found that some of the NT and S-FT techniques could be used with children at the age of five. I also noticed that Carol tended to move around when she talked. Sometimes, she talked while she was walking, and I had to follow her when I wanted to communicate with her. Sometimes, she would play with anything she found while talking to me. Other times, she was drawing pictures when she talked. She needed to change activities after a short while because of her attention span. To help Carol express her feelings, I might need to give her a few feeling words and explained to her what they mean. Then, Carol would pick the word that reflected her feelings or thoughts. I understand that children at her age only learn a few vocabularies to express their feelings. Giving Carol choices of words facilitated our verbal communication.

As well, patting Carol when she was revealing some difficult experiences, giving her a hug, and highlighting her strengths often brought me closer to her. I noticed that

children at this age also expect confidentiality. I often got Carol's consent if I needed to disclose part of our conversations for family discussions. Sometimes, she might hesitate. After I explained why it was good for her if her family would know the things we talked, she would let me. I saw that after I gained her consent, she was very relaxed during my conversations with her mother or grandparents. Above all, I noticed that she could share her deep feelings with me.

The use of worksheets with Carol was limited because Carol could not write by herself. To solve this problem, I helped Carol to write down her response. (When discussing "family roles" in Families R and S, the same method was used to help the five-year-old children fill out their worksheets. During the discussion, I read the child's response to facilitate the parent and child communicating with each other).

I enjoyed working with Carol very much. I was very impressed that she was highly sensitive about other people's feelings. I observed that she was very aware of her grandmother's expectation. In front of her grandmother, she would try to be especially nice to Dolly. Carol was also very disciplined. She only ate two candies at the end of each therapy session. If I gave her more, she would not want it. I had a wonderful time talking with Carol.

Because Ellen could not attend therapy, I sent the family a narrative letter, a Certificate of achievement for overcoming the "Lion" and a project souvenir for Ellen's participation.

Family U

I. Reason for Referral

Alex, a 40 year old Caucasian man and his daughter, Fern, aged 13, were self-referred to the Family Centre for parenting issues in March, 2002. Alex was a former client of this agency. He attended therapy to deal with his sexual abuse and family issues eight years ago.

II. Family Background

Fern's mother, Shirley, was divorced and had Tina. Alex met Shirley at a bar and soon they lived together when Tina was about two years old.

According to Alex, they went together not because of love but because of the feelings of insecurity arising from their child sexual abuse. They always had fights, and Alex even physically abused Shirley. They tried counseling to deal with their sexual abuse issues, but Shirley did not complete all the therapy sessions. When Fern was born five years after their living together, Alex and Shirley married and tried marital counseling to save their relationship. However, it did not work out. They finally separated when Fern was five years old.

After her parents' separation, Fern lived with her mother, who later lived with her boyfriend, Ricky. Her mother and Ricky spoiled her by giving her money to buy whatever she wanted. There were no rules in the family. Her mother and Ricky beat her when she misbehaved.

Her mother smoked heavily, abused drugs and became so drunk that frequently she was not able to parent Fern appropriately. Ricky was also a heavy smoker and abused

drugs. He often physically abused Fern's mother. Fern said Ricky was good to her, though he beat her as well.

After his separation with Shirley, Alex visited Fern and her sister bi-weekly. Alex once lived with a girlfriend, but they soon broke up. When Fern was about seven years old, Alex met his present girlfriend and maintained an on and off relationship since then. Alex said his girlfriend and her two children visited his home in the weekends.

Alex hated Fern's mother, because shortly after they separated, Fern's mother told Fern about his sexual abuse and that he would sexually abuse his children. She also said many bad things to Alex over the years such that Alex felt he had lost his self-esteem.

In November, 2001, Fern's mother asked Alex to take care of Fern because his home had rules to keep Fern on the right track. After leaving her mother's house, Fern learned that her mother had cancer, but her mother and Ricky refused to tell her the details.

Fern's sexual abuse

When Fern was about seven years old, she was inappropriately touched by the daughter of her father's girlfriend. The abuse occurred when Fern, her sister, and the girl were sleeping together. The girl was ten years old at that time. Fern told her sister and her mother about the sexual abuse. When Alex heard it, he broke up with his girlfriend. Not long after, they reconciled with each other.

Alex's sexual abuse

Alex's hockey coach sexually abused Alex when he was between the ages of eleven and fifteen. Alex said his hockey coach forced him to participate in all kinds of sexual acts.

Figure 8.2: Family U - Fern's Genogram

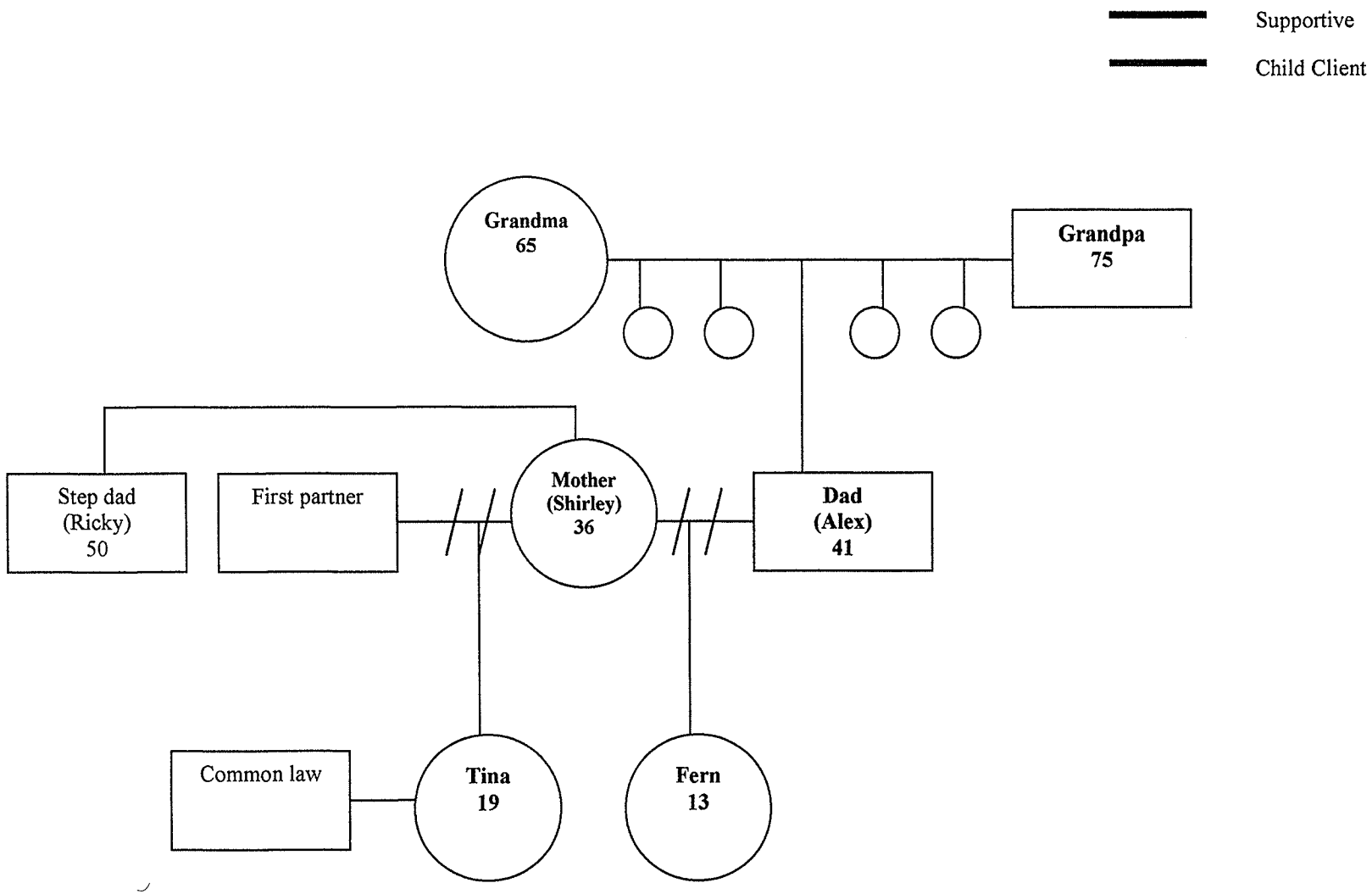

III. Presenting Issues

Alex had difficulties in communicating with his daughter who screamed at him instead of talking to him. They experienced three fights in the past week. Alex wanted to have better communication with his daughter and be able to make her listen to him. He was also upset that his daughter often visited her mother. He wanted her to choose either him or her mother. Fern wanted to improve her relationships with her father, her mother and friends.

IV. Goals of Therapy

Overall goals

- To enhance parent-child communication.
- To discuss parenting skills.
- To discuss with Fern about her peer issues.

Specific goals

Father & Fern

- To improve the parent-child relationship by enhancing their communication.
- To enhance parenting skills through discussing family roles, rules, boundaries, and hierarchies.
- To help the father understand how Fern felt towards her mother.
- To discuss CSA impacts on both father and daughter.
- To discuss the issue of family violence.
- To help Fern cope with her mother's illness.
- To discuss sex education with Fern.

Fern

- To help Fern deal with her peer issues.
- To improve her relationships with her father and mother.
- To discuss dating issues.

V. Treatment Process

Between late March and mid-May, 2002, Fern and Alex attended seven therapy sessions. Each session included individual therapy and family therapy. A home visit was paid to the family when Fern was ill. Treatment issues included: parenting, peer issues, dating and sex education, family violence, child sexual abuse, self-esteem, and coping with mother's illness. In treatment, structural family therapy (SFT) was primarily used to discuss parenting issues, whereas solution-focused and narrative therapies were mainly applied to work with other aforementioned issues.

Treatment process covered the following:

Session 1

- To understand their immediate concerns.
- To explore the different parenting styles of Fern's father and mother.
- To understand Fern's sexual abuse.
- To set therapy goals.

In session 1, Fern felt sad, angry and shy. She felt sad and angry because of her fights with her father. She felt shy because of the camera. Alex felt angry because of some issues related to his job, and enraged because of the fights with Fern.

Alex blamed Fern's mother, believing she had negatively influenced Fern's attitude in relating to him. Since Fern had visited her mother frequently during the last two months, she had started to scream and yell at him, and to express negative feelings towards his girlfriend. I discussed with the family about the different parenting styles of Fern's father and mother.

In individual therapy, Alex perceived Fern's sexual abuse was only a one-time incident of inappropriate touching which occurred many years ago. He thought it should

not be an issue. After therapy, he realized he should not overlook Fern's sexual abuse because she might respond to it differently and feel disturbed.

Then, Alex and I discussed the fights at home.

Therapist: When she screamed, what did you do?
Alex: I said, "Go to you room." She said "No." I stood up and became aggressive.
Therapist: Did you hit her?
Alex: Yes, I had. This week, she's rude, calling her mom. I grabbed her phone. She said, "I'm leaving. You are just like that, like Ricky (mom's boyfriend), hitting me."
Therapist: What did you do?
Alex: I pushed her.
Therapist: Does it remind of her mom?
Alex: Of the abuse, yes. I never do that to my girlfriend. I should have done it, should walk away.
Therapist: It's good you think of another way now.

I normalized Fern's adolescent behavior for siding with her mother and for not liking her father's girlfriend. I agreed with Alex's idea that he should give himself a time-out when Fern would not listen to his time-out. On a scale of 0 to 100%, Alex said he loved Fern 100% and her sister Tina 100%. He revealed that Tina was living with a boyfriend and he did not think it was the best thing, but he always called her.

During individual therapy, Fern and I discussed the CSA effects and her coping.

Therapist: How does it affect you now? **(effects question, NT)**
Fern: When dad's girlfriend and girls visited, I felt embarrassed. They came to the house everyday, but not to stay over. I was scared to go near the girl.
Therapist: Since she continues to visit, I am wondering how would you help yourself feel more comfortable and not feeling embarrassed? **(coping question, S-FT)**
Fern: I don't know. Not going near her, not talk to her.

Fern: When they stay over, it felt weird, uncomfortable.
Therapist: Have you been successful to overcome that feeling or make yourself to feel comfortable if she's around? **(exceptions question, S-FT)**
Fern: Yes. When she sits close to me, I said, "get away from me, don't touch me."
Therapist: If she tries to touch you again, how would you protect yourself? **(predicting setback question, NT)**
Fern: Punch her face and went to tell my dad.

While we were discussing discussed her peer issues, Fern disclosed that her mother had cancer since last year. She felt she could talk to no one in the house because her father did not have a good relationship with her mother. Therefore, she told her friends. Her friends kept on phoning her and leaving messages, "Your mom is going to die. Your mom is going to die." Fern was very distressed by these messages. Fern had a dream that her mother passed away. She felt very scared that her mother might really die. We discussed how to handle her fear. Fern found a solution to the fear of an uncertain future. She said, " If mom dies, go to dad. If it doesn't work, go to aunt."

Fern was also distressed that some good friends wanted her to take side with them against her other good friends. Her father wanted her to break up with these friends, but she refused. Fern's dilemma of choosing friends was acknowledged.

Finally, Fern and I discussed the most recent fight where her father hit her.

Therapist: Did your father hit you?
Fern: No. He only pushed me.
Therapist: How did it feel?
Fern: I felt terrible.
Therapist: Did you tell him?
Fern: No. He pushed me. My mom hit my head.
Therapist: How?
Fern: Smacked my head with hand.

It seemed that Fern was tolerant towards her father's pushing. I suspected that the family violence at her mother's house had affected her to become less sensitive to people's hitting.

In family therapy, the family and I discussed their most recent fight.

Therapist: I am wondering the pushing part.
Alex: I'd prefer to walk away. I should have said, " if you run away, you'll never come back," and I should let you go. (He turned to Fern.)
Therapist: (I clarified that daddy loved Fern and wanted her to continue to live with his family. I suggested that daddy could give himself a time-out.)

Therapist: Did you feel sorry?
Alex: nodded.

Therapist: (I explained to Fern that a friend and a father were different in that a father parented, loved and guided his child. She should not yell at her father as if she was treating her friend.)
Therapist: Daddy has done something wrong and has a kind of apologized to you.
Fern: If dad apologizes to me, I'll apologize to him.

Fern was willing to forgive her father. She gave him a hug. Then, they wrote each other a letter to share their feelings.

At the end of the therapy, I facilitated the communication process to help Alex understand why Fern disliked his girlfriend. Fern, with tears in her eyes, told her father that she 100% wished that her mother and her father would be together again. To help Fern be realistic, I asked if she knew the percentage likelihood that her father and mother would not be together. Fern refused to admit there was no possibility and said, "I don't know." I explained to Alex that many children had such a wish. Alex nodded and agreed.

To conclude the session, I praised Fern and Alex for their strengths. Fern was strong and was able to survive in a difficult family. She was confident she would keep all her appointments. She was helpful to her friends, father and mother. Fern was very glad. I praised Alex for being a responsible father. He visited his children regularly, paid children support, and made an effort to bring her children to therapy to enhance their healing.

Session 2

Father

- To explore how Alex's family-of-origin may have affected his parenting and look at the positive changes in the present

Fern

- To draw an eco-map to understand family support and priorities.

Father & Fern

- To draw narrative/solution-oriented genograms and discuss family support, strengths and resources.
- To discuss CSA myths and their child sexual abuse.

In session 2, the family discussed their genograms together. Alex started first. He revealed that his father was a welder and had to do a lot of work up North, resulting that he seldom stayed at home. This created an opportunity for the perpetrator to spend time with Alex. It seemed that Alex wanted to talk about his sexual abuse. I asked Fern if it was fine for us to talk about it. Fern said yes. Alex commented he and Fern had talked about his sexual abuse at home and he did not think it was a problem to Fern.

Therapist: How old were you when you talked about it?
Alex: I addressed it when I was 30.
Fern: (surprised) You never talked about it?
Alex: No.
Fern: Did you talk about it to grandma, grandpa?
Alex: No, because I was too scared.

Fern did not understand why her father did not report his sexual abuse. We discussed how the cultural and gender factors may have affected men to feel more difficult than women in revealing such experiences. Then, we continued the conversation.

Therapist: How did he come into your life?
Alex: In school. I felt it's love.
Therapist: Did school talk about inappropriate touching at that time?
Alex: No.
Therapist: You mentioned it was rumored he sexually abused other children.
Alex: My sis talked about it, my dad confronted me when I was 14. Dad said he was homosexual. I lied this guy wasn't.
Alex: He slept at my house.
Fern: He slept at your house?
Therapist: How did your mom relate to him?
Alex: My mom thought he looked after me.

Therapist: How did you feel when nobody know at that time? Did your sis know?
Alex: Yes, they knew. I didn't tell them. They just knew.
Therapist: How did they know?
Alex: Because he molested other kids. No adults confronted him. No one stopped his coaching. They only stopped him when I was 15 or 16. It's a secret in the community.
Therapist: I am wondering no one knew, you had no one to talk to, how did you feel? Being the person keeping this secret, how did you feel?
Alex: Oh, very insecure, very insecure, very sad.

Fern shared that her friend's friend was raped to show she understood it was a terrible experience. To help Fern understand the CSA issue better, we discussed the myths about child sexual abuse, and the under reporting from both girls and boys.

I explored how Alex became addicted to drugs and alcohol. Alex got into drugs when he was sixteen after the perpetrator had thrown a glass at him and blinded his right eye. To understand Fern's thinking, I turned to her.

Therapist: If it happened to you?
Fern: I'll kill myself.
Therapist: Kill yourself?
Fern: I'll tell.
Therapist: If it happened to you, was it your fault then?
Fern: No.
Therapist: How so?
Fern: I don't know.
Alex: Did you cause so?
Fern: It's the pedophile. It's the guy's fault, the girl wasn't.

I explored if he had any regrets in his family-of-origin.

Therapist: How did he react when he (his father) heard?
Alex: Probably when I was twelve, he knew. What could the parents do? They stopped me to go, but I continued to go.
Therapist: How would you like them to do it differently?
Alex: They should have stopped me. I thought it's love at the beginning, but no way to a 12 or 13 years old.

Alex admitted that he was angry with his mother who failed to protect him. So, he drank. But, when he got older, he understood that his mother had her own issues and he

became less angry towards his mother. His mother was stressed out and depressed by taking care of five children while his father was not always at home.

I explored if the source of his violence was from his family-of-origin. Alex said there were no fights and no divorce in his family. He had heard there was some violence by his father but only later in life. He did not see the violence directly. He thought he got his violence from the pedophile who would hit him, smack him even in front of his mother.

After the CSA discussion, we examined the strengths of the family-of-origin. Alex felt that after his sexual abuse, he became closer to his sisters and parents.

According to Alex, his father's side was very strict in parenting, but his mother's side was very caring. There were always rules in the house. He felt that girls were different in this generation because Fern talked back to him.

When discussing Fern's genogram, I explored her positive as well as negative experiences when living with her mother.

One of the positive experiences was:

Therapist: I'm wondering were there times that you were very close to your mom?
Fern: Yes, I had good times in Grade 5. We fed the horses.
Therapist: Even little thing can make you happy. So, when you have unhappy thinking, think of happy things.
Fern: Yeah.

One of the negative experiences was:

Therapist: So, when there was unhappy stuff, usually what were they doing?
Fern: They punched. My mom smacked me all the time. Ricky never hit me. (But in session 1, she admitted he hit her.)
Therapist: How did you feel?
Fern: Angry. Killing her. Push her. I hit my mom several times.

Fern felt guilty about hitting her mother, but knew that she had to protect herself. To help her forgive her mother, we discussed that her mother loved her very much but her violence might occur under the influence of Marijuana and alcoholic abuse.

Then, I challenged Fern's view about drug taking.

Therapist: Have you thought of using drugs?
Fern: No. She (mom) just put down people.
Therapist: People learn from observing, even you hate it, you may learn it.
Fern: It's not cool to do it. It's just like a "retard". It's just very stupid to do it. Right, dad?
Alex: Yes.

Session 3

Father & Fern

- To discuss family rules, roles, and boundaries.
- To discuss parenting skills.

In session 3, when we discussed family rules and it was Fern's turn to read from her worksheets, Fern commented, " I am bad at reading." I asked if she felt sad. Fern said, "Yes, I feel stupid." Alex tried to pat her to comfort her. Fern looked scared and shrank back from her father's hand, as if she was afraid of being hit. Alex was shocked at her response and looked at me. Alex and I were further convinced that discussing family violence at Fern's mother's house was important to enhance her psychological and emotional well being.

Session 4

Father & Fern

- To discuss the impact of family violence on Fern.
- To discuss ways to alleviate the consequences of family violence.

In session 4, the family and I looked at the statistics of family violence to help Fern understand that she was not the only one who witnessed it or experienced it. Then, we discussed the myths of family violence to enhance the family's understanding of the issue. During our discussion, Alex admitted that he physically abused Fern's mother when he was drunk, but he changed because he went to counseling and groups to talk about his past. When we discussed if abused women should take children away from their father, we had a little argument.

Fern: Yeah, because the dad will abuse the children.
Alex: That your mom said about me.
Fern: No, she didn't.
Alex: She said I am sexually abused and I'll sexually abuse you guys.

Alex wanted to know if the statistics of child sexual abuse in families where the parents had CSA experience were high, and if it was true that men who were sexually abused would sexually abuse their children.

Therapist: Statistically, the number is high in families where parents were sexually abused. It depends on many reasons and situations.
Alex: So, the number is high.
Therapist: Very high.
Alex: Very surprised.
Therapist: (I described how different theories had explained different factors affecting the occurrence of sexual abuse in a family. The most common factors might include: previous sexual abuse was not dealt with, alcoholism and drugs, stress, mental problems, transmission of values, parent or step-parent did not have a close relationship with the children, parent brought in different partners who might abuse the children).

Therapist: But it does not mean every parent with the issue will sexually abuse his or her child.

Then, we discussed the cycle of family violence and why it was difficult for women to leave. Alex disclosed that his eldest daughter, Tina, had experienced emotional abuse from her partner. Alex believed that Tina was tolerant of the abuse because she had seen a lot of family violence between her mother and her mother's partner.

I asked Fern how she would protect herself should family violence occur in her future family. Fern felt that if she were in an abusive relationship, she would leave the man so that her life could have a total change and she could become happy again. As well, she would look for a job and be careful in getting to know another man.

We discussed the impacts of family violence on children. Fern thought that children who witnessed family violence would feel sad, mad and scared. They would become aggressive at school, fight with other boys, and become abusive when they grew up. Alex felt that the hurt would affect him in not being able to trust people. Fern felt she could trust her friends for they were kids. However, she only trusted two of her friends.

In individual therapy, I explored how Fern was feeling when her mother and her mother's boyfriend fought. Fern felt that it was "scary". She felt scared and helpless so she played with her computer and turned the loud music on. To live happier at her mother's house, Fern thought of the good times she had with her mother and her mother's boyfriend; such as they went horse riding, camping and skating together. In the therapy, Fern learned how to externalize family violence. She named it "Scary".

To help Fern understand what kind of life she would prefer, we discussed her life at her mother's house and at her father's house. Fern felt that at her father's house, there were no hitting, no drugs, and no smokes whereas at her mother's house, there were these things. She liked to live at her father's house but her father sometimes drank and his

girlfriend visited in the weekends. Fern was still not sure if it was better to live with her father because they fought, but she agreed that life was steady at her father's house. To close the discussion, I praised her for knowing how to protect herself and being helpful to her mother.

In family therapy, Fern explained to her father how she felt about externalizing family violence.

Therapist: All right, so you have given a name to family violence, what is that again?
Fern: "Scary".
Therapist: So, when you talk about "Scary" instead of family violence, how do you feel about that ? The name "Scary". Do you feel-
Fern: I feel I am "unscarier". I think that is "unscarier".
Alex: What is called unscarier?
Fern: What?
Alex: Unserious. You feel unserious?
Fern: Unscarier!
Alex: Unserious.
Fern: You know how you really get scary and you don't get scary no more no more.
Alex: OK, secure.

I am not sure if Alex understood Fern's meaning of "Scary", but I explained to him what Fern really meant. Fern developed her own explanation about why using "Scary" to replace "family violence". She felt "unscarier" (not scary) when using "Scary" to describe her "scary experience".

After, we discussed Alex's expectation of Fern's future boyfriend to provide Fern some clear guidelines that she should look for a boyfriend who would not abuse her. Alex told Fern that he hoped that her future boyfriend would treat her nice and respect her; he would not swear at her, hit her, or cheat on her. Fern thought that if her boyfriend were mean to her, she would run away to her mother. She was being playful to make her father feel jealous.

Finally, in the letter-writing activity, Fern and Alex wrote a little card and a letter to encourage each other. Alex gave Fern a card inscribed "Be positive to take risks".

Fern read her letter to Alex. It said, "You are the best dad I could ever have. This Saturday is going to be a bomb." Alex read his letter to Fern. It said, "Feel safe at our home. I also hope we can have fun this weekend at your b-day."

Session 5

Father

- To explore how Alex's child sexual abuse had affected his self-esteem, parenting and intimacy, and help him develop new perspectives towards these issues.

Father & Fern

- To improve Fern's self-acceptance and self-esteem.

In session 5, during individual therapy, Alex and I discussed if his sexual abuse had affected various aspects of his life, including his self-esteem, parenting and intimacy.

Therapist: Today I'll be going to talk about self-esteem with her. Before that, I am wondering if you mind if we can talk a little bit about "Lonely", seeing if it might affect your parenting and other areas of life. (Alex externalized his sexual abuse as "Lonely" in the home visit).
Therapist: I'll talk a little bit about the impacts only. I'm not going into what had happened.
Alex: Okay.

Therapist: I'm wondering how does "Lonely" affect your well being right now? **(effects question, NT)**
Alex: When I was a child, how did it affect me? Do you mean that? My "Lonely" time, how did it affect me.
Therapist: Yeah, yeah. (He understood my question though he thought it was the past.)
Therapist: (To help him focus on the present) How does it affect you? Is it difficult to trust or you feel withdrawn?
Alex : Well, it's difficult to trust, may be withdrawn.

Alex: I don't trust a lot of people who get close to me. I've a lot of friends, but I don't like them to get too close.

Therapist: I mean does it matter if it's a guy or a woman....
Alex: Yeah, woman is easier than man. Women I can get closer to feelings more. Men, I don't. Just a couple of men. Men are like that. I know I'm even less resistant. With women I'm easier to talk to.
Therapist: So may be the "Lonely" thing, it affects how you feel about people.
Alex: Or relate to them.
Therapist: "Lonely" is the child sexual abuse experience and the feelings that it carries along. So, it's still here. But is it less strong now or is it the same when compared a few years ago?
Alex: I'll say it's the same. But, it did affect me then, it affects me now. I'm not frustrated with it. I know it affects me then, it affects me now. I know the reason I am. Now, I am happy and comfortable with it, not a 100% but (silent).
Therapist: More comfortable with it.
Alex: Yeah, I guess I am changing.
Therapist: You said you're comfortable with it?
Alex: Um hmm. I don't know how. Everybody notice about it. My daughter, girlfriend, a few close friends notice it.

Alex had asked me previously if it were true that men who were sexually abused would sexually abuse their children. He brought up the same issue again.

Alex: Fern's mom said, "men with child sexual abuse would abuse their daughters."
Therapist: Does it bother you?
Alex: I see it bothers me.
Therapist: I am wondering how it bothers you, if from a scale of 0 to 100%. **(scaling question, S-FT)**
Alex: Right up at 90 %.
Therapist: How does it bother you? **(effects question, NT)**
Alex: She said it in a revengeful way. She told my daughter, "He will do it." She could have a better way to do it, say, "Dad is sexually abused, but possibly he'll do it to you, so be careful."
Therapist: It seemed you were angry when talking about it.
Alex: Yeah.
Therapist: (to explore how much it affected him) How long ago when she said it?
Alex: Eight years.

Therapist: So, if it happened again, how would you cope with it now? **(coping question, S-FT)**
Alex : Now? I find it just a little weird to think right now. I'll just dismiss it. She just tried to get back at me. But then, I cried to my parents, I probably drank, smoke, I did exercise.
Therapist: Did you feel being wronged?
Alex: Yeah, yeah.

Therapist: It hurts your self-esteem, your pride.

Alex: My pride.
Therapist: And you love Fern, you wouldn't do that?
Alex: I wouldn't do it to either of them (2 daughters).
Therapist: (challenging him) But did you get scared though it might happen?
Alex: Not at all. I'd never thought of my daughters that way. No. No. They laid on me or what so ever, there's no fear about it.
Therapist: No, no. I'm saying would you feel scared you would, you might do that.
Alex: No.
Therapist: I'm saying I know some people who don't get drunk, but when they're unhappy, they're afraid they'll go to drink.
Alex: Yeah, yeah, I don't feel that way.
Therapist: Okay, good.

Our conversation helped Alex to clarify his thoughts and to understand how he would relate to the girls. Like his preferred story, he knew he would not abuse the girls. I noticed that many times, Alex wanted to talk about the past instead of the present.

We then moved on to discuss his blind eye caused by his child sexual abuse, since his blindness may have affected his self-esteem.

Therapist: How about now, how do you feel differently about your eye?
Alex: I've got used to it. As a teenager, I was disturbed by it.
Therapist: Were their times your feelings about your eyes came back?
Alex: No. I talk mostly to girlfriend. But when people talk about my eye, I laugh about it. I can laugh about it. In the past, I'd explain when I was 16, at a party, a man throw a glass at me and he is the pedophile.
Therapist: You don't need to tell about it. I'm saying if you are doing something and you can forget it, then do it, move on.
Alex: Okay.

Therapist: Do you feel it differently now?
Alex: I don't know. Probably I will self-pity a little bit, then I'll say you are lucky, you're still alive, and I'll move on. I think it is different when you see it as a child and an adult. As an adult, I see a lot of bad things. I guess, initially, I'll be depressed and struggle to move on because I don't want to give up.

Therapist: I know it's hard when you had the eye but you suddenly lost it.
Alex: um hmm.

Alex coped with his visual disability by focusing on what he still had. He had more life experiences than when he was a teenager and was able to look at his abuse from a different perspective. He chose his preferred story not to give up, but to move on.

We discussed if "Lonely" had affected his parenting.

Therapist: Does it affect your parenting though? Do you believe you're in control of your life right now? After so many years?
Alex: I don't know. I always feel I'm in control.
Therapist: How about parenting? Do you feel confident in parenting her? (Therapist laughed).
Alex: (laughed) More than previously.
Therapist: Good.
Alex: But you know you can do so much as a parent.

Then, we moved to another sensitive topic, the impact of child sexual abuse on intimacy. I suggested that if Alex did not feel comfortable with the discussion, he could pass.

Therapist: Quite often, people with the "Lonely" thing have flashbacks, which are the pictures of what happened in their abuse when having sex. I mean do you have this kind of thing now or in the past?
Alex : No, no, no. Not during sex anyway.

However, Alex revealed that he had flashbacks when he and his girlfriend were talking about orgasm a couple of weeks ago. He remembered the first time of having orgasm with the pedophile in a motel room, and he could remember the motel room exactly as it was. He told his girlfriend. She was very angry but he was not. He even said, "Relax, relax. That's a long time ago." Alex thought it was the first time he had flashbacks and he could do nothing about it. He felt his girlfriend was more disgusted about it but he was not.

Therapist: But when the thinking came back, did it stop you, make you feel disgusting or bad, withdrawn or something like that?
Alex: I don't know. I felt calm because I don't feel angry. I am not humiliated. It's not my fault. I feel more comfortable talking about it.

Alex: (disclosed her girlfriend was getting angry because her daughter was sexually abused by her brother.) So, I said you have to deal with that stuff because you're angry but I'm not.
Therapist: It's OK if you feel angry, but the point is how these flashbacks which you don't want them to come back to disturb your life can be dealt with.
Alex: Um hmm.
Alex: (disclosed that he had flashbacks long time ago when he thought about the past). There are others, not now.

I checked with Alex's feelings to see if he felt fine to continue the discussion. In the excerpt, we talked:

Therapist: Because you felt hurt. Did it hurt you when we're talking about it?
Alex: No. Other than the pain. I think I can feel pain. That's all I can feel.... Only when you think. I don't always think.
Therapist: Are you OK to continue then?
Alex: Yeah.

I explored how he coped when he remembered his sexual abuse.

Therapist: Oh, let me ask you if it comes back, sometimes when we read a magazine or watch a TV show.
Alex: Oh , yeah. They come back is OK. Things do come back.
Therapist: But, how would you cope with that? **(coping question, S-FT)**
Alex: I don't know. I guess TV show that happens. I just cry.
Therapist: Even now?
Alex: Yeah, oh even now. But I know why I am so sensitive to it because it happened to me.
Therapist: Yeah.
Alex: And I'm just crying. Tears will come down. Felt surprised, then explained to myself that "I know why you're crying, because it happened to you, and you want somebody be there for you or whatever."
Therapist: That's very good. You explained to yourself you know what happened. And you face it. That's very good.
Alex: um hmm.

Therapist: That's your own way. The most important thing is your own way you feel comfortable with it. It's important, just like what you said, you are trying to maintain a healthy life, be more in control, keep on running. You have your job, friends, family. So, when you are more in control, everything is settled down, flashbacks may come back but it is not that often. When you see stimulation, it'll come back but you're in control, and like what you said, you know what happened.

Alex: Um hmm. Yeah, exactly.

In our discussion, Alex believed that the impacts of his sexual abuse would not be totally gone. Nevertheless, he knew how to help himself feel he was in control should flashbacks come back. As well, he knew that flashbacks would decrease if he continued to maintain a healthy lifestyle, which was his preferred goal.

Session 6

Father

- To discuss Alex's personal issues.
- To highlight Alex's strengths in parenting.

Father & Fern

- To discuss possible impacts of cancer and the patient's needs, and discuss ways to enhance the family's coping with the mother's illness.
- To make new goals to move on in life should her mother pass away one day.

Session 7

Fern

- To discuss dating issues.

Father & Fern

- To discuss sex education.
- To celebrate the completion of family sessions.

When Alex returned from his business trip from Toronto, Fern had become acquainted with a boy. Her boyfriend was three years younger than her and was studying in Grade 6 in the same school. I wondered if Fern's choice of a boyfriend was affected by her self-esteem.

Fern liked her boyfriend because he made her feel happy, she could talk to him and he kept her secrets. However, her classmates thought he was her "brother". Her boyfriend's mother thought she was harassing her son and complained to the school. As a result, the school principal, vice principal and resource teacher met with Fern and discussed sex education with her. After, Fern continued to keep up the relationship.

Fern knew that this boyfriend was not real. She said when she reached the age of sixteen, she would like to have a real boyfriend. She perceived that her present boyfriend might become her real boyfriend. She disclosed that she kissed him but they would not touch each other inappropriately. Finally, as Fern wanted to know, we discussed why her friends found it hard accepting her boyfriend.

In family therapy, with Fern's permission, we discussed Fern's dating. Alex did not think it was appropriate for them to kiss each other. However, he did not think it would matter if they went out as long as Fern would be honest with him about her dating. He also did not think the relationship would become a long-term relationship.

After, we talked about sex education and boundary issues. At the end of our discussion, Fern revealed that she wanted her life to be different from her sister, Tina, who was living with an abusive man. I affirmed her thought. Then, I explored Fern's comfort level of having this kind of discussion with her father. Fern felt that it was fine and she had talked with her father about these things before, but had talked to her mother more. I encouraged Fern to talk to her mother about these kinds of topics more often.

The session ended with a celebration for the family had completed their therapy. The family was awarded with a narrative certificate that highlighted their learning about

how to alleviate the impacts of "Scary" (or "family violence"). Project souvenirs were given to show appreciation of the family's participation in this project.

VI. Evaluations

Table 8.3: Children's scales: RSE, DSRS, & IES scores of Family U

	Rosenberg Self-esteem Scale (RSE)			Depression Self-rating Scale (DSRS)			Impact of Event Scale (IES)		
	Pre-test	Post-test	Median	Pre-test	Post-test	Cutting score	Pre-test	Post-test	Median
	T1	T2	25	T3	T4	31	T5	T6	37.5
Fern	28	26		33	31		43	47	
Alex							34		

Table 8.4: Parent's scales: BDI & ISE scores of Family U

	Beck Depression Inventory (BDI)		Index of Self-esteem (ISE)		Cutting Score (ISE)
	T1 (Post-test)	T2 (Post-test)	T3 (Pre-test)	T4 (Post-test)	30
Alex	4	5	25	38	

According to table 8.3, Fern had slightly improved in her RSE and DSRS post-test scores. However, her IES scores indicated that she had slightly increased her intrusion scores from 19 in T5 to 21in T6 and avoidance scores from 24 in T5 to 26 in T6. Her RSE and IES scores were still above the medians. Her scores of both scales suggested that Fern had a clinical problem with her self-esteem and had experienced traumatic stress. Possibly, Fern's IES scores increased because of her worry about her mother's illness, which may have gotten more serious. There may be other reasons that I was not informed about. However, I think it was a good start in treatment that Fern

improved in her RSE and DSRS scores. With continuous support and therapy, I believe Fern will continue to improve in the scores of all scales.

According to table 8.4, Alex's BDI and ISE scores had increased in T2 and T4 respectively. His T2 still fell within the normal range (range of 0–9), while his T4 indicated that he had a clinical problem of self-esteem. However, T2 and T4 did not reflect the therapeutic progress observed and the positive changes or improvements Alex mentioned during therapy. I wondered if he had some current issues that had adversely affected his self-esteem and depression levels.

I invited Alex to do the IES pre-test to get an idea where he was at with his intrusive and avoidance thoughts. This information helped me understand if there was a need to engage Alex to discuss his CSA issues. If he was severely affected by his sexual abuse, his CSA impacts may have diminished his parenting ability. His IES score was 34, which was close to the median 37.5. His IES score indicated that he was close to having a clinical problem of experiencing tremendous stress.

Clients' Evaluation

Alex felt that the therapy he received had helped him a great deal to cope with his problems. He felt that he had become firm in the family rules with his daughter. What he liked best about the therapy was that I supported what he was doing. He felt that the last session was a little bit longer, because we had to do the post-tests and evaluations. It took Fern a long time to fill out the worksheets because of her reading difficulty. Generally, Fern felt that she learned something in the therapy and she liked everything.

With respect to giving little gifts or souvenirs to children in the future projects, Alex gave a rating of 50%. He felt that it was fine to give little gifts to children only if

they were good. He also felt the cards of encouragement from this project were good enough for parents. Fern thought that little gifts for children were very important because they might be in "pain".

Fern felt that she participated in the project because "she had to." Nevertheless, she rated the project at 100% on a 0 to 100% scale of service evaluation. She felt that she learned more about her daddy, and she realized that some of the time her daddy was supportive of her. As well, she felt it was good some of the time, such as "when we had fun in the therapy." Alex rated the project at 90%. He wrote, "I thank the counselor for her support and encouragement, and the phone call at home to see if we were O.K. I believe my daughter will take what she has learned and used it. Thanks forever!!"

VII. Personal Thoughts

Alex and Fern were very motivated to attend therapy. They were very communicative and we often had good discussions.

During therapy, I noticed that Alex and Fern were very close to each other, and Fern wanted her father to include her mother in his life. Alex had heard how Fern felt towards her mother. He had become more acceptant of his daughter's visiting her mother.

In working with Fern, I felt she had never been rude or disrespectful to me. In fact, she was a very friendly adolescent, and I enjoyed our arguments in the sessions. She kept her promise and completed the full course of therapy. She had a very difficult childhood living with her mother's family, where she witnessed and experienced family violence. Yet, she was brave and forgiving. She looked at the positive aspects of her mother's family and chose to start a stable family life by living with her father.

CSA issues were not the treatment focus at this phase of practicum but parenting issues were. However, Alex brought up his sexual abuse issues when we discussed the genograms. Fern was also interested in the discussion of her father's issues. I felt it was important to know if Alex had any unresolved CSA issues and discuss new perspectives to enhance healing. His ability to cope with his sexual abuse might affect his parenting. Articles about sexual abuse on males were given to him for his reference.

I felt that Alex had tried very hard to be a good parent. He had shown concern to Fern in many different ways and tried to bring her to the therapy. He followed upon my suggestion and tutored Fern for half an hour everyday after his work. When the therapy was completed, he told me that he was still continuing his tutoring with Fern.

In one of the last sessions, Fern told me that her sister, Tina, wanted to talk to me. Her father was totally shocked and said he needed to talk to Tina. I was glad that Tina was interested to talk to me even though she had not actually met me. But, Alex would like the therapy to focus on Fern's issues. Later, I learned that Fern's peers also heard about me. It felt good.

In the write-up of this case, I felt it was very special that Fern wanted to use her real first name in the practicum report. She felt that she did not need an unreal name to cover her identity and she liked her real name better. To support Fern, Alex felt the same. However, in order to maintain confidentiality, Fern and Alex finally chose their other favorite names to represent themselves in their story.

Family V

I. Reason for Referral

Melanie, a 38-year-old Caucasian woman, was self-referred to the Family Centre for parenting issues in February, 2002.

II. Family Background

Melanie was the eldest of two siblings in her family. She witnessed family violence at home when her father physically assaulted her mother. Her parents separated when she was seven years old. Both Melanie and her brother were raised by their mother, but her mother was very partial to her brother. Her mother gave her a lot of house chores, and sometimes emotionally and physically abused her. Melanie thought that her mother resented her for her mother was forced into the marriage due to her pregnancy. In her childhood, her mother always wanted her to be perfect in what she did. In contrast, her father only wanted her to try her best. Melanie had a closer relationship with her father than with her mother.

Melanie, her ex-husband and their children moved to Winnipeg from Ontario eight years ago. Four and a half years later, her ex-husband abandoned the family and moved to British Columbia with a girlfriend whom he had met on the Internet. After their separation, Melanie was introduced by her friend to a man from Nigeria, with whom she became pregnant. However, this boyfriend left her during her pregnancy.

Melanie was a single mother of five children, with Jason, aged 17; Kerri, aged 9; Billy aged 8, Barry, aged 6; and Violet, aged 1. Jason's father was Melanie's high school sweetheart. When Jason was about one year old, Melanie married her brother's best

friend and later gave birth to Kerri, Billy, and Barry. Melanie had Violet by her Nigerian boyfriend.

According to Melanie, the whole family felt extremely angry and disappointed when her ex-husband left the family. Melanie felt betrayed in the relationship. She was also angry with her ex-husband for leaving her in a single-parent situation, parenting four children alone. She experienced tremendous stress in her parenting. When they first separated, Melanie coped with her pain by drinking at the bar almost every day.

Melanie believed that Jason missed school as a result of his parents' separation. He was later expelled from school for his frequent absence. At that same time, Melanie attended a seven-month training program learning to work with the elderly. She felt she had abused the use of Jason by giving him a heavy load of house chores. Melanie thought that Kerri was also affected by her parents' separation as she began to misbehave after her father had left the family. Her ex-husband only kept loose contacts with the family and often failed to keep his promises to the children, resulting in the children's anger towards their father being directed at their mother.

Melanie alleged that a friend reported to C/FS when hearing her speaking loudly to her children. As a result, C/FS became involved in supervising the family's child-care activities for about two years.

III. Presenting Issues

Melanie felt that Kerri was out of her control and that Kerri believed her mother had not done enough for her. Melanie wanted therapy to be focused on Kerri in order to help her improve her behavior. Melanie also thought that the whole family should attend

therapy because it was "everyone in the house causing Kerri to act like this." Melanie hoped that after counseling, Kerri could become a happier child and the whole family would become happier. In addition, Melanie was worried about her own future and how she might find a partner when she had five children.

IV. Goals of Therapy

Overall Goals

- To empower the mother's parenting.
- To enhance the children's coping with their parents' separation.
- To discuss the mother's relationship issues.

Specific Goals

Children

- To help the children cope with their parents' separation by talking about their feelings, learning about the myths of divorce, and developing new perspectives towards the issue.
- To help Kerri improve her behavior.

Mother

- To discuss parenting issues, such as parenting skills and family boundaries.
- To discuss ways to develop healthy, intimate relationships.

Figure 8.3: Family V - Kerri's Genogram

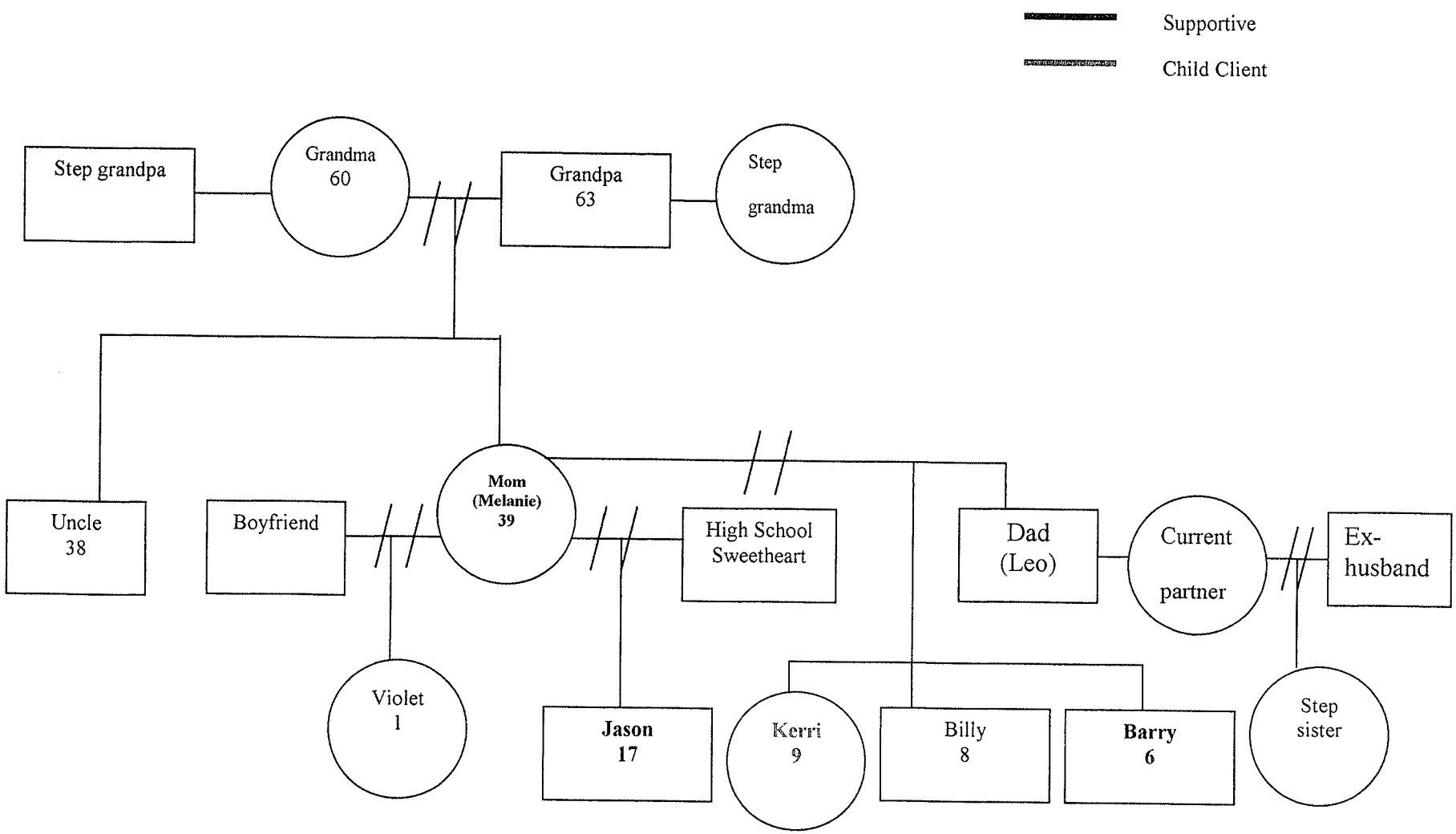

V. Treatment Process

Melanie and her family completed the brief therapy of eight family sessions from late February to early May, 2002. The treatment issues included: separation and divorce, parenting, Kerri's behavioral problems, jealousy among the siblings, dating, self-esteem, and self-care. In each session, the mother would initially attend individual therapy. Then, I worked with Kerri and other children's issues.

To discuss issues of separation and divorce, family-of-origin, dating, individual and family strengths, mainly narrative therapy (NT) and solution-focused therapy (S-FT) were used. To enhance family boundaries, roles, responsibilities and parenting skills, structural family therapy (SFT) was employed as the primary intervention technique.

Other activities in the therapy included writing letters, making anklets and bracelets, drawing pictures, and taking family and individual pictures.

Treatment process covered the following:

Session 1

Mother & children

- To join with the family.
- To set therapy goals with the family.

Mother

- To explore the parents' separation, its effects on the family, and the family's coping.
- To explore Melanie's coping with the separation with Violet's father.

Session 2

Mother

- To discuss Melanie's family-of-origin with a narrative/ solution -oriented genogram.

Children

- To set specific goals with Kerri.
- To develop rapport with the children.

Session 3

Mother

- To explore the impact of Melanie's family-of-origin on her coping and her parenting practices.
- To discuss support from Melanie's family-of-origin.

Children

- To help Kerri, Billy and Barry express their feelings towards their parents' separation.

Home visit

- To assess the impact of the family environment on the family's functioning.
- To observe the family's transactional patterns and the mother's parenting practices.

Session 4

Mother

- To understand Kerri's stealing incident (also Jason and Billy's previous stealing incidents).
- To discuss the mother's dating issues and issues about developing healthy, intimate relationships.

Children

- To enhance the children's confidence by discussing their strengths.

Session 5

Mother

- To discuss the incident of Kerri's recent temper tantrum in the mall
- To discuss with Kerri about the incident that she and Barry played out late.
- To discuss Melanie's self-care.

Children

- To listen to Kerri's disclosure about her boyfriend.
- To discuss Kerri's misbehavior.
- To explore the issue of jealousy in the family.

Mother & children

- To discuss how the children feel about the jealousy issue.

Session 6

Mother

- To discuss parenting skills and boundary issues (enmeshed versus clear boundaries).

Children

- To help Kerri improve her self-confidence by highlighting her strengths.

Session 7

Children

- To explore how Jason was coping with his parents' separation and discuss new perspectives to enhance coping.
- To work with Kerri about her tidiness issue at home.

Session 8

Mother and Kerri

- To discuss the transactional patterns in the family.
- To celebrate the family having completed all therapy sessions.

Home visit

To say good-bye and bring project souvenirs to the children.

In the following section, I describe excerpts of the discussions on: (A) The impact of family-of-origin on Melanie's parenting, (B) Effects of the parent's separation on the children, (C) Kerri's ideas about having a boyfriend, (D) Parenting issues, and (E) Ending therapy by starting with new goals.

A. <u>The impact of family-of-origin on Melanie's parenting</u>

The following excerpt was the discussion about how her mother's partiality to her brother had affected her life and parenting.

Therapist: How did you cope with the unfairness at that time? **(coping question, S-FT)**
Melanie: I carried the anger, but now I think it's her problem, not mine. A long time ago, I found it's my fault, until I found out why. (Her mother was pregnant to marry.) I don't feel it anymore.

Therapist: How did your upbringing affect you and your brother? **(effects question, NT)**
Melanie: He was the second born, he traveled, had a job, and bought a house.
Therapist: He has a good life.
Melanie: But not anymore. (She explained why.) But, he always does the right things.
Therapist: How about you?
Melanie: I'm always in trouble.
Therapist: I am wondering what do you mean "trouble"?
Melanie: I just didn't do everything right as mom was concerned, not in school. I didn't finish grade 12.

Therapist: How do the two kinds of upbringing affect two different kinds of life on you and your brother? **(effects question, NT)**
Melanie: My brother isn't as angry as I have been for a long time. I guess he can look at the thing more positively. I have to fight for everything in my life.
Therapist: It sounds like you're a fighter.
Melanie: I have no choice.

Therapist: How has your mother's parenting affected your parenting? **(effects question, NT)**
Melanie: I do not hit kids. They do get spank if misbehave but not beaten as I was. My mom hit me with a belt or anything on any part of my body.
Therapist: (to highlight her strengths) I wonder if you are trying to make things better, to have a different parenting style?
Melanie: Yes.

In the discourse, Melanie became more aware of how her relationship with her mother had affected her life. She also made her conscious efforts to make her parenting different so that her children could have a better life.

B. Effects of the parents' separation on the children

When providing therapy for Melanie's children, I met Billy and Barry together, and Kerri and Jason separately because of their age difference. They would benefit more from therapeutic discussions that fit their developmental age. Moreover, Kerri and her younger brothers could not attend therapy together because they talked incessantly.

To discuss her parents' separation, I first engaged Kerri in therapy by checking her feelings that day. She felt "bored" after she had walked with her family in the mall the whole day, "enraged" that her mother did not buy her a toy, but "happy" because her mother bought her an ice-cream and a donut. Then, we gradually moved into the topic about her parents' separation.

The conversation started with talking about her feelings.

Kerri: Sometimes I cry because I miss him (her dad) so much.
Therapist: Still miss him?
Kerri: (nodded.)
Therapist: Were you close to him?
Kerri: Yes (and nodded). He calls mom every weekend and he talks to us.

To check with Kerri's understanding of her parents' separation, we talked:

Therapist: Do you know what happened or why it happened?
Kerri: Because he had a fight with my mom. He left for BC.
Therapist: But do you know why he left?
Kerri: Because he didn't want to have fights anymore.
Therapist: Would you like him back?
Kerri: He is coming back this week (Easter).

To understand how Kerri interpreted her parents' separation at a deeper level and to explore if Kerri put the fault on herself, we discussed:

Therapist: Why did mom and dad separate?
Kerri: They probably didn't get along.
Therapist: If animals don't get along, what do they do?
Kerri: Fight.
Therapist: Just like animals, if they fought continuously, what would be the result?
Kerri: If they continue to fight, they will scratch to hurt.
Therapist: So, if daddy and mom continue to fight, they may scratch to hurt. So, is it (the separation) mom's fault?
Kerri: No.
Therapist: Dad's?
Kerri: I don't know. It's just nobody's fault. It's just they don't get along.
Therapist: (to summarize) So, daddy left, not your mom's fault, not your fault.
Kerri: (shook her head).

To explore how she felt about her parents' separation, we talked:

Therapist: After daddy had left, how did it affect you? You feel sad right?**(effects question, NT)**
Kerri: (nodded).
Therapist: Did you feel angry?
Kerri: Yes, angry. He didn't even say good-bye.
Therapist: (I explored how her father left. I encouraged Kerri to tell her father how she felt about not saying good-bye. Kerri said, after her parents' separation, her father always said goodbye when they talked. But, it couldn't change the situation.)

Then, I explored the impact of her parents' separation on the family.

Therapist: I am wondering how does the separation affect the whole family? **(effects question, NT)**
Kerri: We are miserable.
Therapist: Did you talk to your brother you're miserable?
Kerri: No.

Therapist: Did they talk to you?
Kerri: No.
Therapist: Jason? (Kerri was closest to Jason.)
Kerri: No.

Therapist: You just bear it all alone? Keep the feelings inside? **(coping question, S-FT)**
Kerri: (nodded.)
Therapist: Did you feel lonely at that time?

Kerri: (nodded.)
Therapist: Do you feel lonely sometimes now?
Kerri: (nodded.)
Therapist: How so?
Kerri: My daddy was not there to keep me safe, keep me do my homework.
Therapist: If your dad saw you tomorrow, what would you tell him? **(landscape of action question, NT)**
Kerri: (silent.)
Therapist: Just tell him how you feel.

I thought it would be healthy for Kerri to have an opportunity to talk about her wishes if she would want her parents to reconcile.

Therapist: Do you want your mom and dad to be together again?
Kerri: (nodded.)

Kerri revealed that she wanted to have a dad, but this dad did not need to be her real dad. She hoped that her new dad could cuddle her and be on her side if the boys bullied her.

We discussed the possibility of her parents' reconciliation.

Therapist: And, do you think it's possible that your mom and dad will be together then?
Kerri: (nodded, but followed by shaking her head). Because they were apart for so long and I kept on asking my dad if he could.
Therapist: If he could what? Move back to the family? What did he say?
Kerri: (Her head leaned on the table. We sat on the floor.) He phoned me and said, "I'm not sure about it."

We discussed a preferred story.

Therapist: It's hard for he has a girlfriend and they are living together. So, what is the best way now, say daddy cannot come to live with you guys? And what would the best relationship between your father and your mother?
Kerri: If he could live in the city so we could visit him on the weekends. (She liked her dad to talk more often with her mother.)

She felt that both her father and mother loved her 100%, but her father's girlfriend loved her only 59%. We looked at the possibility of reconciliation on a scale from 0 to 100%.

Kerri: 20.
Therapist: 20. OK. What is the percentage you want them to be together?
Kerri: (looking at the table and spoke in a low tone) 100.

To explore her feelings at a deeper level, we talked:

Therapist: Do you sometimes feel painful without daddy? How painful it is, from a 0 to 10 scale? **(scaling question, S-FT)**
Kerri: 10 (loudly.)
Therapist: Do you know what is a lost feeling? It means somebody is there, but he is suddenly gone. Have you felt like that before?
Kerri: (nodded.)
Therapist: From a scale of 0 to 10, how are you feeling now? **(scaling question, S-FT)**
Kerri: 5
Therapist: 5, OK. But when daddy just left you?
Kerri: 10 (very loudly.)
Therapist: You have shown some improvement now. Very good for you.

I summarized our discussion that it was good that Kerri had asked her father to come back even though it was difficult since he had a girlfriend. I emphasized that it was good for her to tell her father what she thought, what she needed and what she wanted.

To help Kerri be aware that she was not the only one with divorced parents, I asked her if she knew any friends whose parents were separated.

Kerri: About 24.
Therapist: 24? It is almost the whole class.
Kerri: There were 3 classes. 24 in one class, 23 in one class, 21 in one class.

I did not challenge Kerri's number, but I explored how her parents' separation had affected her schoolwork.

Therapist: OK. If parents are separated, can they still do well at school?
Kerri: (silent.)
Therapist: Yes or no?
Kerri: (nodded.)
Therapist: If from 0 to 10, how well can they do, you think?
Kerri: 10.
Therapist: If parents don't divorce, how well can they do, from 0 to 10?
Kerri: 10.

Therapist: So no differences, right?
Kerri: Actually for the first one, I have 4.
Therapist: So are you doing not so well in school?
Kerri: Not so well.
Therapist: Do you want to improve?
Kerri: (nodded.)
Therapist: Good for you. You know what? If you tried to work hard, you can still do very well at school, even if daddy and mommy are separated.

I believed that it would take time for Kerri to heal and the parents' continuous support to the child's coping was very important. Nevertheless, in the therapy, Kerri could talk about her feelings and thoughts in a safe environment, and develop new perspectives on her problems.

After working with Kerri, I talked with Billy and Barry. Billy was angry about the separation. He was also angry that his father did not call often. He said he had only talked to his father on the phone once. As well, Billy gave examples how his father broke his promises when he promised to take him to places. Barry was less angry than Billy. This might be due to the fact that he was very young when the separation happened, so he did not feel as strongly about the parental loss as his siblings did. However, both Billy and Barry wanted their parents to be together. On a reconciliation scale of 0 to 10, they said, "10."

At the end of the session, the whole family gathered together again. I asked the children if I could talk a little bit about what we had discussed. I briefly informed the mother that each child kept their feelings and thoughts about their parents' separation inside their hearts. It was not only Kerri who had been affected but also the boys, especially Billy. I encouraged the family to talk to each other about their feelings and thoughts so that the family could know how to be supportive of each other.

In session 7, Jason did not need to work and was able to attend therapy. He did not see why he needed therapy. He thought he did not have a problem but only Kerri did. I told him that he was important because he was part of the family and I did not want him to feel left out. Jason was fourteen years old when his father left the family.

I explored how separation affected him and how he perceived why it happened. Jason had more empathy for his father than his siblings on why he left. He felt that his mother was also responsible for the separation because "she takes care of the kids but she just wouldn't do much but expected my dad to do a lot." Both his parents had hot tempers, but he thought his mother's hot temper had pushed his father away. After his parents' separation, he felt his father treated him a lot better now than the way he did when he was with his mother. He felt it was not right for his father to leave with his girlfriend, but it happened. He felt he could not help it.

To understand his thoughts on his parents' reconciliation, we talked:

Therapist: Did you talk, try to help, at that age, to stop it to bring your father back?
Jason: Not really. Yeah, he just left.

Therapist: Have you thought of, at that time, wanting your father to come back?
Jason: Sometime.
Therapist: Um hmm. Have you told him?
Jason: I did tell him.

I explored the changes that occurred in his life after his father left. He did not go to school for a year, then he started again but dropped out the following year. During that time, his mother went back to school, and she often stayed downtown or went to a bar. Jason baby-sat the children, cooked for them and walked them to school. He had parties at his house in the evenings. Sometimes, he slept when he felt depressed.

To understand how he felt in those two years, we talked:

Therapist: So, how did you feel you had to do a lot of housework? Usually at this age, people go to school and have friends but you stayed at home and do things like that? You are like a mom. So, how did you feel about that at that time?
Jason: (picked a feeling card) Angry.
Therapist: Angry because?
Jason: Because mom always went out.
Therapist: OK, if mom didn't go out?
Jason: Then she would be there for the kids at night.

Therapist: I'm wondering, say, in the past, what was the feeling that you felt yourself were affected by it, tired or ? **(effects question, NT)**
Jason: I was tired.
Therapist: Is "tired" still in your life now? (**externalizing question, NT**)
Jason: No, but I was.
Therapist: You're a responsible person. You tried to do a good job to help mom.

To measure his "tired" level, I asked how he would rate himself on a scale of 0 to 100%. Jason said he was 70% tired in those two years, and now was about 15%. We also looked at how much "hope" he felt he had after his parents' separation and at the present stage. He said he did not have much hope after his father left, but now his level of hope was about average on a 0 to 100% scale.

To help Jason become more understanding towards his mother's coping, we talked:

Therapist: In the evening, she drank? In the day time, what did she do?
Jason: She sat in the mall a lot.
Therapist: She was sad, right?
Jason: Um hmm.
Therapist: She was very sad, trying to find a way out of her sadness.

Jason disclosed that his mother was very sad and always cried in her room. He did not talk to her but he thought, "I guess she has to deal with it." Jason did not talk to his friends about his feelings either. Instead, he coped with his unhappy feelings with parties and having fun.

We discussed his "preferred family".

Therapist: How would you like your own family to be different from this one? Or what kind of families do you like for your future?
Jason: (thought for a while) Have a good job.

Jason revealed that the family's financial situation had affected their adjustments and relationships when they first moved to Winnipeg, and had indirectly led to the break up of the family. Therefore he wanted to have a good job. Then, I explored how his father's abandonment had affected his view towards future relationships. He said he would not choose the same path as his father should relationship problems occur in his own family.

I explored if there were any unresolved issues. Previously, Melanie told me that Jason cried after having a telephone conversation with his father.

Therapist: I hope you don't mind that your mom mentioned she saw you cried in the kitchen. Why did you cry? What made you feel so sad? It seems you are very sad in the heart.
Jason: (silent).
Therapist: (after some moments) What was bothering you?
Jason: Just stuff that we're talking about.
Therapist: What did you say?
Jason: We were talking moving out there. I was thinking about it.

Therapist: How did you feel about it?
Jason: More freedom.
Therapist: Um hmm.

Jason: I'll finish school before I move anywhere.
Therapist: Was it mom a factor?
Jason: That was one of them. I'm thinking about school.
Therapist: Your friends?
Jason: Some of them.
Therapist: Was it because of your brothers and Kerri that you don't go?
Jason: Um humm.
Therapist: So, you're trying to be a responsible brother.
Jason: I guess so.
Therapist: But you feel it's better to go to BC too. So, you are in a dilemma. I think you want to protect your mom.

Jason: I guess, a sort of.
Therapist: Is it fair to you?
Jason: I don't know.
Therapist: You know what? Keep this open. Maybe there are other ways to help them.
Jason: Um hmm.

Then, I highlighted the positive aspects in the two years of crisis in Jason's life.

Therapist:The separation happened. Do you feel you were sacrificed? **(landscape of consciousness question, NT)**
Jason: No.
Therapist: What did you get? Did you get something positive in those two years? **(effects question, NT)** Something that was happy? You've been so responsible like a mother.
Jason: Um hmm.
Therapist: Were there any good times even in those two years of tough time? **(unique outcome question, NT)**
Jason: Sometimes. Parties that I had.

We also discussed how to achieve a preferred future.

Therapist: (to help Jason to set goals) How about now? How would you like to make your life to be different?
Jason: Have a good life.
Therapist: How do you prepare yourself? **(landscape of action question, NT)**
Jason: Go to school. Stay in post-high. If I decided to go to anywhere, I would like to go to a school in Ontario. It has a good training program. I want to work at a TV station after I graduate.
Therapist: OK. Another dilemma. How about your mother? How are you going to tackle it? **(dilemma question, NT)**
Jason: I don't know. She has to live with it.
Therapist: (laughed) If your mom wants you to stay till 40. Can you do that?
Jason: No.

At the end of the therapy, I summarized our conversation.

C. <u>Kerri's ideas about having a boyfriend</u>

In session 4, Kerri asked me, "Would it be possible that I would have a boyfriend?" Kerri wanted to have a boyfriend because she would feel "comfortable". She thought that when she was sad, her boyfriend would hug her and she was a person

who liked to be hugged. She liked two boys in her school and her friends told the boys she liked them. However, the boys did not like her and she felt embarrassed. Her mother felt she was too young to have a boyfriend. But, Kerri felt "left out" because she did not have a boyfriend as her friends did. I affirmed her that she was still good without a boyfriend and it was good for her to talk about her feelings.

In session 5, Kerri disclosed that she felt "love-struck" because a boy in her class was hanging around with her. His name was Jimmy.

Therapist: (Thinking she might like his appearance.) How does he look like?
Kerri: He has brown hair. I don't know what color. He has skin like my brother, but a bit darker.
Therapist: What do you like him about?
Kerri: The way he looks, and he is nice and he likes me.
Therapist: He likes you.
Kerri: The kind of boys I would like to marry is one who actually, the boy who likes me back and he likes the things I do, and when I get older, I want him like the job I have.
Therapist: OK. What job you want to have?
Kerri: I want to be in modeling. And I want to be a teacher.
Therapist: OK.

I was surprised because she did not mention she had a boyfriend in the previous therapy session. It seemed very quick that she got a boyfriend in a week.

Therapist: When did you guys get together?
Kerri: When I told, yesterday when my friend Alice told him I love him.
Therapist: Oh!
Kerri: I like him 4 years!
Therapist: I respect.
Kerri: Because in Grade 1, I started to like him but then I stopped. In Grade 2, I liked him and then I stopped.
Therapist: Then, why did you stop?
Kerri: I don't know. Because I started to like other boys. But I always had him in my mind.

Kerri also felt "shocked" because Jimmy "actually wanted to dance with her." She thought he liked her and no boy had ever liked her before. She felt "happy." She felt "not left out" because she had a boyfriend as her friends did.

D. Parenting issues

In this section, I will describe the therapeutic conversations about Kerri's behavioral problems, jealousy among the children, and the transactional patterns in the family.

(a) Kerri's behavioral problems

During therapy, Kerri had misbehaved in various ways. In session 4, her mother told me that Kerri had stolen a chocolate bar from Safeway, because her friend said, "I bet you dare not go to Safeway to steal the chocolate bar." In individual counseling, Kerri and I discussed briefly about her stealing and she promised not to do it again.

In session 5, Melanie told me that Kerri displayed a temper tantrum in a mall because she could not afford to buy her ice cream. In family therapy, we had an enactment of what happened in the mall. Finally, Kerri listened to my suggestion and said "sorry" to her mother.

Another incident was that Kerri went out with Barry and her friend and returned home at 8:30p.m.. They were supposed to be home earlier. In individual counseling, Kerri told me they went to an empty attic of a building where "mean people" lived. They lay on the curtain and talked.

Therapist: Some adults may abuse you.
Kerri: What does it mean?

Therapist: It means doing things to hurt you.
Kerri: Oh. If they hurt me, all the things I can do is, kick them in the bump, and then trip them, and then drill them downstairs.
Therapist: You know what? I heard a 13-year-old girl was recently drawn and being raped by a guy.
Kerri: Yuck!

I informed Melanie of the incident and the possible danger. Melanie felt that the only thing that would change her situation in parenting was when her ex-husband would move back to Winnipeg and share the custody of the children. However, he needed to have money to move back from British Columbia and he needed a job in Winnipeg. Although it was not an option right now, Melanie believed this would be a solution to the parenting problem.

(b) Jealousy among the children

Melanie did not know that the younger children were jealous of Violet. To help her be aware of this issue could enhance her parent-child relationship, because she could take positive steps to clarify the misunderstanding about the favoritism perceived by the children. Moreover, the mother could parent the children better if she knew what was in the children's hearts.

In an initial therapy session, I explored if there were jealousy among the children.

Therapist: Do you feel jealous of Violet because she's the second daughter?
Kerri: I don't feel jealous but happy for her birth.

But, as we became more familiar with each other, Kerri was more open in revealing her real feelings. In session 5, Kerri and I discussed the jealousy issue in the family. Kerri admitted that she was jealous of Violet. I taught Kerri how to externalize "Jealousy". Kerri externalized "Jealousy" and named it "Pig". We discussed why she felt

her mother was "partial" to her sister, what she wanted her mother to do for her, and how she could handle "Pig". I encouraged her to tell her mother how she felt, but she was too scared to do so.

To explore if her brothers also had "Pig", we talked.

Therapist: Did your brothers feel the same way though?
Kerri: Nope.
Therapist: Barry?
Kerri: No.
Therapist: Billy?
Kerri: No and Jason wasn't there.

During the family therapy session, I discussed with both mother and daughter about how the birth of Violet had affected other children. Kerri consented to my revealing of her jealousy. Kerri also explained to her mother that "Pig" meant "Jealousy".

Melanie: Is Kerri feeling jealous of Violet?
Therapist: Well? (I looked at Kerri so Kerri would tell her mother directly.)
Kerri: Yes, because you always hang around with her instead of me. (I pat Kerri on her back to support her.) You cuddle her.

Kerri poured out her heart to her mother. When we almost finished our discussion, Billy and Barry joined us. I explained that jealousy meant, "When mommy is good to Violet, you feel upset." I asked the boys if they felt like that. Billy said, "Yes." Barry "nodded" and said, "Yes." They all admitted that they wanted their mother to cuddle them when she cuddled Violet.

The children's revelation was a surprise to Melanie. She loved her children, every one of them very much. The children also loved Violet. Therefore, Melanie was not aware that "Jealousy" could happen in the family. The children used the same method to cope with their parents' separation and "Pig". They kept their feelings inside their hearts and tried to cope with the problem by themselves.

During family therapy, the children learned to tell their mother about their concern. The mother learned what her children were going through and clarified the misunderstandings. As well, she could learn what the children wanted from her. For example, when I asked Kerri, "If a miracle happens, what would you want your mother to change?" Kerri said, "She cuddles me more." After the project was finished, I ran into Melanie, Kerri, and Violet on the street. They were very close to each other. I guess Melanie had paid more attention to include her other children when she was with Violet.

In session 7, to work with Kerri's tidiness issue, I asked Kerri to help me move the unwanted chairs to the wall. She listened to me. I praised her, "Very, very good." After, I asked her how the room had looked different. She said, "Clean." I asked if she would do the same in her room. She said, "No." I explained to her that if she found it too much to clean the whole room at one time, she could clean it little by little and the room would look better. Kerri also helped me pick up the unwanted toys on the floor. I praised her being "creative" in her way of tidying the room.

When the whole family gathered in the therapy room, I told the family that Kerri had tidied the room and had done a great job. Since the use of praise was not frequent in the family, I encouraged the mother to notice Kerri's small improvements at home and use praise or positive comments to highlight these improvements.

(c) Transactional patterns in the family

In session 6, I shared with Melanie my observation that her family was characterized by diffused boundaries, where the parent yielded to her children too easily. We discussed parenting skills to solve the particular parenting problems arising from the

boundary issues. I highlighted and affirmed what Melanie had been doing right and encouraged her to do more of it.

In session 8, I was more open to challenge the interaction patterns in the family. In this last session, only Melanie and Kerri were attending therapy. All the boys were playing soccer that evening. Melanie was in a bad mood because she just discovered that Violet's father did not pay the phone bill and her telephone had been disconnected. We spent some time discussing this issue. Then, I briefly reviewed with the family what we had discussed so far. I asked Kerri if she remembered what we did last week. Violet was sleeping in the therapy room.

Kerri: Clean the room. (She meant the therapy room.) My room is clean now.
Melanie: Yeah, she did a good job all by herself.
Therapist: Good for you. Amazing.

I asked Melanie if she found the articles about parenting useful.

Melanie: I found them interesting and I'm sorry that today is the ending. I found we have just touched the surface.
Therapist: I agree one thing that we might have only touched the cover of things in parenting since there were many parenting issues.
Melanie: Yeah.
Therapist: But, at the beginning we had done a lot of clinical things about the "separation" to help the children get out their feelings.
Melanie: We need to continue that, because it has to continue.
Therapist: Yeah, yeah.

Melanie described how Kerri still misbehaved at home. Kerri yelled at her mother to defend herself.

Melanie: OK, Kerri, do not yell at your mom but talk to your mom.
Kerri: (Silent.)
Therapist: But the other thing is, you speak very loud, and she speaks very loud. It's a kind of, you both are yelling. **(focusing, SFT)**
Therapist: I am only an outsider. I know you're very frustrated in parenting, OK.
Melanie: Um hmm.
Therapist: So, the quickest way to solve the problem may be, is to speak loud to stop what was happening.

Melanie: To raise my voice.
Therapist: And she is not right, but she, at this age, she learns from modeling, learning from you. **(universal truth, SFT)**
Melanie: Yeah, but I don't always start off loud.
Kerri: Yes you do! Whenever you say something, you yell at me.
Therapist: Interaction at home sustains the problem. **(enactment, SFT)**
Melanie: At home.
Melanie: I'm sure it's the way we interact at home. She pushes me to the bottom and I get angry and the things have said that they should not be said.

Therapist: It's very hard for parenting five children.
Melanie: Yeah.

There were three activities to bring closure to the session. The first activity was a game named "Knowing each other". The game emphasized the discussion of strengths. When the mother and the child were able to think positively of each other, they might develop positive communication patterns.

At first, Kerri was upset with her mother and refused to sit with her mother. So, I sat between them to facilitate the communication process. When they were playing the game, they became more relaxed and Kerri looked much happier.

Therapist: One thing you admire.
Kerri: You go first, mommy.
Melanie: If she is nice, I can consider it.
Melanie: (After some thoughts, she turned to Kerri.) When you're attentive, nice and considerate.
Therapist: Mom said when you're attentive, nice and considerate. Although your mom may feel it's rare, it did happen. It can happen again. **(emphasizing strengths, SFT)**
Therapist: What do you like her about?
Kerri: That's she's my mom.
Therapist: (I turned to Melanie and spoke loudly.) She loves you. **(achieving intensity, SFT)**
Therapist: I think that even though sometimes she misbehaves, we need to give her more encouragement and praise, look at some little things although it is so little, it still needs recognition. **(suggesting alternative solution, SFT)**

When we finished the game, I checked their feelings about how they much they enjoyed playing together on a scale from 0 to 100%. Kerri scored 100% while her mother scored 90%.

In the second activity, each family member shared their feelings when a sea-shell was passed to them. They could pass if they did not want to talk. The activity was to highlight their strengths, and I hope that the family would continue to practice praise and develop a positive communication pattern at home. Kerri sat with her mother on the same sofa. I sat beside Kerri to facilitate the communication process. However, in the activity, they had a fight.

Therapist: OK. Tell mom two good things about mom.
Kerri: You're good mom and you're lovable.
Therapist: (to look at positive interaction) Tell mom how you would love her?
Kerri: If she stop splashing out so much.
Melanie: (raise her voice) When does mom splash out?
Kerri: When you get mad at me.
Melanie: And why I got mad? (Melanie started to talk about Kerri's misbehavior.)
Therapist: (to challenge the transaction pattern) This comes again. You talk, she talks, and it's getting very hot here.
Melanie: Yeah, yeah.

I suggested that Kerri should apologize to her mother for being disrespectful. I told them their communication often focused on the negative things. It resulted that they fought with each other and the cycle of fights sustained the problem. As well, I suggested that Kerri needed encouragement and praise, even if her improvements were so rare and so little.

E. <u>Ending therapy by starting with new goals</u>

The third activity was a discussion about Melanie and Kerri's future goals with the use of worksheets. We discussed what they wanted to achieve in their family

relationships, family responsibilities, school and/or self-study, social life, fitness, and other goals. I hope that clients would leave therapy with new personal or family goals.

To conclude therapy, I gave feedback on each child's therapeutic progress. I told Melanie that Jason was still very angry. I also suspected that the boys had not gotten over their parents' separation. Billy seemed to have more adjustment problems than Barry did. Melanie felt that Jason was fine, and revealed that he had attended intensive therapy with a school social worker for about a year. Melanie preferred that future therapy would focus on Kerri and herself. She felt that the boys could join treatment when they had such a need.

The termination of the therapy was marked by a celebration for achieving the therapeutic goals. A narrative certificate of achievement for learning to cope with "Stressful" (Melanie externalized the "separation" with her ex-husband by naming it "Stressful".) was given to the family to highlight their learning in the therapy process. Project souvenirs were given to Melanie and Kerri to show appreciation for their participation in the project. Finally, the family enjoyed the dinner party celebrating the completion of the therapy.

On the following day, I visited the family to say good-bye to other children and bring them project souvenirs.

V. Evaluations

Table 8.5: Children's scales: RSE, DSRS, & IES scores of Family V

	Rosenberg Self-esteem Scale (RSE)			Depression Self-rating Scale (DSRS)			Impact of Event Scale (IES)		
	Pre-test	Post-test	Median	Pre-test	Post-test	Cutting score	Pre-test	Post-test	Median
	T1	T2	25	T3	T4	31	T5	T6	37.5
Kerri	**22**	**21**		**30**	**26**		**45**	**32**	
Billy	13	22		22	36		19	31	
Barry	18	27		30	39		28	37	

Table 8.6: Parent's scales: BDI & ISE scores of Family V

	Beck Depression Inventory (BDI)		Index of Self-esteem (ISE)		Cutting score (ISE)
	T1(Post-test)	T2(Pre-test)	T3(Pre-test)	T4(Post-test)	30
Melanie	36	36	95	88	
Jason	0	0	9	4	

According to table 8.5, Kerri had shown some improvements in her RSE, DSRS, and IES scores. She had only a small positive change in her RSE score (T2) because of several incidents of misbehavior and her being grounded by her mother. There was a remarkable change in her IES scores. Her intrusion scores had decreased from 20 in T5 to 7 in T6, while her avoidance scores remained the same 25 in both T5 and T6. Generally, Kerri's RSE, DSRS and IES scores indicated that she had improved respectively in her self-esteem, her depression level, and her coping with intrusive thoughts.

Billy and Barry's scores in RSE, DSRS and IES indicated that their psychological and emotional levels had become worse. At their young age, Billy and Barry wrote their post-tests by themselves at home. Without supervision or guidance in writing their tests, I am not sure if their scores would actually represent their emotional and psychological

states. However, I believe that there were some truths reflected by the scores. In my last visit to the family, Barry told me that his mother had recently become very impatient with them and she always went out. Billy revealed that his mother started to be "mean" at home by talking loudly to them. According to table 8.5, I noticed that Billy was mostly affected.

According to table 8.6, the mother had no change in her BDI scores. She scored 36 in both T1 and T2. She remained in the range of severe depression (range of 30-63). Jason scored 0 in both T1 and T2. His BDI scores fell within the normal range (range of 0 to 9). However, I am not sure if Jason's BDI scores truly represented his state of depression. It seemed that he was still struggling to cope with some issues, such as his parents' separation and his responsibilities over his siblings.

Melanie had improved in her ISE scores. Her scores fell from 95 in T3 to 88 in T4. Her scores indicated she had a severe clinical self-esteem problem (the second cutting score was 70). However, I wonder if Melanie's ISE scores truly represented the level of her self-esteem. Her response in the therapeutic conversations did not reflect she had such a low self-esteem. Jason had improved his ISE scores slightly. His ISE scores fell from 9 in T3 to 4 in T4. Both T3 and T4 scores indicated he had a good self-esteem. This was possibly due to that Jason had many friends and was popular among his peers.

Clients' Evaluation

In session 8, Melanie felt that after therapy, the most obvious change she found was that "she did not allow her daughter to walk over her." As well, she liked "being able to talk about her daughters' behavior without repercussions." I believe Melanie enjoyed therapy. In session 3, when I checked with her comfort level with therapy, she said, "Are

we here only twice? I felt we had been here for a long time." I asked if she felt comfortable with therapy. She said, "Oh yes." In session 8, Kerri revealed that her mother enjoyed talking about her own things in the therapy. Regarding what Melanie liked least about the therapy, she said, "That it isn't longer."

Kerri and Barry did not see any changes in themselves but Billy felt he was happier in the therapy room.

In session 1, I checked with the family's feelings with the use of feeling cards. Jason was "cautious" and "hopeful". Billy felt "hopeful". Barry was "shy" and "shocked". Kerri felt "confident" and "love-struck" because "she got kissed on the cheek." When the therapy sessions were completed, all the children said they liked everything in the therapy.

What the children liked best were "the gifts, eating, being happy here, time with Violet, talking about things, playing and being with Monita (the student therapist)". Billy felt that the project was excellent. On a scale of 0 to 100, all the children rated the project at 100%. They said they would definitely recommend the program to their friends. Jason commented that he was not sure why he joined the project and what had changed since he "wasn't there enough."

In this project, little gifts were used to highlight children and parents' strengths and for special occasions such as birthday celebrations. Melanie commented on the little gifts for parents, "It makes us feel good too." She felt the provision of supper was a great help to her family. She explained that when she returned home to prepare to bring the children for therapy, she felt too rushed to cook for them.

Barry and Billy felt that the gifts should also be given to their parent. Barry thought it was "because everyone seemed to be happy," while Billy thought it was "because she is an excellent mom." Kerri felt it was less necessary "because they are older than kids." The whole family strongly suggested that "little gifts" should also be given to children in the future children programs. Kerri, Billy and Barry felt that the gifts could help children feel happy and encouraged. They also felt they were given the gifts because they were nice and respectful. Finally, the children commented that they enjoyed spending time with their family very much.

The family felt that there was no change in their family situation, yet they felt happier in the therapy sessions to talk about things, learn new perspectives and have a good time. As Barry described his experience in therapy, he wrote, "It's fun." They all looked forward to continuing therapy at the agency. Although Jason did not want to attend therapy, he hoped that his family could be wait-listed as soon as possible.

VII. Personal Thoughts

It was a different experience and challenge to work with Melanie and her family where sexual abuse was not an issue. I could practice S-FT, NT and S-FT to work with different family issues, and thus enhanced my learning experience.

Melanie was highly motivated to seek therapy. She tried to involve all her children in the therapy, thinking that every family member's interaction with each other had sustained Kerri's behavioral problems. Sometimes, Melanie felt too tired to bring her five children to the agency. After encouraging her, I found that Melanie often became steadfast to attend therapy with her family.

I agreed with Melanie that therapy was too short for the family. The family had many issues that took time to resolve. Moreover, the mother often had a new agenda to bring to the therapy room, such as discussing Kerri's recent behavioral problems. I also believe that if there were more therapy sessions, there could have been more time to discuss Melanie's personal issues, such as her need for social relationships and intimacy. If she could cope better with her own issues, she might have more patience, love and energy to parent her five children.

I noticed that this project was a very supportive project to the family. For example, Melanie once requested that my faculty supervisor issue her a letter to her social assistant worker for a special allowance so that Kerri could get braces for her teeth that would help enhance her self-esteem. Such a request probably reflected that clients felt our project was a resource and helpful.

As well, Melanie and the children were very communicative. It did not seem that they had a trust issue with me. Their being very communicative and trustful facilitated the discussions in the therapeutic process.

In the picture activity, I felt it was very precious that everyone in the family was present, especially when Jason was a teenager and was often busy with his own schedule. The children were very happy in taking their individual pictures. They slept on the couch, made funny faces and all kinds of gestures. Their laughter told me that they enjoyed therapy and the time together very much.

In my last visit, Billy asked me to visit him one more time so he could make me a thank you card. I thought they were my joy.

Family S

I. Reason for Referral

Gordon, a 44 year old Aboriginal man, was self-referred to the agency in February, 2002. He requested individual therapy and family therapy to deal with his relationship problems with his partner and her children.

II. Family Background

Gordon's parents were alcoholics and were not able to provide their children with appropriate care. Gordon's two brothers were taken into care by C/FS when they were born. When he was 4 years old, he and his three sisters were taken into care by C/FS and put into different group homes. Gordon and one sister lived in the same group home, but later he ran away with his sister to live with his grandaunt's (whom he called grandma's) family. Although he experienced physical abuse by the family, he lived there until he was twenty years old. He felt deeply hurt and angry towards his parents' abandonment which caused him to have a very unhappy childhood.

When Gordon was about ten or eleven years old, all his paternal uncles and aunts suddenly passed away as a result of alcohol poisoning. When he was fifteen or sixteen, his mother also passed away due to the same reason. Gordon was sad but he was brought up not to cry nor to talk about his feelings because he was expected by his family and relatives to act like a "man" who would not show his emotions. He said he was not too troubled by his mother's death because he was not close to her. He claimed that the deaths of his relatives did not have much impact on him.

Gordon started to drink when he was sixteen. He quit drinking about ten years ago. However, he had relapses every few months. He tried not to drink because he was afraid that C/FS would put his daughter into their care.

When Gordon was about seven years old, he was sexually abused by his cousins who were eleven-year-old girls. The abuse continued for a few years. In the abuse, there were inappropriate touching and intercourse. Gordon said he enjoyed those sexual acts, but it was not until the recent years that he realized how his child sexual abuse may have affected him. After the abuse started, he became interested in older women. Later in his life, he enjoyed having sex with a lot of women.

Gordon and Candy's mother never married. When Candy was about six months old, Gordon left the family. Gordon blamed Candy's mother for always fighting with him and feeling jealous of his work and life while she was staying at home. Gordon disclosed that Candy's mother later had a nervous breakdown because of heavy drinking and drug abuse. Consequently, Candy was put into the care of C/FS. When Candy was about three and a half years old, Gordon went to court and claimed the custody of Candy.

Gordon studied two years at the University of Manitoba. Gordon worked roughly 10 years as a group facilitator, and then 5 years as a life skill instructor. Then, he worked another 4 years in a group home. At the entry of therapy, he was looking for a job.

III. Presenting Issues

Gordon and his partner split up. He moved out with his daughter, Candy, who was five years old. He requested therapy to help him cope with his separation from his ex-partner. He also agreed to bring Candy in to discuss parenting and adjustment issues arising from the changes in the family.

IV. Goals of Therapy

- To follow up Gordon's coping with the separation and an on-and-off relationship with his ex-partner.
- To discuss Gordon's past issues, such as the abandonment by his parents, his sexual abuse, and the maltreatment at his grandmother's home.
- To discuss parenting issues.
- To enhance Candy's adjustment to her father and his ex-partner's separation and living in a new home environment.
- To enhance Candy's coping with the sudden passing of her mother.

V. Treatment Process

In session 1, Gordon requested that I help him to deal with his family-of-origin issues. I agreed to discuss some of his past issues within the time-limit of the project, and suggested that he could continue treatment after the student therapist had left the agency.

In the course of therapy, Candy's mother suddenly passed away. Gordon brought Candy in the last therapy session. However, I assessed that there was a need to further follow up Candy's adjustments, so I extended the six therapy sessions to eight therapy sessions for the family.

In dealing with parenting issues, I used structural family therapy (SFT) techniques, such as enactment, achieving intensity, suggesting alternative suggestions, universal truths. We examined the family transaction patterns, rules and boundaries. In treatment of other issues such as Gordon's family-of-origin and Candy's coping with her mother's passing, I used solution-focused therapy (S-FT) and narrative therapy (NT). In S-FT, scaling questions, coping questions, miracle questions and exceptions questions were applied. In NT, externalizing the problems, effects questions, unique outcome questions, landscape of action questions, landscape of consciousness questions, dilemma questions and predicting setback questions were used.

Treatment process covered the following:

Session 1

- To discuss Gordon's coping with the separation (the break up, their on and off relationship, his ex-partner and her children's relationship with Candy before and after the break up).
- To understand Candy's adjustment to the changes brought by the break up of her father and his ex-partner.
- To set therapy goals.

Session 2

- To follow up Gordon's coping and his on-and-off relationship with his ex-partner.
- To explore Gordon's family relationships, crises (abandonment, sexual abuse, family deaths and alcoholism in the family), supports and strengths with the use of a narrative/ solution-oriented genogram.
- To compare his present family with his family-of-origin and highlight the strengths of his present family.
- To highlight his efforts and ways of maintaining "alcohol free" in the family and explore other alternatives of coping, such as developing social networks.

Session 3

- To follow up Gordon's job search and his coping with his on-and-off relationship with his ex-partner.
- To understand Candy's family background and her relationship with her natural mother.

Session 4

- To discuss parenting issues, such as parenting skills and boundary issues.

In session 4, Gordon and I discussed the impact of rigid, clear and enmeshed boundaries on parenting. Gordon was too rigid in his parenting. He needed to be more flexible in enforcing family rules especially when special life events may have occurred and affected Candy's behavior. In a discussion about boundaries, Gordon realized that Candy should not run naked in the house as she usually did. He would also dress appropriately when Candy was at home.

Session 5

- To discuss the sudden passing of Candy's mother.
- To understand Gordon and Candy's coping.

Session 6

Father

- To explore Gordon's previous relationships and their impacts on him.
- To discuss how his way of viewing women might affect Candy's views towards men and her future relationships.
- To help Gordon develop a healthier perspective towards his future relationships.

Candy

- To help Candy learn feeling words and scales to express her feelings.
- To follow up Candy's coping with the loss of her mother.

In session 6, I worked with Candy and helped her cope with the loss of her mother. I started the therapy process by exploring Candy's feelings with the use of feeling cards. She did not know how to read many of the words but asked me what they meant. Candy loved the use of scaling questions and loved to yell the number out loudly and enthusiastically. Instead of using a scale starting from 0 to 10, she preferred using a scale starting from 0 to 100 or higher **(scaling question, S-FT)**.

To relax her when discussing her mother's passing, I allowed Candy to blow bubbles before she spoke. I asked her about the good times she and her mother had together **(unique outcome question, NT)**. Candy remembered the happy times when she was three years old. She said, "In the snowflakes, she was skiing." Candy was on her mother's back. I also asked, "Okay. What other good times did you and your mom have?" **(unique outcome question, NT)**. Candy said, "Yeah, we were together, had fun." Her mother played "hide and seek" with her and read her stories when she went to bed.

I asked how she felt in those happy times **(landscape of consciousness question)**. She said she felt good when she was with her mother. Candy felt that her mother was a good cook and could cook anything. While her mother cooked, she would watch television. She told me what her mother was like and that she felt her mother was beautiful.

Candy also told me about the unhappy times with her mother. According to Candy, the only time that she did not want to be with her mother was when "she got angry." I explored, "What did she do when she got angry?" Candy said, "She, she threw you into bedroom." I asked, "Did it hurt you?" Candy said, " Nope."

As our conversation continued, Candy was gradually able to go more deeply into her feelings. I explored how she felt about her mother's passing. I asked, "Now, your mom is gone. How do you feel?" **(effects question, NT)**. She said, "Sorry."

To understand how she was coping, I asked, "Will mom feel sad because mom is not with you?" Candy said, "Nope." I guessed, "Because mom is in your heart right?" But Candy said, "Nope." I wondered, "No?" Candy replied firmly, "She is in Heaven." I asked, "Did you want your mom to come back sometimes?" She said, "Sort of." However, Candy knew that her mother was in Heaven and was unlikely to come back. To explore how she coped with it, I asked, "Did you cry?" She said, "Nope." Then I asked, "When you remember mom, what do you do to make yourself happy?" **(coping question, S-FT)**. She was silent. I patted her to comfort her. I assured her that her mother loved her. Candy said, "Yeah." She said she felt that her mother's love was "similar" to when she was still alive; her mother loved her, but now she lived in Heaven. I asked, "Is it okay that we think about mom sometimes?" Candy said enthusiastically, " Yeah."

In discussing the loss of Candy's mother, I could not use S-FT and NT techniques alone. When I asked Candy, "How would you like your life to be different?" She went to the flip chart to draw a picture. It was possible that it was too sad to talk about a future without a mother. Drawing a picture could help her express her feelings better. As well, I felt it was important for her to express herself the way she felt comfortable, especially when discussing this serious topic. So while she was drawing, I explored the meaning in her picture with S-FT, NT, and reflective skills.

In the picture, Carol was riding a plane close to Heaven where her mother and God were. At the bottom of the picture was her town. She pointed at the picture and told me that her mother was in Heaven. She explained she was riding a plane in order to be close to her mother so that she could see her mother. Candy gradually disclosed that "Mom is sad." I tried to find out why she said that. She began by saying, "I don't know." I asked her if it was because her mother missed her. She nodded and said, "Um hmm." At the end of the story, Candy told me that her mother was no longer living in her house but in Heaven. She also said her mother was perfectly fine in Heaven and she knew her mother loved her very much.

Session 7

Father

- To follow up Gordon's coping with his on and off relationship with his ex-partner.
- To discuss how "anger" might affect parenting and anger management skills.

Candy

- To follow up Candy's adjustment to the loss of her mother and to living in a new environment.

Session 8

- To follow up Candy's coping with the loss of her mother.
- To facilitate parent-child communication about Candy's misbehavior at home.
- To conduct family activities to highlight strengths and discuss family roles.
- To celebrate the completion of family therapy.

One of the parenting issues was that he often became mad when Candy misbehaved. After he lost his temper, he apologized to Candy. We discussed how his separation from his ex-partner had given rise to such anger. Gordon realized that apology was not as effective as controlling his temper and that he would give himself a time-out before he got mad at his daughter. Gordon disclosed that recently when he got mad at Candy for not behaving, Candy looked at him hurtfully but did not say anything. We discussed some parenting skills.

In family therapy, Candy told her father she never thought she was wrong when her father thought she misbehaved. Instead, she thought her father was wrong because he apologized to her every time after he got mad. She also told her father that she did not understand why her father became mad at her.

Gordon and Candy discussed a solution. Should Candy misbehave again, Gordon would give himself a time-out before he lost his temper, then he would return to Candy and explain to her what she had done wrong. He would give her a consequence by grounding her and taking away her television privileges. Candy learned that she would receive a consequence if she misbehaved. As well, she learned she should tell her father to give himself a time-out when he became angry.

Finally, we celebrated the completion of therapy. The family received a Certificate of achievement for learning to cope with the "loss" (which was Gordon and

his ex-partner's break up) and the project souvenirs. The project also celebrated Candy's upcoming sixth birthday with birthday presents.

V. Evaluations

Table 8. 7: Parent's scales: BDI & ISE scores of Family S

	Beck Depression Inventory (BDI)		Index of Self-esteem (ISE)		Cutting Score (ISE)
	T1 (Pre-test)	T2 (Post-test)	T3 (Pre-test)	T4 (Post-test)	30
Gordon	38	22	41	64	

Gordon's BDI score fell sharply from 38 in T1 to 22 in T2. The change of score indicated that Gordon was less depressed after attending therapy. Before attending therapy, his T1 score indicated he had severe depression (range of 30-63). After therapy, his T2 score indicated he had moderate-severe depression (range of 20-29). However, his ISE score increased dramatically from 41 in T3 to 64 in T4. His T4 score was close to the second ISE cutting score of 70, which indicated that client was severely stressed by his self-esteem issues. However, Gordon's ISE score was inconsistent with his therapeutic progress. As observed, he had improved his coping and had shown more confidence since attending therapy. I wondered if Gordon had some new issues that had affected his self-esteem. Perhaps, at the beginning of therapy, there was a gender issue that he felt uncomfortable revealing his true level of self-esteem to me. This may have affected his real ISE score in the pre-test, but after therapy, he possibly had accepted himself more and showed his real score in the post-test.

According to Gordon, he felt closer to Candy as a result of therapy. He felt that therapy helped him become more aware of his anger around Candy and how he must control it and not take it out on her. He discovered that therapy had helped him realize he was not the "problem" leading to his break-up, but that there were other reasons, and he became able to take less responsibility for the break up with his ex-partner. He thought that there was not enough time to deal with all of his family-of-origin issues. He commented that he was glad to have this time with me, but he felt that the sessions were too few. He found the cards of encouragement very helpful and said Candy liked the books I gave her very much. Finally, he gave me a verbal comment, "I feel you are genuine, not doing the job because it is a job." Gordon requested that both his individual therapy, and his family therapy with Candy should continue.

VII. Personal Thoughts

It was a challenge to work with Gordon who was a very experienced counselor. In the first session, he doubted my ability if I could be able to help him. However, he gradually showed more respect to me. In one session, Candy drew two pictures and wanted to give them to her father. Gordon looked at Candy and Candy gave one picture to me. In addition, it turned out that he attended every therapy session and he welcomed my suggestion to extend the sessions for his family.

Gordon loved Candy very much. He tried to maintain sober for Candy, fearing that he would lose her to C/FS if he kept on drinking. Although he was "macho", he made a necklace for Candy while waiting for her individual session to finish. He persevered despite difficulties and never gave up. While he was unemployed, he sent out

three application letters every day. As well, he tried to widen his social network by attending parties to meet people.

It was sad that Candy lost her mother at such a young age. Although Candy was only five years old and had lived apart from her mother, she had a deep love for her mother. In working with her, I was amazed at her understanding of her mother's passing and her being able to find her resolution to move on. She remembered the love of her mother. When I asked her two things that her mother loved her, she said, "Mom and I played bubbles." She also said, "Sledging."

Candy had a preferred goal. She thought that her mother wanted her to be a good girl. When I asked, "What do you like to be different in the future? To be good?" She said, "Yeah."

I think that the very special part of this family case was that Gordon had changed his attitude towards therapy. As Gordon revealed, he felt it was sad for him to attend therapy with Candy because it meant Candy had problems at a very young age. After therapy, he realized that therapy could be fun for children, and seeking therapy meant that they were well informed of the community resources.

Family T

I. Reason for Referral

Marie, a 38 year old Aboriginal woman, was self-referred to the Centre after looking in the telephone book. She requested individual therapy to deal with her jealousy problem with her boyfriend, Justin, in February, 2002. After I explained to Marie that my project had a focus on parenting issues, Marie agreed to participate in family therapy to deal with her parenting issues as well.

II. Family Background

Marie was the eldest of four siblings in her family. Marie witnessed family violence in her childhood. Her father physically abused her mother. Marie tried to hide herself when family violence happened. Marie felt that her father was hardworking and a good provider, and had an influence on her that she did not like staying idle at home. When her parents separated, she and her siblings lived with their mother and moved to Winnipeg from a French community in Manitoba.

Her mother started drinking at the age of twenty-eight. Her sister still drank. Her youngest brother who was receiving therapy had just quit drinking. Marie began drinking under peer influence when she was sixteen. Marie and her boyfriend, Justin, were both alcoholics before they met. Both felt drinking did not work for them and they quit it by themselves. Instead of drinking, they went to movies and malls. However, when feeling stressful, Marie would worry that she might go back to drinking.

Marie lived with her now ex-husband, Ben, since sixteen. They had three children: Arthur, aged 20, Christopher, aged 18, and William, aged 5. Ben often physically abused her in front of the children. She usually tried to hide herself in the closet when this happened. Ben abandoned her a few times and then would suddenly return home. Marie was also angry that Ben had several relationships with other women and had children with them. But, he often left them without taking responsibility for his children.

When Marie was thirty-two, Ben left her again for a few months. Marie met Justin and she refused to live with Ben again. However, Marie was once again pregnant by Ben. Ben worked in a circus in California and he visited the children every July.

When Marie's eldest son, Arthur, was in his early teens, he had been sentenced to a Youth Centre for five years and Marie visited him weekly. After Arthur was released, he tried very hard to lead a normal life and sustain his own family. Marie's second son, Christopher, was lying idle at her home. Marie was very concerned about it and tried to push him to do something. Marie said that both sons had been affected by the family violence. Marie's youngest son had a normal life because he did not witness any family violence and she was able to give him responsibilities. In contrast, she did not do it to her older sons for she lacked confidence in parenting while family violence continued in her relationship with her ex-husband.

When Marie was about ten years old, she was inappropriately touched by her cousin who was about eight years older than she was. Marie did not think that her sexual abuse had affected her intimate relationships.

Another crucial life event was that Marie had a panic attack at home when she was 21 years old. Since then, she was afraid to go out alone. She also felt afraid to come to the agency because no one could accompany her. Besides, her sister, her mother and her second son, Christopher, did not believe in counseling and had advised her not to attend therapy. Christopher asked, "How can you talk about things with strangers?" Marie felt discouraged to attend therapy.

III. Presenting Issues

Marie had recently discovered that Justin's ex-wife, who was living with her boyfriend, was pregnant by Justin. Marie was very upset because it happened when they were together. Justin put the blame on Marie by stating that he saw Marie talking to her ex-partner during his visit to Canada, and that he felt jealous and had sex with his ex-wife. Marie was also worried that they might break up one day because she was eight years older than he was. In addition, Marie was disappointed because her second son was idling at home.

As therapy progressed, Marie wanted to discuss ways to handle her anger and her panic attacks. She was concerned that Christopher was jealous of her younger brother, and the children did not relate well to her boyfriend.

IV. Goals of Therapy

- To enhance Marie's parenting and family/intimate relationships by improving her self-esteem.
- To enhance Marie's anger management.
- To discuss ways to help Marie cope with her panic attacks.

V. Treatment Process:

Marie attended six therapy sessions between the period of February, 2002 and April, 2002. We discussed issues which included: jealousy, self-esteem, relationship with boyfriend, family violence, parenting, anger management, and panic attacks.

In the case intervention, family structural therapy was mainly used to discuss parenting, whereas solution-focused therapy and narrative therapy were used as the primary intervention techniques in other treatment issues.

Treatment process covered the following:

Session 1

- To discuss Marie's most recent concerns, such as the "trust" issues and her insecure feelings with her boyfriend.
- To explore the trust issues in her relationship with her ex-partner.
- To highlight Marie's strengths.

In session 1, Marie and I came to the conclusion that "low self-esteem" had made her feel insecure, as well as lack confidence in her parenting and family/intimate relationships. Therefore, I highlighted her strengths, the positive changes in her life, and the love and supports from her family and boyfriend.

Marie found that she was hurt most by her relationship with her ex-husband. She was glad that her present life was much better than her life with her ex-husband or when she was living with her parents. When she lived without family violence and was respected by her boyfriend, she gradually felt that she had more self-esteem.

Session 2

- To explore Marie's family-of-origin with the use of genogram.
- To understand how the family-of-origin might have affected her choice of partner, her coping with family violence, and her parenting.

Session 3

- To discuss Marie's current concern about Justin's having a baby with his ex-wife.
- To discuss Marie's second son's recent idleness and affirm her efforts in parenting.
- To discuss "her ideal self and real self" to enhance self-acceptance.

Session 4

- To use narrative/solution-oriented perspectives to explore the strengths of Marie's family-of-origin (alcoholism and parenting).
- To discuss the drinking problem in her family-of-origin, the impact of drinking on her family, and to highlight Marie's methods to maintain sober.
- To enhance Marie's self-esteem by highlighting the positive changes in her present family, and by comparing her present family to her previous family with her ex-partner, and to her family-of-origin (re: parenting and children's lives).
- To discuss her expectations of her children to enhance goal setting in parenting.

Session 5

- To discuss ways to handle anger.
- To discuss ways to help Marie's children cope with anger arising from witnessing family violence.
- To discuss parenting issues (enmeshed, rigid and clear boundaries) and ways to help Marie's youngest son who witnessed violence in the streets to talk about his fear.

In session 5, Marie was sure that she truly loved her boyfriend and was willing to marry him. She stated, "He is nice, he is good. He still needs improvement in some areas, but no one is perfect." Marie felt hopeful for her youngest son, William, whom she thought was not "damaged" by her previous relationship. She also said she would not give up on her second son, Christopher, but would continue to guide him and urge him to go back to school. Marie still had many problems unsolved, but she found her own solutions. One of them was "doing one thing at one time."

Session 6

- To discuss how to handle the fear of panic attacks.
- To celebrate the completion of family therapy.

VI. Client's Evaluation

Table 8. 8 : Parent's scales: BDI & ISE scores of Family T

	Beck Depression Inventory (BDI)			Index of Self-esteem (ISE)			Cutting Score (ISE)
	T1 (Pre-test)	T2/5th session	T3 (Post-test)	T4 (Pre-test)	T5/5th session	T6 (Post-test)	30
Marie	22	37	23	48	59	50	

I invited Marie to take T2 and T5 in the fifth session because she had not attended therapy for three weeks. During that period of time, Marie's boyfriend, Justin, had lost his job. As a result, she and Justin could not afford the wedding that was arranged to be held in August, 2002. But, they had already talked to the priest and paid part of the Hall. As well, she lost her purse when taking a ride from her sister's friends. Her purse contained all her identity cards and her children's old pictures for which she no longer had the negatives. She suspected that her sister's friends had stolen her purse.

The scores increased sharply from 22 in T1 to 37 in T2, and from 48 in T4 to 59 in T5. This indicated that life events could affect the scores very dramatically. After the fifth session, the scores improved again by returning close to the level when Marie first started therapy. Generally, Marie's BDI score of 23 in T3 indicated that she had moderate-severe depression (range of 20-29). Her ISE score in T6 indicated that she had

a clinical problem with her self-esteem. As her T6 score was 50, which was 20 above the cutting score (30), it may reflect that she had a serious problem with her self-esteem.

After the therapy, Marie commented that she found her relationship with her youngest son had improved and she began to feel that there was hope in his future. She enjoyed the therapy and what she liked best about it was the "one on one talking." She thought that the little gifts for children were very helpful. She felt that the provision of snacks and food "if needed" was good because "some children may not have these things at home." On a scale of 0 to 100, she rated the project at 100%. Her final comment was " I feel good when I leave, it gives me energy and think things may get better."

VII. Personal Thoughts

In the initial sessions, Marie was very shy and felt uncomfortable with the camera. She gradually spoke more. Marie was very humorous and we laughed a lot together. Marie liked to use metaphors. She described Christopher as "a cat", sleeping all day. She said her boyfriend was like "a cockroach", who was a survivor and moved around for opportunities. She externalized the feeling of "insecure" by naming it "snake" because it felt like it was "crawling" in her heart. Marie loved her children very much and never gave up loving them even when they had gone awry. She was strong and survived all misfortunes, such as her previous marriage. She aspired to complete her high school and find a job. At the end of the therapy, she planned to move to a safer neighborhood where her children would be less likely to associate with bad peers.

In this case summary, the special part was that Marie chose the names for her family to be recorded in this report. She felt it was special to her to use these names. As

well, I found session 5 was very special when Marie's boyfriend joined us for a friendly chat.

Summary

To conclude this chapter, I have presented five family cases. In these family cases, my intervention focus was on parenting issues. In Family T, children did not attend therapy, but the mother and I discussed parenting skills. In Families R, S, U and V, I worked with parents and their children directly, and was able to observe the family interaction and the therapeutic impact on both parents and children.

In the treatment process, I noticed that children wanted their parents staying in the agency while they were attending therapy. For example, Carol of Family R wrote her mother a note, which said, "Hello, I am glad that you came." Children viewed their parents' participation important.

As observed, the therapeutic progress of clients showed that structural family therapy worked effectively with parenting and boundary issues, while solution-focused therapy and narrative therapy worked very well with other diverse issues experienced by my clients.

S-FT, NT, and SFT worked with a wide age range of clients and could be used with children as early as five years old. Sometimes, I felt it was hard to adhere strictly to the use of these therapies, especially when working with young children who were discussing serious issues and who expressed their feelings and thoughts by drawing pictures. I learned to be flexible in the treatment and to incorporate other appropriate treatment strategies to help them.

I also observed that all parents had their personal issues. Most parents were ready for individual therapy. Since the project was time-limited, there was not enough time to address all their personal issues.

Relevant articles were distributed to parents for their reference. These articles covered the following topics: parenting skills, parenting styles (parenting with diffused, rigid and clear boundaries) and children's behavior, family violence and its impacts on children and women, CSA issues, male victims of child sexual abuse and their sexual identity, coping with loss and grief, and panic attacks. Children stories about how to cope with parents' separation were given to parents and children to read together. Some parents read the articles and found them helpful.

Finally, all families experienced positive changes as a result of therapy. Families S, T, U, and V wanted to continue therapy at the Centre after this project was finished. Family R felt that the problem of sibling rivalry was solved and the child did not need any follow-up service.

Chapter 9

Summary of Practicum Experience

In this concluding chapter, I will provide some remarks about my experiences with the use of individual, dyadic, family, and group therapies as treatment modalities. As well, I will discuss the strengths and limitations of solution-focused therapy (S-FT), narrative therapy (NT), and structural family therapy (SFT) as intervention techniques. Finally, I will conclude my learning experiences during the practicum.

In this project, I found the application of various treatment modalities was very useful in working with sexually abused children and their families. As illustrated in my case analysis of Families A and B, there were some issues that needed to be addressed with clients in individual therapy, whereas dyadic or family therapy was used to enhance parent-child communication and family resilience. Group therapy had greatly facilitated my child clients in talking about their feelings and learning new perspectives from other group members.

Intervention should be client-centred, instead of fitting clients into a particular intervention model. There is not one particular therapy that can meet the needs of all clienteles because each client is unique and may respond differently to different therapies. Therapy will become more effective if the therapist focuses on approaches or techniques that can better help clients. About this, Cecchin (1987) has made an important point (Cecchin, 1987, cited by Sluzki, 1998, p.417):

> It is better not only to be aware of one's own paradigmatic preferences, conceptual attachments and technical prejudices, but to enact that awareness so as not to colonize our patients' realities by imposing our views on them.

To make therapy be more client-centred in this project, I chose S-FT, NT and SFT as my intervention techniques. Many research studies support the fact that these therapies could meet the needs of my project clients. As well, learning different therapies, their strengths and limitations, could enrich my knowledge base and equip me to be better able to work with diverse clients and issues.

The following section discusses my project clients' responses to the use of S-FT, NT and SFT during therapy.

S-FT, NT and SFT with the children

In solution-focused therapy (S-FT), my child clients responded very well to the scaling questions. I noticed that some children whose ages ranged from five to nine years old felt that it was fun to talk about the scales. Sometimes, they yelled out their answers enthusiastically. Girls from nine to thirteen were very familiar with drawing their own scales and were able to explain by themselves why and where they were on the scale.

Sometimes, some young children did not understand some technical terms that were so commonly used in solution-focused therapy. For example, when they did not understand the word "miracle", they would ask me to explain the word. After explaining "miracle", they were able to respond to miracle questions. As well, in asking coping questions, instead of using the word "cope", I asked, "How did you help yourself?" Children were able to tell me how they had coped with the problem.

In narrative therapy (NT), children were able to respond to many NT questions, such as the effects questions, unique outcome questions and dilemma questions. They also learned how to externalize problems. In Family U, Fern, a 13 year old girl, was self-

aware of why we externalized "family violence". She explained to her father why she used "unscarier" to replace "family violence" ("unscarier" means "not scared" by "family violence"). For younger children, I had to explain why and how to use this technique. They had no problems in understanding it. For example, Carol of family R knew that the "Lion" (means "Jealousy") was outside herself.

I used structural family therapy (SFT) to work with children in various issues. In the following, some examples will be illustrated.

Unbalancing techniques (SFT) helped improve the parent-child communication in the family cases. Most of my child clients were afraid to reveal their real feelings and thoughts to their parents. Siding with my child clients, I supported them to pour out their hearts to their parents. This enhanced their emotional well-being and their parents could understand them better.

In Family B, Hope was able to tell her mother how she felt about the grounding at home and her new stepfather living with the family. In Family A, Janice got the courage to tell her mother how she felt towards her mother's dating.

In Family V, as a result of my coalition with the children, the children revealed to their mother that they were jealous of their baby sister, Violet. The mother's reality was challenged since she thought that she loved all of her children.

In Families S and U, the father was the sole parent. Children of Families S and U shared a similar problem that their father and mother had a poor relationship. Each father did not think his child would need her mother, therefore the children were afraid to talk to their father about their mother.

In session 8 with Family S, I asked the family if there was one thing that made them feel happy during the week. The child, Candy, said that she was happy because she got to swim at the beach. Candy's father thought that she was out of her mind because they did not go to the beach. In individual therapy, Candy disclosed that her mother and she played in the water and they were happy, but it was in a dream. Her father later explained that Candy did not mention her dream to him because she knew that he and her mother had a bad relationship.

In Family U, the child's (Fern's) mother had cancer. Fern had nightmares about her mother's death. She told her friends about her worries but not her father because she believed that her father did not care to talk about it. However, her friends' comments towards her mother's illness only made her worried even more. As a result, Fern fought with her friends, and her father did not know how to help her solve the peer conflicts.

In Families S and U, I sided with the children so that they were able to tell their father they loved their mother. As well, I encouraged each family to talk about the mother when the child wanted so that the father could be better able to help the child.

Another therapy technique embraced by the children was highlighting their strengths, which was emphasized in S-FT, NT and SFT. In this project, all my child clients loved to be praised. Most of them had an issue of having a low self-esteem. Highlighting their strengths made them feel good and encouraged. The younger children of Family V, aged six to nine years old, requested to do the same worksheets about strengths in almost every session. As well, Fern of family U and Kerri of Family V liked to do these worksheets especially when they had behavioral problems at school or at home.

However, the success of using S-FT, NT and SFT cannot work without a good therapeutic alliance. S-FT is cognitive and behavioral oriented. While both S-FT and NT are goal-oriented and reflective in the discourse, they lack the experiential nature or the "feeling part" to help clients tune in with their feelings. Children are very "experiential" in nature and they appeal very much to "feelings". It is thus very important to engage children in therapy with love and warmth. For example, my younger child clients liked me to pat them or hug them when they were revealing deep feelings such as their sadness, fear or negative experiences; whereas older children needed more praise and other forms of verbal support.

My younger child clients also revealed that they liked the therapy because they could play, eat, and talk. This safe and supportive environment in combination with the therapeutic alliance played a complementary role to S-FT and NT, by enriching the reflective process of the discourse with the experiential part or the "being with" element in the therapy.

Sometimes, S-FT, NT and SFT did not work well with my child clients. For example, there was one major problem in using NT in group session 4(a). In this group session, Kitty had experienced some unhappy issues during the week, but she refused to discuss her problems. Respecting her privacy, I pursued no further. Since NT emphasizes positive experiences, the talking of positive aspects had only intensified Kitty's unhappy feelings. In group session 4(b), the similar situation occurred with Hope. But this time, I helped Hope talk about her unhappy feelings before I conducted NT with the group.

Another limitation of using S-FT, NT and SFT was that I could not adhere strictly to use these therapies with my child clients. Very often, I needed to use a lot of reflective

skills to tune in their feelings. As well, it was difficult to engage younger children to communicate with me in every conversation using S-FT or NT. They might like to talk about something that was irrelevant to the topic that I prepared to discuss with S-FT and NT. Their cognitive and language levels sometimes required me to speak simple language instead of engaging them in a reflective discourse. When to use NT and S-FT often depended on the child's readiness and the topic of discussion.

In addition, my child clients usually led me as to where to go in the therapy more than the adult clients did. Children, especially the younger ones, seldom stayed in one spot for long and they might suddenly draw a picture, walk around or play with anything they could find. They often used whatever was available to express their feelings. When discussing serious issues, I might need to put aside my agenda of using S-FT, NT and SFT, but to communicate with them in the way they wanted.

For example, in a discussion with Candy of Family S about the loss of her mother, S-FT and NT worked effectively to help the child talk about her feelings and her experiences with her mother. However, while we were discussing her preferred future, she suddenly drew a picture on the flip chart to communicate with me. This created a dilemma as to whether I should use play therapy to discuss her picture. Play therapy was not an intervention method in this project, as bereavement was not initially a treatment issue in the intervention plan. However, in response to the child's need, I used play therapy as well as S-FT and NT to discuss her picture.

S-FT, NT and SFT with the parents

I found that S-FT and NT worked very well with parents' personal issues, which may have arisen from their child sexual abuse, family-of-origin, or relationships. As S-FT and NT emphasize strengths, these techniques were well received by parents. They felt good to hear about their strengths, to be aware of how they were able to cope with and survive through their life crises, as well as to notice that there were exceptions or unique outcomes in their lives.

None of the parents had problems in responding to the scaling questions (S-FT), and they found them a useful way to learn where they were at on the scales. I noticed that parents did not like to respond to these questions as much as children did. Children felt it was fun to answer such questions and liked me to use them many times in the same session. Parents were more rational in that they felt comfortable with the scale only when it was used occasionally, and in the right time with the right context.

I found that almost all my parent clients had tried to understand or explain their past issues and why misfortune happened to them. The effects questions (NT) helped them develop insights on how things had affected their lives. As well, the effects questions (NT) which explored how clients had affected their problems enhanced clients' awareness of their ability to take control of their own lives. I observed that the mother of Family V was especially interested in learning about the impacts of her issues on her life.

The use of S-FT and NT questions was a powerful means to enhance clients' confidence. During therapy, clients learned to interpret why things happened, make interpretations of their stories, develop new perspectives or find solutions. Clients often felt empowered when they were able to develop new perspectives by themselves. For

example, the father of Family S told me he previously thought that he was the "problem", causing the separation with his ex-girlfriend. Through the reflective discussions, he gradually realized that he should not blame himself for the separation and that his ex-girlfriend and her sister were the real "problem". He said he was glad that he had come to this conclusion by his own thinking.

With the parents, I also used dilemma questions (NT) and predicting setback questions (NT) to discuss relapse and ways of coping in future situations. Parents learned to think ahead with a realistic mindset and find their solutions. They felt they were better psychologically prepared should setbacks and dilemmas happen.

In Families T and V, the mothers witnessed family violence in their childhood. Both mothers felt closer to their father than to their mother. Both mothers felt that their own mother had pushed their father too far and elicited family violence. I used NT to discuss how easily the society condoned family violence on women. After therapy, the mothers realized that family violence was not acceptable no matter of what cause and found an alternative to family violence. For example, the mother of Family V thought that her father should simply walk away when he was angry with her mother.

The use of structural family therapy in parenting was well received by parents who were ready to change their family transactions. Families S, T, U and V had discussed the boundary issues, for they were either too loose or too rigid in parenting. They learned methods to move towards a parenting style where there were rules but also flexibility.

However, SFT did not work well with parents who did not want to be involved in therapy or were not ready for change. When using SFT, I challenged the family's transactional patterns and their realities. This may have led to confrontations with parents

that the symptom member was not to blame but other family members were. Nevertheless, this helped parents develop insights as how to help their children.

One example, the mother of Family B wanted me to focus working with her daughter, Hope, who was the symptom member of the family. When working with Hope, I noticed that her mother's partner had a negative influence on her coping with CSA trauma. The mother and I discussed her partner's family-of-origin, his sexual abuse and its impacts on his previous relationships. I explained to the mother that her partner's child sexual abuse was not his fault. However, I surmised that his child sexual abuse may have affected the current family transactional patterns, which in turn had adversely affected Hope's coping. The mother felt that her partner was not blamed for his sexual abuse and became less resistant to therapy. We discussed the positive as well as the negative aspects of her family transactional patterns. I also suggested alternative transactional patterns for change. Sometimes, the mother took my suggestion immediately by not grounding her daughter. However, when discussing her current relationship issues, or when inviting her partner to attend therapy, she was not willing to be involved.

It may be too early to evaluate all the therapeutic outcomes of both child and parent clients. Some therapeutic outcomes may manifest themselves later. For example, the sex education and self-esteem discussions may help children in their future relationships. When parents are ready for change, they may apply what they have learned from the therapy and put them into practice. In order to understand how well children and their parents can cope with their future issues, longitudinal studies are needed.

To comment, I found that S-FT, NT and SFT were very effective techniques to help my project clients develop new perspectives for individual change and family

transactional change. From clients' evaluations and my observations, they responded to these techniques very positively.

Learning experiences

This practicum would not be a success without the support and guidance of my committee members. As well, I am very thankful for their tremendous contribution of time in reviewing my work and helping me successfully complete the practicum.

Professor Don Fuchs, the Dean of Social Work, was my faculty advisor. Professor Fuchs provided supervision on a bi-weekly basis. During the practicum, Professor Fuchs supervised all the planning, recruitment, assessment and treatment intervention. He read all my written work about the project, which included the group proposal, the preparation work, the posters, and the correspondence to social agencies, schools and the mass media. He also read background reports, unit plans of intervention, process recordings of family and group therapies at EHCC, project certificates, letters to the clients and social agencies, and evaluations of all project clients. He was informed of the development of each family case. He reviewed all the tapes of group therapy and most of the tapes of individual, dyadic, and family therapies. As well, he read my practicum report and its various drafts.

David Charabin was my agency supervisor at EHCC. He provided informal consultation and was fully informed of my practicum progress. He provided support whenever there was such a need. David also read the group proposal, posters, letters to clients and social agencies, and the correspondence and other information related to the

project to social agencies, schools and the mass media. In addition, he read all the intake reports and the termination reports of Families I, J, and K.

Arla Marshall was my agency supervisor at the Family Centre. Arla provided me with a one-hour clinical supervision every two weeks. Arla was informed of the development of each family case. She reviewed four tapes of the family cases, each from Families R, S, U, and V. She read my correspondence to clients (which included a narrative letter to Family R) and social agencies, project certificates, and evaluations of clients. In addition, Arla read the group proposal and the practicum report.

In the summer of 2002, David had left EHCC. I am grateful and honored that Professor Harvy Frankel, the Associate Dean of the Social Work Faculty, kindly agreed to be the faculty member of my committee. Professor Frankel visited EHCC once a week, sometimes more. He provided support and consultation when needed. He read the termination reports of Families A, B and C, background reports, process recordings of family and group therapies at EHCC, and the practicum report.

In addition, the comprehensive literature review was an extremely big help. It enhanced my understanding of diverse client issues and helped my planning, assessment and intervention.

In my practicum at both EHCC and the Family Centre, planning was very important. I found that, after initial assessments, the developing of a unit plan about the intervention themes of each session was very helpful to my intervention. Although clients often came up with new issues after we had negotiated the goals, the unit plan of each family case provided me with a base for flexible changes to accommodate clients' changing needs.

Some studies indicate that many sexually abused children have intimacy or relationship issues in their adulthood (Pistorello & Follette, 1998; Bartoi & Kinder, 1998). I learned that topics related to sex education or discussions about healthy family relationships should be included in the therapy when working with sexually abused children. Discussing these topics could help these children develop a non-distorted view towards family relationships. In fact, girls from ages nine to fourteen in my project have shown their interest in boys. This further supported my thinking that the discussions of the mentioned topics could start as early as the pre-adolescent level. For my younger child client (Kerri of Family V) who had an interest in boys, I learned to accept her feelings and such thoughts, and found that the child was very open to discuss her ideas about boys.

The self-rating scales of this project provided clients an opportunity to assess their own psychological-emotional states. They were used in the pre-test and the post-test of a predesign (or pre-experimental design in Campbell & Stanley, 1966). This predesign, however, does not allow a systematic comparison of change between a non-intervention period and an intervention period (Bloom, Fischer, and Orme, 1999). I used the predesign as a measurement method in the project because it could measure what the project wanted to measure, which was the difference between the pre-test and the post-test scores. This difference indicated the change in the target problem when intervention was applied (Bloom, Fischer, and Orme, 1999).

I learned that evaluation methods should also be client-centred. I believe a predesign worked best for my project clients since it required them to write only one pre-test and one post-test. At the Family Centre, many of my child clients had reading

difficulties and some of them were at a young age who needed the mother and the student therapist to do the tests with them. It was convenient for the families to write only one pre-test and one post-test, especially when their therapy was so brief. In addition, using a predesign allowed therapy to be delivered in a timely fashion. As some of the families I worked with were high-risk families, it would be unrealistic to use other evaluation methods which required the therapist to withhold therapy from clients to maintain a non-intervention period before treatment could be applied. For example, in my first contact with Family A, the mother was in an emotional crisis that therapy had to be conducted with the family immediately.

Another observation, family has always been the most important environment to nurture and guide the child in his or her life. Some of my child clients, like Carol of Family R and Kerri of Family V, might not be able to love their mother as much as they wanted since they experienced the impacts of family dysfunction and they felt that their mother did not love them enough. However, they still desired the love from their mother and a better family relationship. I was further convinced that intervention should target to alleviate the family's dysfunctional patterns as well as to enhance parental love and family support.

Being a woman from Hong Kong with a Chinese cultural background, I was aware of the gender and cultural diversity issues during my practicum.

The gender issue was most notable when I checked with my clients about how they felt about videotaping. At the Family Centre, almost all the female clients in their first therapy session were very open to admit they did not feel comfortable with it, and most of them sat with their back against the camera so that it could tape only their back.

In contrast, the male clients claimed that they did not have a problem with videotaping. In fact, they did. In Family S, the father was much more relaxed and was more able to talk about his feelings when the videotaping room or equipment was not available in the last two sessions. In family V, the teenager looked nervous but said he was fine with videotaping. When I sat opposite him but with my back facing the camera, the teenager looked relaxed because the camera could tape only my back. The father of Family U admitted that he was a little bit anxious about the camera although he was attending therapy with his daughter. I observed that our culture prescribes our behavior according to our gender. It is acceptable for women to feel scared and to show such a feeling, but men have to show their courage.

Another gender issue was reflected in the male clients' perspectives towards women. In Family U, the father blamed his ex-wife's CSA issues for their relationship problems. I explained to him that CSA issues of a spouse might not necessarily be the only reason for a couple to break up (Pistorello & Follette, 1998). I explained that there were many other relationship issues could result in a break up, such as: the lack of love, the lack of communication, the feeling of incompatibility, infidelity, and financial problems. Besides, these problems could arise from both sides of the relationship. In Family S, the father showed what his attitude towards women from his previous relationships was like. His ex-partners were regarded only for their sexual value and he had little regard for them. We discussed how such attitudes might affect his daughter's perception about men and about her future relationships with men. The father agreed that his attitude towards women could have affected his daughter and he discovered that his daughter overheard his phone conversations with women.

In addition to the gender issues, I found that the discussion of sex in therapy was affected by assumptions about different cultures. Some adult clients may have had certain assumptions about my views towards sex because of my Chinese cultural background. They may have assumed that I would not feel comfortable discussing issues pertaining to sex since they may have thought that the discussion of this subject was a taboo to Chinese women. I also noticed that even though sex might be an area of concern to them, they did not initiate any discussions of this topic with me. However, when I brought up this topic, all my adult clients looked surprised and became very open in talking about their sexual issues. Most of my adult clients who were having relationship problems or were looking for a new relationship liked to talk about their struggles in this area and wanted to find solutions. Some parents talked about their sexual history to address unresolved issues arising from their child sexual abuse and family-of-origin, while other parents tried to understand how their sexual history might have affected how they interpreted their daughter's sexual abuse.

I did not feel embarrassed or uncomfortable when discussing clients' sexuality. In fact, when I worked with families in the social services in Hong Kong, sex was a very common topic in my work. My previous working experience helped me consider how clients' sexual issues were related to their self-esteem, family relationships, parenting, and other aspects of family functioning. Looking at clients' sexual issues in relation to their circumstances, I was better able to understand what they were going through from a wider perspective.

However, I do realize that my cultural values and family values on sexual issues were reflected in the therapy session of sex education for children. It was because in the

session, I took up the social work role of an educator. My own values were easily reflected when I asked the children about their thoughts towards casual sex, dating and future relationships. Some parents thought that I was traditional in my values as compared to theirs. At the end of the session, the parents revealed that they had never discussed the sexual issues the way I did with their child. Although my values appeared to be conservative to them, the families responded very positively to the topic, and Family B (both mother and daughter) told me that this session was the best session.

In working with my child clients, I did not find cultural diversity was an obstructive issue. Nowadays, children in Canada are exposed to diverse cultures at school, and through mass media, the Internet, and their consumption of international products. Some may even have traveled to different places with their parents and were exposed to different cultures. As well, I often remembered my mother's advice, "Be nice to children." My mother also advised me on how to relate to children. She always said, "When you like them and are good to them, they will like you too." My mother's advice was very true and helpful. Moreover, I believe that my training and personal qualities helped me work with them effectively. Although I had a different ethnic background, I felt that my child clients liked me and were very receptive towards me.

Working with clients of diverse ethnic backgrounds, I found that therapy was more effective when I looked at my clients as unique individuals. I learned to put away my assumptions that I acquired from books or from previous experiences, and only used this information as a reference when needed. In this way, I became more objective when clients were sharing who they were. Very often, when clients felt that the therapeutic conversations were helpful to them, they trusted me more and started to disclose their

personal struggles. They would explain their cultures or share information that would be helpful me for me to better understand their issues. For some clients, I needed to take the initiative to ask such information to facilitate the therapeutic process. I found that clients often co-operated and shared their stories. I felt putting away assumptions about clients had helped me know them more on a personal basis, and enhanced the therapeutic alliance and therapy outcome.

In this project, some high-risk families had many expectations towards this student project. Sometimes, it was dangerous to conduct visits especially in unpredictable situations. In a school visit, when I got off the bus and walked down the street to a school, a man tried to follow me. He stopped when a neighbor was coming out of his house. I was very frightened and walked as fast as I could to the school. Another example was, during a home visit, some important family members were late. In order to meet the whole family, I missed the last bus. I waited at a bus stop for an hour before another bus passed by to pick me up. The temperature was -29C. From these experiences, I learned the importance of self-care to help maintain a balanced lifestyle.

Conclusion

In this project, one of my original and primary goals was to run parallel groups for sexually abused children and their mothers. This goal was not realized because of the lack of parent clients. It brought about the new goals of providing individual, dyadic, and family therapies for CSA families. When the Children's Group had only two group members, I decided to enrich my practicum experience by working with non-CSA families. If I could have run both parallel groups, I would not have taken the new challenge to learn to work with clients with non-CSA issues. If there were more children in the Children's Group, there would not be sufficient time to provide intensive therapy and home visits to each child client and their family. If the Children's Group completed all twelve sessions, the report would be too long to include detailed group processes that illustrate the children's rehabilitation journey. Finally, my unfulfilled learning goals inspired new learning goals, which I have achieved.

To evaluate the project, solution-focused, narrative, and structural family therapies worked effectively with diverse treatment issues in the treatment modalities of individual, dyadic, family, and group therapies. S-FT, NT, SFT have demonstrated it could be used with a wide age range of clients, varying from five year old children to adults who were in their forties. In addition, clinical social work practice was not confined to be conducted at the agency, but could be provided at the community level, such as in schools or at clients' homes. Giving CSA presentations in schools raised the awareness of the CSA issue, its coping and prevention. Such awareness might help protect school children from sexual abuse, and make the community a healthier living environment.

From the verbal and written feedback of the families, clients of each family had a positive experience with therapy. They experienced some positive changes and learned new perspectives dealing with their issues. They became more aware of their strengths, family supports and resources. As well, they learned how to set new goals, handle dilemmas and setbacks, and face new challenges in life.

This project was unique in its extensive efforts to recruit clients through social agencies, schools and the mass media; to raise public awareness of the CSA issues at the community level; and to reach out to clients unable to attend therapy at the agency. The project was distinguished because of its high level of flexibility in intervention. The student therapist used individual, dyadic, family, and group therapies as treatment modalities; as well as solution-focused, narrative, and structural family therapies as intervention techniques. Finally, this project was very special as it discovered that narrative and solution-focused therapies could be used alone or in conjunction with play therapy to work with children as young as five years old. Since my sample of the five-year-old clients was very small, further research would be needed to validate this claim. Nevertheless, it challenged the conventional wisdom that play therapy was the sole appropriate treatment modality for young children. It also unveiled the truth that children have a lot of potential and sometimes are able to use various types of therapies when they are modified to fit the developmental stage and learning styles of the child.

References

Abell, N., Jones, B., Hudson, W.(1984). Revalidation of the index of self-esteem. Social Work Research & Abstracts, 20, 11-16.

Anderson, K. (1992). The parallel treatment program: An approach to treatment of intrafamilial sexual abuse. Winnipeg: University of Manitoba.

Andrews, A. B. (1994). Developing community systems for the primary presentation of family violence. Family Community Health, 16 (4), 1-9.

Aponte, H.J., & Van Deusen, J.M. (1981). Structural family therapy. In A.S. Gurman & D.P. Kniskern (Eds.), Handbook of family therapy (pp. 310-360). New York: Brunner/Mazel, Inc.

Avery, L., Massat, C., Lundy, M. (1998, June). The relationship between parent and child reports of parental supportiveness and psycho-pathology of sexually abused children. Child and Adolescent Social Work Journal, 15(3), 187-205.

Azar, S. T., Povilaitis, T. Y., Lauretti, A. F.m, & Pouquette, C. L. (1998). The current status of etiological theories in intrafamilial child maltreatment. In Lutzker (Ed.), Handbook of child abuse research and treatment (pp. 3-29). New York: Plenum Press.

Bagley, C., & Young, L. (1998). Long-term evaluation of group counseling for women with a history of child sexual abuse: Focus on depression, self-esteem, suicidal behaviors and social support. Social Work with Groups, 21 (3), 63-73.

Barone, C., Iscoe, E., Trickett, E., & Schmid, K. (1998). An ecologically differentiated, multifactor model of adolescent network orientation. American Journal of Community Psychology, 26(3), 403-423.

Bartoi, M. G., & Kinder, B. N. (1998). Effects of child and adult sexual abuse on adult sexuality. Journal of Sex & Marital Therapy, 24, 75-90.

Beck, A.T., & Beck, R. W. (1992, December). Screening depressed patients in family practice: A rapid technic. Post Graduate Medicine, 81-85.

Beck, A. T. (1987). Beck Depression Inventory. Test Critiques Compendium, 24-28.

Beck, R. L. (1997). Training in family systems theory: A group experience. Group, 21 (3), 255-265.

Beck, A., Steer, R., & Garbin, M. (1988). Psychometric properties of the Beck depression inventory: Twenty-five years of evaluation. Clinical Psychology Review, 8, 77-100.

Berg, I. K. (1991). Family Preservation: A Brief Therapy Workbook. London: BT Press.

Berg, I. K., & De Jong, P. (1996, June). Solution-building conversations: Co-constructing a sense of competence with clients. Families in Society: The Journal of Contemporary Human Services, 376-391.

Berg, I. K., & De Shazer, S. (1993). Making numbers talk: Language in therapy. In S. Friedman (Ed.), The new language of chance: Constructive collaboration in psychotherapy (pp.1-24). New York, London: The Guilford Press.

Bernard, H. S. (1995, Summer). The dynamics of the co-therapy relationship: A symposium. Group, 19 (2), 67-70.

Beth, P. (1999, Feb.). Childhood and adolescent abuse history, fear of negative evaluation, and social interaction self-statements: A correlational analysis. Child and Adolescent Social Work Journal, 16 (1), 47-65.

Betito, L., & Doyle, A. (1993, Winter). Fantasy and reality: An essay on incest. Journal of Sex & Marital Therapy, 19 (4), 308-314.

Beutler, L. E., Williams, R. E., & Zetzer, H. A. (1994, Summer/Fall). Efficacy of treatment for victims of child sexual abuse. The Future of Children, 4 (2), 156-175.

Biesenthal, L., & Clement, J. (1992). Technical Report Canadian Statistics on Child Sexual Abuse (unedited). Ottawa: Research and statistics Directorate: Department of Justice Canada.

Birleson, P. (1981). The validity of depressive disorder in childhood and the development of a self-rating scale: A research report. J. Child Psycholo. Psychiat. 22, 73-88.

Bischof, G. P. (1993). Solution-focused brief therapy and experimental family therapy activator: An integration. Journal of Systemic Therapies, 12(3), 61-70.

Bloom, M., Fischer, J., & Orme, J. (1999). Evaluating practice. Boston: Allyn & Bacon.

Borden, W. (1992, March). Narrative perspectives in psychosocial intervention following adverse life events. Social Work, 37(2), 135-141.

Boscolo, L., & Bertrando, P. (1992, June). The reflexive loop of past, present, and future in systemic therapy and consultation. Family Process, 31, 119-133.

Briere, J., & Elliott, D. (1994, Summer/Fall). Immediate and long-term impacts of child sexual abuse. The Future of Children, 4 (2), 54-69.

Briere, J. (1992). Methodological issues in the study of sexual abuse effects. Journal of Consulting and Clinical Psychology, 60 (2), 196-203.

Briere, J. (1992). Child abuse trauma: Theory and treatment of the lasting effects. California, London, New Delhi: Sage Publications.

Brook, D. W., Gordon, C., & Meadow, H. (1988). Ethnicity, culture, and group psychotherapy. Group, 22 (2), 53-80.

Bubenzer, D. L., & West, J. D. (1994, Jan.). Michael White and the narrative perspective in therapy. Family Journal, 2 (1), 71-84.

Burgoyne, M. A. (1985). Treatment of child sexual abuse. In C. M. Movzakitis, & Varghese, R. (Eds.), Social work treatment with abused and neglected children (pp. 297-318). Illinois: Charles C. Thomas Publisher.

Campbell, D., & Stanley, J. (1966). Experimental and quasi-experimental designs for research. Chicago: Rand McNally & Company.

Caners, M. (2000). Structural family therapy: A social work practicum. Winnipeg: University of Manitoba.

Carnegie, D. (1998). Group work with adult female survivors of childhood sexual abuse utilizing an empowerment model of intervention. Winnipeg: University of Manitoba.

Carbonell, D. M., & Parteleno-Barehmi, C. (1991). Psychodrama groups for girls coping with trauma. International Journal of Group Psychotherapy, 49 (3), 285-306.

Cecchin, G. (1987, Dec.). Hypothesizing, circularity, and neutrality revisited: An invitation to curiosity. Family Process, 26(4), 405-413.

Cermak, P., & Molidor, C. (1996, October). Male victims of child sexual abuse. Child and Adolescent Social Work Journal, 13 (5), 285-400.

Child Protection Centre/Children's Hospital (1990, June). Traumatic Dynamics of Child Sexual Abuse [Brochure]. Children's Hospital: Child Protection Centre.

Cochran, M. (1993). Parenting and social network. In T. Luster & L. Okagaki (Eds.). Parenting: An ecological perspective (pp.149-178). New Jersey: Erlbaum Associates.

Colapinto, J. (1982). Structural family therapy. In A. M. Horne & M.M. Ohlsen (Eds.), Family counselling and therapy (pp. 112-140). Illinois: F.E. Peacock Publishers, Inc.

Colapinto, J. (1991). Structural family therapy. In A.S. Gurman & D.P. Kniskern (Eds.), Handbook of family therapy (pp.417-443). New York: Brunner/Mazel, Inc.

Conte, J. R., Schuerman, J. R. (1987). Factors associated with an increased impact of child sexual abuse. Child Abuse & Neglect, 11, 201-211.

Corcoran, K., & Fischer, J. (2000). Measures for clinical practice (V. 1 & 2). New York: The Free Press.

Corden, B. F. (1994). Structured Adolescent Psychotherapy Groups. Sarasota, Fl.: Professional Resource Press.

Courtois, C. (1988). Healing the incest wound: Adult survivors in therapy. New York: W. W. Norton.

Damon, L., & Waterman, J. (1986). Parallel group treatment of children and their mothers. In K. MacFarlane, & J. Waterman (Eds.). Sexual abuse of young children: Evaluation and treatment (pp.244-298). New York: The Guilford Press.

Deacon, S.A. (1999). Explore your family: An experiential family-of-origin workshop. Family Therapy, 26 (2), 87-102.

Dean, R.G. (1998, Spring). A narrative approach to groups. Clinical Social Work Journal, 26 (1), 23-36.

De Jong, P., Miller, S. D. (1995). How to interview for client strengths. Social Work, 40(6), 729-736.

De Shazer, S. (1997, March). Some thoughts on language use in therapy. Contemporary Family Therapy, 19(1), 133-141.

De Shazer, S., & Berg, I. K. (1997). 'What works?' Remarks on research aspects of solution-focused brief therapy. Journal of Family Therapy, 19, 121-124.

De Shazer, S., Berg, I. K., Lipchik, E., Nunnally, E., Molnar, A., Gingerich, W., & Weiner-Davis, M. (1986, June). Brief therapy: Focused solution development. Family Process, 25, 207-221.

De Shazer, S., & Molar, A. (1984). Four useful interventions in brief family therapy. Journal of Marital and Family Therapy, 10(3), 297-304.

Dickerson, V. C., & Zimmerman, J. L. (1993). A narrative approach to families with adolescents. In S. Friedman (Ed.), The new language of chance: Constructive collaboration in psychotherapy (pp.226-250). New York, London: The Guilford Press.

Dolan, Y. M. (1993). Continuum of conscious/unconscious techniques for abuse survivors [Brochure].

Dolan, Y.M. (1991). Resolving sexual abuse. New & York: W.W. Norton.

Downing, J., & Pieirce, K. (1993, Nov.). A community network for helping families. School Cousnselor, 41(2), 102-109.

Durrant, M., & Kowalski, K. (1993). Enhancing views of competence. In S. Friedman (Ed.), The new language of chance: Constructive collaboration in psychotherapy (pp.107-137). New York, London: The Guilford Press.

Duvall, J. D., & Beier, J. M. (1995). Passion, commitment, and common sense: A unique discussion with Insoo Kim Berg and Michael White. Journal of Systemic Therapies, 14 (3), 57-80.

Dwyer, D. C., Smokowski, P. R., Bricout, J. C., & Wodarski, J. S. (1993, Summer). Domestic violence research: Theoretical and practice implications for social work. Clinical Social Work Journal, 23 (2), 185-198.

Dyck, T. (2000). Narrative therapy with individual adults. Winnipeg: University of Manitoba.

Everson, M., Hunter, W., Runyon, D., Edelsohn, G., and Coulter, M. (1989). Maternal support following disclosure of incest. Amer. J. Orthopsychiat., 59(2), 197-207.

Faller, K.C. (1988). Child sexual abuse: An interdisciplinary manual for diagnosis, case management, and treatment. New York: Columbia University Press.

Fanger, M. T. (1993). After the shift: Time-effective treatment in the possible frame. In S. Friedman (Ed.), The new language of chance: Constructive collaboration in psychotherapy (pp.85-91). New York, London: The Guilford Press.

Feiring, C., and Taska, L., et al. (1998). Social support and children's and adolescents' adaptation to sexual abuse. Journal of International Violence, 13(2), 240-257.

Finkelbor, D., & Browne, A. (1998). Assessing the long term impact of child sexual abuse: A review and conceptualization. In L.A.Walker (Ed.), Handbook on

sexual abuse of children: Assessment and treatment issues (pp.55-71). New York: Springer Publishing Company.

Finkelhor, D. (1986). Prevention approaches to child sexual abuse. In M. Lystad (Ed.), Violence in the house: Interdisciplinary perspectives (pp. 296-309). New York: Brunner/Mazel.

Folkman, S., Chesney, M., Mukusick, L., Ironson, G., Johnson, D., & Coates, T. (1991). Translating coping theory into an intervention. In J. Eckenrode (Ed.). The social context of coping (pp.239-260). New York: Plenum Press.

Franklin, C., Corcoran, J., Nowicki, J., & Streeter, C.(1997). Using client self-anchored scales to measure outcomes in solution-focused therapy. Journal of Systemic Therapies, 16 (3), 246-265.

Fraser, J. S. (1995). Process, problems, and solutions in brief therapy. Journal of Marital and Family Therapy, 21(3), 265-279.

Freedman, J., & Combz (1996). Narrative Therapy. New York: W.W. Norton.

Friedrich, W. N. (1990). Psychotherapy of sexually abused children and their families. New York: W. W. Norton & Company. Chapter 4: Treatment issues and case management (pp. 100-130).

Frydenberg, E.(1999). Understanding coping: Towards a comprehensive theoretical framework. In E. Frydenberg (Ed.), Learning to cope: Developing as a person in complex societies (pp.9-30). University of Melborne: Oxford University Press.

Fuchs, D. (1993). Building on the strengths of family and neighborhood social network ties for the prevention of child maltreatment: An ecological approach. In M. R.

Rodway & B.Trute (Eds.), The ecological perspective in family-centred therapy (pp.69-97). Lewiston, N.Y.: The Edwin Mellen Press.

Fuchs, D. (1995). Preserving and strengthening families and protecting children: Social network intervention, a balanced approach to the prevention of child maltreatment. In J. Hudson & B. Galaway (Eds.), Child welfare in Canada: Research and policy implications (pp.113-122). Toronto: Thompson Educational Publishing.

Garland, J., Jones, H., & Kolodny, R. (1965). A model for stages of development in social work groups. In S. Bernstein, Explorations in group work: Essays in theory and practice. Boston: Boston University School of Social Work.

Gladding, S.T. (1998). Family Therapy: History, Theory & Practice (2nd ed.). New York : Prentice Hall Inc.

Graham, B. (1997). Just as I am. Toronto: Harper Collins Publishers Ltd.

Greenwald, R., & Rubin, A. (1999, Jan.). Assessment of post-traumatic symptoms in children: Development and preliminary validation of parent and child scales. Research on social work practice, 9 (1), 61-75.

Hadfield, K. (2000). A structural family therapy approach to counseling families. Winnipeg: University of Manitoba.

Health Canada (1999). The "State of the Art" in Child Abuse Prevention, 1997. Ottawa, Ontario: Minister of Public Works and Government Services Canada.

Health Canada (1997). Child Sexual Abuse. Ottawa: The National Clearinghouse on Family Violence.

Health and Welfare Canada (1990). Reaching for solutions. Ottawa, Ontario: Minister of Supplies and Services Canada.

Henderson, A. (1993). Abused women's perceptions of their children's experience. Canada Mental Health, 7-10.

Herman-Stahl, M., & Petersen, A. C. (1999). Depressive symptoms during adolescence: direct and stress-buffering effects of coping, control beliefs, and family relationships. Journal of Applied Developmental Psychology, 20 (1), 45-62.

Hetherington, E. M., & Parke, R. D. (1986). Child psychology: A contemporary viewpoint. New York: McGraw-Hill, Inc.

Hiebert-Murphy, D., De Luca, R. V., & Runtz, M. (1992, April). Group treatment for sexually abused girls: Evaluating outcome. Families in Society, 205-213.

Holland, T. P., & Kilpatrick, A. C. (1993, Fall). Using narrative techniques to enhance multicultural practice. Journal of Social Work Education, 29 (3), 302-308.

Horowitz, M., Wilner, N., & Alvarez, W. (1979, May). Impact of Event Scale: A measure of subjective stress. Psychosomatic Medicine, 41 (3), 209-218.

Hoyle, R., Kernis, M., Leary, M., & Baldwin, M. (1999). Selfhood: Identity, esteem, regulation. Colorado: Westview Press.

Huber, Charles, H. (1996, April). Taking an evolutionary perspective: The solution-oriented genogram. Family Journal, 4(2), 152-155.

Impara, J., & Plake, B. (1998). The 13th mental measurement yearbook. Buros Institute of Mental Measures: University of Nebraska.

Israelstam, K. (1998). Contrasting four major family therapy paradigms: Implications for family therapy training. Journal of Family Therapy, 10, 179-196.

Jackson, E. (1974). Grief. In A. Grollman (Ed.), Concerning death: A practice guide for the living (pp.1-12). Boston: Beacon Press.

Johnston, S. (1997). The use of art and play therapy with victims of sexual abuse: A review of the literature. Family Therapy, 24 (2), 101-113.

Kashani, J. H., Daniel, A. E., Dandoy, A., & Holcomb, W. R. (1992, March). Family violence: Impact on children. J. Am. Acad. Child Adolesc. Psychiary, 31 (2), 181-189.

Kemp, S., Whittaker, J., Tracy, E. (1997). Person-environment Practice. New York: Aldine De Gruyter.

Kiser, D. J., & Piercy, F. P. (1993). The integration of emotion in solution-focused therapy. Journal of Marital and Family Therapy, 19(3), 232-242.

Krane, J. (1990). Explanations of child sexual abuse: A review and critique from a feminist perspective. Canadian Review of Social Policy, 25, 11-17.

Kuehl, B. P. (1995). The solution-oriented genogram: A collaborative approach. Journal of Marital and Family Therapy, 21 (3), 239-250.

Kymissis, P., & Halperin, D. A. (Eds.). (1996). Group Psychotherapy with Children and Adolescents. Washington, D. C. : American Psychiatric Press.

Larsen, D., Attkisson, C., Hargreaves, W., & Nguyen, T. (1979). Assessment of client/patient satisfaction: Development of a general scale. Evaluation and Program Planning , 2, 197-207.

Laube, J. J. (1998). Therapist role in narrative group psychotherapy. Group, 22 (4), 227-243.

Laube, J.J., & Trefz, S. (1994). Group therapy using a narrative theory framework: Application to treatment of depression. Journal of Systemic Therapies, 13 (2), 29-37.

Leibowitz, S., Mendelson, M., & Michelson, C. (1999). Child rape: Extending the therapeutic intervention to include the mother-child dyad. South African Journal of Psychology, 29 (3), 103-114.

Levesque, R.(1994). Sex differences in the experience of child sexual victimization. Journal of Family Violence, 9(4), 357-369.

Lipchik, E.C. (1993). "Both/And" solutions. In S. Friedman (Ed.), The new language of chance: Constructive collaboration in psychotherapy (pp.27-49). New York, London: The Guilford Press.

Long, K. A. (1986, Jan.). Cultural considerations in the assessment and treatment of intrafamilial abuse. Amer. J. Orthopsychiat., 56 (1), 131-136.

Lovell, M. (1988). Group International Skills Training to Build Social Support and Community Linkages with Non-offending Parents. B. C.: University of British Columbia, 1-5.

Lynch, G. (1997, Dec.). The role of community and narrative in the work of the therapist: A post-modern theory of the therapist's engagement in the therapeutic process. Counseling Psychology Quarterly, 10 (4), 353-364.

Malekoff, A., & Laser, M. (1999). Addressing difference in group work with children and young adolescents. Social Work with Groups, 21 (4), 23-34.

Manitoba Justice Corrections (1995). Partner abuse short term group program. Manitoba: Manitoba Justice Corrections.

Masson, H., O'byrne, P. (1990). The family systems approach: A help or hindrance? In The Violence Against Children Study Group (Ed.), Taking child abuse seriously (pp.167-193). London: University of Hyman.

Mathews, F. (1995). Combining Voices: Supporting paths of healing in adult female and male survivors of sexual abuse. Ottawa: Health Canada.

McLeod, J., & Balamoutsou, S. (1996. March). Representing narrative process in therapy: Qualitative analysis of a single case. Counseling Psychology Quarterly, 9 (1), 61-77.

Mennen, F. E., & Meadow, D. (1994). A preliminary study of the factors related to trauma in childhood sexual abuse. Journal of Family Violence, 19 (2), 125-141.

Mills, S. D., & Sprenkle, D. H. (1995, Oct.). Family therapy in the postmodern era. Family Relations, 44 (4), 368-377.

Minuchin, S. (1974). Families and family therapy. Cambridge, MA: Harvard University Press.

Minuchin, S., & Fishman, H.C. (1981). Family therapy techniques. Cambridge, MA: Harvard University Press.

Minuchin, S., & Nichols, M.P. (1993). Family healing: Tales of hope and renewal from family therapy. New York: The Free Press.

Minuchin, S. (1998). Where is the family in narrative family therapy? Journal of Marital and Family Therapy, 24(4), 397-403.

Mittelmeier, C., & Friedman, S. (1993). Toward a mutual understanding: Constructing solutions with families. In S. Friedman (Ed.), The new language of chance:

Constructive collaboration in psychotherapy (pp.158-181). New York, London: The Guilford Press.

Morrissette, P. (1999, April). Post-traumatic stress disorder in childhood sexual abuse: A synthesis and analysis of theoretical models. Child and Adolescent Social Work Journal, 16 (2), 77-99.

Mosconi, A. Gonzo, M., Sorgato, R., Tirelli, M., & Tomas, M. (1999). From counterparadox and the Milan Modal to therapeutic conversation and the Milan Systemic Approach. Origin and development of the Milan Centre for family therapy. In U. Gielen, & A. Comunian. International approaches to the family and family therapy: Studies on international and cross-cultural psychology (pp.9-42). Italy: Unipass.

Nakkab, S., & Hernandez, M. (1998). Group psychotherapy in the context of cultural diversity. Group, 22 (2), 95-103.

Neberper, C., Gremy, L., and Waternaux, C. (1993). Mother of sexually abused children: Trauma and repair in longitudinal perspective. Amer. J. Orthopsychiat, 63(1), 92-102.

Nelson, T., Fleuridas, C., & Rosenthal, D. (1986). The evolution of circular questions: Training family therapists. Journal of Marital and Family Therapy, 12(2), 113-127.

Nelson, T., Heilbrun, G., & Figley, C. (1993). Basic family therapy skills, IV: Transgenerational theories of family therapy. Journal of Marital and Family Therapy, 19(3), 253-266.

Nelson, T. S., & Utesch, W.E. (1990). Clinical assessment of structural family therapy constructs. Family Therapy,17, 233-248.

Nevid, J., Fichner-Rathus, L., & Rathus, S. (1995). Human sexuality in a world of diversity. Boston: Allyn & Bacon.

Newberger, C.M., Gremy, I.M., Waternaux, C.M., Newberger, E.H. (1993, Jan.) Mothers of sexually abused children: Trauma and repair in longitudinal perspective. Amer. J. Orthopsychiat., 63 (1), 92-102.

Nichols, M. P., & Schwartz, R. C. (1998). Family Therapy: Concepts and Methods (4th ed.). Boston: Allyn & Bacon.

Nicholas, M., & Forrester, A. (1999). Advantages of heterogeneous therapy groups in the psychotherapy of the traumatically abused: Treating the problem as well as the person. International Journal of Group Psychotherapy, 49 (3), 322-342.

Nylund, D., Corsiglia, V., & Stockton, K. P. (1994). Becoming solution~~-focused~~ forced in brief therapy: Remembering something important we already knew. Journal of Systemic Therapies, 13 (1), 5-11.

O' Hanlon, B. (1994, November/December). The third wave. Networker, 19-29.

Pardeck, J. T. (1989). Family therapy as a treatment approach to child abuse. Family Therapy, xvi (2), 113-120.

Pardeck, J. A. & Pardeck, J. T. (1990). Family factors related to adolescent autonomy. Family Therapy, xvii (3), 223-231.

Pearce, J. W., & Pezzot-Pearce, T. D. (1992). Attachment theory and its implications for psychotherapy with maltreated children. Child Abuse and Neglect, 18, 425-438.

Penn, P. (1982, Sept.). Circular questioning. Family Process, 21(3), 267-280.

Pistorello, J., & Follette, V. (1998, Oct.). Childhood sexual abuse and couples' relationships: Female survivors' reports in therapy groups. Journal of Marital and Family Therapy, 24 (4), 473-485.

Ratan, T. S., & Stone, W. N. (1993). Psychodynamic group psychotherapy (2nd ed.). New York: The Guilford Press.

Real, T. (1990). The therapeutic use of self in constructionist/systemic therapy. Family Process, 29(3), 255-272.

Regehr, C., & Cadell, S. (1999). Secondary trauma in sexual assault crisis work: Implications for therapists and therapy. Canadian Social Work, 1, 56-63.

Reinhart, M. (1987). Sexually abused boys. Child Abuse & Neglect, 11, 229-235.

Rice-Smith, E. (1993). Group psychotherapy with sexually abused children. In H. I., Kaplan, & B. J., Sadock. Comprehensive Group Psychotherapy (3rd ed.). (pp.522-550). Baltimore: Williams and Wilkins.

Richardson, R. W. (1999). Family Ties That Bind (3rd ed.). British Columbia, Washington: International Self-Counsel Press Ltd.

Richter, N. L., Snider, E., & Gorey, K. M. (1997, Jan.). Group work intervention with female survivors of childhood sexual abuse. Research on Social Work Practice, 7 (1), 53-69.

Rosenberg, M. (1979). Conceiving the self. New York: Basic Books.

Rosenfeld, L., & Richman, J. (1998, Oct.). Low social support among at-risk adolescents. Social Work in Education, 20(4), 245-261.

Rybarik, M., Dosch, M., Gilmore, G., & Krajewski, S. (1995). Violence in relationships: A seventh grade inventory of knowledge and attitudes. Journal of Family Violence, 10(2), 223-251.

Sauter, J., & Franklin, C. (1998, May). Assessing post-traumatic stress disorder in children: Diagnostic and measurement strategies. Research on Social Work Practice, 8 (3), 251-270.

Sayger, T. V. (1996, May). Creating resilient children and empowering families using a multi-family group process. Journal for Specialists in Group Work, 21 (2), 81-90.

Schmidt, E. (1996, Aug.). Brief psychotherapy with children and adolescents: A developmental perspective. Child and Adolescent Social Work Journal, 13(4), 275-286.

Schwartz, R. (1999, April). Narrative therapy expands and contracts family therapy's horizons. Journal of Marital and Family Therapy, 25 (2), 263-267.

Selekman, M. (1993). Solution-oriented brief therapy with difficult adolescents. In S. Friedman (Ed.), The new language of chance: Constructive collaboration in psychotherapy (pp.138-157). New York, London: The Guilford Press.

Selvini, M., Boscolo, L., Cecchin, G., & Prata, G. (1980, March). Hypothesizing-Circularity-Neutrality: Three guidelines for the conductor of the session. Family Process, 19(1), 3-12.

Sgroi, S. M., Blick, L. C., & Porter, F. S. (1982). A conceptual framework for child sexual abuse. In S. M. Sgroi (Ed.), Handbook of clinical intervention in child sexual abuse (pp. 9-42). Mass.: Lexington Books.

Shulman, L. (1997). The skills of helping: Individuals, families, and groups (3rd ed.). Itasca, Illinois: F.E. Peacock Publishers, Inc.

Spencer,C., Nicholson, M. (1988). Incest investigation and treatment planning by child protective Services. In L. Walker (Ed.), Handbook on sexual abuse of children (pp. 152-174). New York: Springer Publishing Company.

Stewart, D. W. (1995). Termination. In D. G. Martin & A. D. Moore (Eds.), First steps in the art of intervention - A guidebook for trainers in helping professions. Pacific Grove: Brooks/Cole Publishers.

Tomm, K. (1991). The Courage to Protest: A Commentary on Michael White's "Deconstruction and Therapy" [Brochure]. 1-13.

Tomm, K. (1988, March). Interventive interviewing: Part III. Intending to ask lineal, circular, strategic, or reflexive questions? Family Process, 27(1), 1-15.

Tomm, K. (1987, June). Interventive interviewing: Part II. Reflective questioning as a means to enable self-healing. Family Process, 26(2), 167-183.

Tomm, K. (1984, April). One perspective on the Milan Systemic Approach: Part I. Overview of development, theory and practice. Journal of Marital and Family Therapy, 10(2), 113-125.

Tomm, K. (1984, July). One perspective on the Milan Systemic Approach: Part II. Description of session format, interviewing style and interventions. Journal of Marital and Family Therapy, 10 (3), 253-271.

Tong, L., Oates, K., & McDowell, M. (1987). Personality development following sexual abuse. Child Abuse & Neglect, 11, 371-383.

Toseland, R., & Rivas, R. (1998). An introduction to group work practice (3rd ed.). Boston: Allyn and Bacon.

Tracy, E. M., & Whittaker, J. K. (1990, Oct.). The social network map: Assessing social support in clinical practice. Families in Society, 461-470.

Traumagenic Dynamics of Child Sexual Abuse (1990, June). Children's Hospital/Child Protection Centre, 1-5.

Treftlin, L. A. (1996). Multi-Modal Treatment of Adolescent Girls Who Have Been Sexually Abused. Winnipeg: University of Manitoba.

Tremblay, C., Hebert, M., & Piche, C. (1999). Coping with strategies and social support as mediators of consequences in child sexual abuse victims. Child Abuse and Neglect, 23(9), 929-945.

Trute, B., Adkins, E., MacDonald. G., Vaughan-Jones, G., & Fedoruk, T. (1993). Reducing stress in families following the disclosure of child sexual abuse: Key practice elements for family crisis work. In M. R. Rodway & B. Trute (Eds.), The ecological perspective in family-centred therapy (pp. 125-150). Lewiston., N. Y. : The Edwin Mellen Press.

Tuttman, S. (1993). Countertransference and transference in groups. In H. I. Kaplan, & B. J. Sadock (Eds.), Comprehensive Group Psychotherapy (3rd ed., pp. 88-104). Baltimore: Williams and Wilkins.

Weiner-Davies, M. (1993). Solution-focused therapy: A wellness approach [Brochure], 1-7.

White, M. (1991). Deconstruction and therapy. Dulwich Centre Newsletter, 3, 21-40.

White, M. (1991). Conscious Purpose and Commitment Exercise. South Australia: Dulwich Centre, 1-11.

White, M., & Epston, D. (1990). Narrative Means to Therapeutic Ends. New York, London: W.W. Norton.

White, M. (1988/9, Summer). The externalizing of the problem and the re-authoring of lives and relationships. Dulwich Centre Newsletter, 1-25.

White, M. (1986, June). Negative explanation, restraint, and double description: A template for family therapy. Family Process, 25 (2), 169-184.

Wickenden, P. (2000). Co-locating narrative and solution-focused theory in a family based therapy with children affected by extrafamilial sexual abuse. Winnipeg: University of Manitoba.

Wickham, E. (1993). Group treatment in social work: An integration of therapy and practice. Toronto: Thompson Educational Publishing.

Zimmerman, J. L., & Dickerson, V.C. (1996). If Problems Talked: Narrative Therapy in Action. New York: Guilford Press.

Zimmerman, J.L., & Dickerson, V. C. (1994, Sept.). Using a narrative metaphor: Implications for theory and clinical practice. Family Process, 33, 233-241.

Zimmerman, J. L., & Dickerson, V. C. (1993). A narrative approach to families with adolescents. In S. Friedman (Ed.), The new language of chance: Constructive collaboration in psychotherapy (pp.226-250). New York, London: The Guilford Press.

Appendix A

Social agencies and schools visited

I am very grateful to the following agencies and schools and their staff who allowed my visits, and/or referred potential clients to this project. As well, I am very thankful to the people who talked to me during our telephone contacts.

Social agencies I visited:

In the year of 2000

Klinic	Josephine Buck
New Directions	Marlene Richard (I visited the agency but Marlene was ill)
Knowles Centre	Dr. Burdz

In the year of 2001

Central C/FS	Pat Cox, Intake /CSA Unit
	Karen Macdonald, Family Services
Concordia Office C/FS	Terry Williams
C/FS, Permanency Planning/Adoption Unit	
Jarvis Office	Holly Gammon & team
Bannerman Office	Rob Humniski & team
Ness Office	Rob Rogala & team
Stafford Office	Bob Boulet
Psychological Service Centre	Dr. Thomas (3 visits)
Mount Carmel Clinic	Mr. Thomas Kean
Health Sciences	Social workers
Inner City Youth Alive	Catherine

Schools that I visited in the year of 2001:

- Winnipeg Division No. 1 Office

(School counselors/Elementary schools)

- Luxton
- Pinkham
- Rockwood
- Strathcona
- Wellington

(Teacher/Junior High School)

- Somerset Building

(School counselors/ Junior high schools)

- General Wolfe — Ellen Karlinsky at school
- Gordon Bell — Beverly Krahn at school
- Hugh John Macdonald — Tom Weber at a coffee shop near campus

Schools where I conducted presentations:

May 8, 2001	General Wolfe	grade 8 (2 classes)
June 1, 2001	Gordon Bell	grade 7 (1 class), grade 8 (1 class)
May 18,2001	Hugh John Macdonald	grade 7 (2 classes)
		grade 8 (2 classes)
		grade 9 (2 classes)

Referrals from C/FS and a community friend:

Intake, Central C/FS	3 (Two attended group therapy, one had no phone and lost contact.)
Concordia Office, C/FS	2 (One had no phone and lost contact; one did not show up.)
Strathcona Office, C/FS	1 (Potential custody fights, did not work out.)
NE office, C/FS	1 (The mother did not think the project could meet her needs.)
A community friend	1 (The child was too young and was not ready for the group.)

Referrals from schools:

Luxton	1(Attended one individual therapy session and four group sessions.)
Strathcona	1 (Referred me to Strathcona, C/FS.)
Wellington	2 (One was the same child referred by Intake, Central C/FS. One studied at Rockwood.)
Rockwood	1 (Attended counseling at school.)
General Wolfe	1(Attended counseling at Somerset Building.)

Other referrals:

Aboriginal Centre	1 (Sexually abused by a third party.)
Strathcona School	3 (Sexually abused by a third party, ranged from Grades 3 to 6.)

Appendix B

Letter to CBC Radio

April 4, 2001
To Marianne Kloak/CBC Radio,

Thanks for calling me. You have asked me what is special about my project. It helps me think about the uniqueness of this project. I think it is very difficult to know the real answer until we have really finished the project. I mean I have to experience it before I can really know.

Here, I would like to share my story with you. Maybe, my project can help clients get the timely help as I did during my mother's passing.

On Dec 28, 2000, about 4:30a.m., my mom suddenly felt extremely uncomfortable. Mom wanted to pass away at home so we were very hesitant if we should send her to the emergency. The doctor from the Sunny Brook Hospital (Ontario) gave us some very good advice on the phone and it's OK to let mom stay at home. I asked him how to help mom feel more comfortable in her last moments should any critical incidents happen again. He told me to attend to my mom, to talk to her. Very often, when the patient is in pain, the family members tend to talk to each other and forget the patient.

My mom's community doctor didn't come until 10:30pm. When my mother was in intense pain around 7:00p.m., I suddenly remembered the doctor's advice: to attend to my mother. I was lucky to be sitting by her side where I could look at her face. I talked to her a little bit, comforted her and put morphine into her mouth, and I touched her face and hand. Mom knew it was me and grasped my hand, though she was closing her eyes.

In my mother's last two weeks, I became out of myself and didn't know what to do, nor could I feel. Nevertheless, during my mom's passing, the doctor's advice helped me a lot to make my mom feel being attended to and loved. And, during my mom's passing, the only thing I could manage to do was to love her.

In my project, I use counseling approaches which emphasize the strengths of clients to help group members cope with the child's trauma and their daily life difficulties. When the parent-child relationship improves, I believe the love within such relationship can be a very strong base to help them recover. Love is a very powerful resource to recovery. Learning parenting skills helps parents be better able to provide guidance to their children. As well, it helps children cope with their psychological and emotional changes, as well as their traumatic experiences with sexual abuse.

My project is a useful means to facilitate clients' recovery process. Clients play a big part in contributing to their rehabilitation. My project is unique because it emphasizes the importance of healing, family, love and parental guidance.

Monita

Appendix C

Inspiration

The discussion on self-acceptance was inspired by my mother's signature in the book, "Just as I am". I would like to include this page which has my mother's signature as an appendix in this practicum report.

Just As I Am

THE AUTOBIOGRAPHY OF BILLY GRAHAM

To MONjta

Billy Graham

From MOM

1998

HarperCollins*PublishersLtd*

Appendix D

Gift tables

I would like to thank the following people who sponsored this project with some of the gifts. They are Gen, Catherine, Eric and two anonymous friends. They supported the project with all the soft toys, shiny as well as non-shiny Pokemon cards, books, Japanese bath powder and a picture frame. Catherine was also the volunteer driver of this project. I must thank Miu, who helped the project by buying some gifts from Toronto; Crystal and Frankie, who helped the project by buying cards from Hong Kong.

Gifts for the children (project souvenirs, X'mas gifts, Easter gifts, birthday gifts or to highlight strengths):

	A	B	C	R	S	T	U	V (5 children)
Japanese hot spring bath powder (package)	1	2	1			1	5	1
Pokemon cards (package)	1	1	1		1	1	1	1
Shiny Pokemon cards						1	1	7
Posters	1	2	1	1	1		2	3
Cute rulers	1	1	1					
Sticker sheets	2	1		1	2	1		5
Glass stickers					1			
Hair ties			3					
Cute files	1	1	1					3
Mirror & comb				1			1	
Diary		1	1				1	
Writing pads							1	
Soft toys	1	3			2	1	1	2
Books					2		1	3
Flower							1	
Camera(for kid)								1
Superman slippers								1
Handkerchief				2				
Pencil caps or pens	1	1				1		
Girl key holder				1				1

Gifts for the parents (Project souvenirs, birthday gifts or to highlight strengths):

	A	B	C	R	S	T	U	V
Cell phone holder (souvenir)	1	1						
Hong Kong First Day Cover (souvenir)				1	1	1	1	1
Glass stickers	1	1						
Flower								1
Handkerchief			1					
Family pictures					(5)		(2)	(16)
Hot spring bath powder						2		
Picture Frame								1
Writing pad							1	

The giving of gifts was inspired by the love I had experienced from my Christian faith and from the loving people who loved me and/or were around me. It first started when a friend sponsored the project with children books. In the process of preparing the resources, my sponsors and I experienced the joy of giving. After I had finished preparing all the resources for the whole project in December, 2001, I received two unexpected gifts for myself. I used them for visiting my mother's earthly home in Toronto.

Appendix E

Tentative Group Contents/Children's Group

Session 1

Program

Knowing each other.

Objectives

1. To acquaint group members with one another through the use of group activities.

2. To provide an opportunity for the group members to share their needs and their expectations towards the group.

Activities

1. Welcome speech.

2. Check-in activity.

3. Warm up games.
- Dyads "Knowing each other".
- "Knowing your name: You are important". (with mothers' participation)

4. Discussion : "Myths of child sexual abuse".

5. Discussion: Group rules and group expectations.

6. Letter activity.

7. Gift basket.

8. Check-out activity.

9. Snack time and sharing.

Session 2

Program

Impact of sexual abuse on children. (joined session)

Objectives

1. To discuss how the group members' experience of sexual abuse have affected their psychological, emotional, social, and behavioral aspects.

2. To enhance the mothers' understanding of what their children have been going through.

Activities

1. Welcome speech.

2. Check-in activity.

3. Warm-up activities.
- Communication activity.
- Dyads (mother and daughter): "How much do I know you?"

4. Discussed the impacts of child sexual abuse in the following aspects:
- Psychological aspect.
- Social aspect.
- Behavioral aspect.
- Emotional aspect.

5. Letter activity.

6. Gift basket.

7. Check-out activity.

8. Snack time and sharing.

Session 3

Program

Grief and resolution.

Objectives

1. To provide opportunities for group members to grieve if they have not done so before or if they need to do it again.

2. To discuss effective methods to help group members cope with the impact of sexual abuse.

3. To enhance group members' awareness of the importance of the present and future, and help them set goals to move forward.

Activities

1. Check-in activity.

2. Checked with the girls' coping in the week.

3. Discussed how child sexual abuse continue to affect the children.

4. Discussed new perspectives and ways of coping.

5. Role-play activity on coping.

6. Writing a letter to the offender.

7. An activity to set goals to move on.

8. Gift basket.

9. Group members were briefed on the next group theme: " Improving self-esteem".

10. Check-out activity.

11. Snack time and sharing.

Session 4

Program

Improving self-esteem.

Objectives

1. To enhance group members' self-image by identifying their strengths.

2. To discuss self-acceptance as a way to enhance one's self-esteem.

Activities

1. Check-in activity.

2. Discussed the girls' coping in the week.

3. Discussed the definition of self-esteem.

4. Warm up activities
- "You are special".
- " Things that I can accept myself and things that I can't accept myself".

5. Discussion on how self-acceptance could affect one's self-esteem.

6 . Letter activity.

7. Gift basket.

8. Group members were briefed on the next group theme: "Peers and I".

9. Home task: Group members were to think about some characteristics of their best friends.

10. Check-out activity.

11. Snack time and sharing.

Session 5

Program

Peers and I.

Objectives

1. To provide group members opportunities to share their views or experiences of friendships, positive or negative.

2. To discuss the CSA impacts on group members' friend-making.

3. To discuss ways to develop friendships by focusing on new perspectives, unique outcomes, strengths and new skills.

Activities

1. Check-in activity.

2. Follow up the hometask: Group members share who their best friends are.

3. Group members share their friend-making experience.
- Discuss the times when the group members have no or few friends and their coping.
- How does their abuse affect friend-making?
- How do they make friends? Any difficulties?

4 Discuss: why friendship is important, goal-setting in developing friendship and friend-making skills. A role-play is used to demonstrate friend-making skills.

5. Letter activity.

6. Gift basket.

7. Group members are briefed on the next group theme: "Discovering the family influences in childhood".

8. Home task: Group members are encouraged to ask their mothers to draw a family tree of three generations (the children, their parents and grandparents). Group members are to talk about their most favourite relative.

9. Check-out activity.

10. Snack time and sharing.

Session 6

Program

Discovering the family influences in childhood.

Objectives

1. To enhance group members' understanding of
- their family-of-origin.
- their strong ties and weak ties in the family tree.

2. To discuss unresolved issues, and to look at the strengths, resources and supports in the family.

3. To co-create new perspectives of a preferred family.

Activities

1. Check-in activity.

2. Follow up the home task: Group members talk about their most favourite relative.

3 Family-of-origin activity.
- Demonstrate how to draw a genogram as well as how to identify strong ties and weak ties.
- Dyads: Group members draw their genogram in pairs.
- Group members present their charts and discuss the unresolved issues (if there are any), the supportive as well as the non-supportive members, the strengths and the sources of support of their families.

4. Discussion: A desirable family for the present and future.

5. Letter activity.

6. Gift basket.

7. Group members are briefed on the next group theme: "How to establish healthy personal boundaries?"

8. Check-out activity.

9. Snack time and sharing.

Session 7

Program

How to establish healthy personal boundaries?

Objectives

1. To discuss boundaries issues within and outside the family.

2. To discuss why boundaries in the family cannot be violated.

3. To discuss assertive skills with group members.

Activities

1. Check-in activity.

2. Group members describe and give examples of a boundary.

3. A role-play activity is used to illustrate the meaning of a boundary.

4. Discuss why their boundaries cannot be violated.
- Draw two faces and discuss their feelings when and when not violated.
- Discuss: If violated, the impacts on their behaviour, their emotional-psychological state and their relationships with others.

5. To co-create new boundaries.
- To discuss their new boundaries and ways to protect them.

6. Letter activity.

7. Gift basket.

8. Group members are briefed on the next group theme: "Parent and I".

9. Home task: Group members are to think of one incident where they felt loved by their parents.

10. Check-out activity.

11. Snack time and sharing.

Session 8

Program

Parent and I (joined session)

Objectives

1. To enhance the group members' understanding of the role of communication in the parent-child relationship.

2. To discuss some communication skills with group members.

3. To enhance parent-child relationship by highlighting the love within the relationship.

Activities

1. Check-in activity.

2. Follow-up the home task: Children share one incident where they felt loved by their mother. The mothers share one incident where they felt loved by their child.

3. Warm up activities.
- Games: "One-way communication" and "Two-way communication" are used to demonstrate the importance of communication.

4. Discussion.
- Children's Group: Discuss the difficulties of talking to their mothers after the CSA disclosure.
- Parent's Group: Discuss the difficulties of talking to their children after their children's CSA disclosure.
- Facilitate two groups to communicate with each other that which they had discussed.

5. Discuss ways to improve parent-child communication. Examples are:
- Understand each other's needs after the disclosure.
- Understand each other's stress and coping.
- Do not deny the fact of abuse and by-pass problems.
- Be open to talk about how they feel, what they need or want to talk about, and how to move forward.

6. Discussion.
- Children's Group: Discuss parental love.
- Parent's Group: Discuss love from their children.
- Set goals to improve the parent-child relationship.

7. Letter activity.

8. Gift basket.

9. Both groups are briefed on their next group session theme. The theme for the Children's Group is "The Offender" and the theme for the Parent's Group is "How to establish healthy personal boundaries".

10. Home task: Both parent and child are to do one nice thing for each other this week.

11. Check-out activity.

12. Snack time and sharing.

Session 9

Program

The Offender.

Objectives

1. To help group members grieve over the betrayal of trust by the offender.

2. To enhance group members' understanding of the offender's responsibility in the abuse.

3. To develop a positive view towards healthy family relationships.

Activities

1. Check-in activity.

2. Follow up the home task: Group members share one nice thing they have done for their parents and one nice thing their parents have done for them.

3. Warm up activities
- Draw two faces to describe their feelings towards the abuser right after the abuse and at the present. Discuss their feelings.

4. Discuss the offender's responsibility in the abuse.

5. Game
- Use a stuffed toy animal to pretend it is the abuser, and group members say their "unfinished business" to their "abuser". Discuss their feelings.

6. Discuss healthy relationships within a family (worksheet).

7. Letter activity.

8. Gift basket.

9. Group members are briefed on the next group theme: "Personal safety and protection".

10. Home task: Group members are encouraged to do one thing that makes them feel good.

11. Check-out activity.

12. Snack time and sharing.

Session 10

Program

Personal safety and protection.

Objectives

1. To promote children's awareness of the importance of safety and protection from sexual abuse.

2. To discuss safety issues at home and outside home.

Activities

1. Check-in activity.

2. Follow up the home task: Group members share one thing they had made themselves feel good in the week.

3. Discuss situations where child sexual abuse may have happened:
- At home and outside home.
- Who can be the perpetrator? (e.g. family member, relatives, boyfriend, strangers.)
- Discuss ways to protect group members from such harm.

4. Role-play to demonstrate a safety plan and assertive skills.

5. Closing game: Discover each other's strengths.

6. Letter activity.

7. Gift basket.

8. The group members are briefed on the next group theme: " A positive view towards intimate relationships".

9. Home task: Group members are to think about if they can have a happy marriage and family in their future.

10. Check-out activity.

11. Snack time and sharing.

Session 11

Program

A positive view towards intimate relationships. (Examples: dating and marriage.)

Objectives

1. To discuss how the sexual abuse experience has affected group members' perception of intimate relationships (dating and marriage).

2. To develop a new perspective towards healthy relationships.

Activities

1. Check-in activity.

2. Follow up the home task: Group members share if they can have a happy marriage and family in their future.

3. Discuss the impacts of CSA on their ideas and feelings towards intimate relationships. Examples include:

- Fear.
- Insecure.
- Feeling dirty.
- Feeling undeserved of love.
- Being compliant to have unwanted sex or unreasonable demands.
- Accepting partner to have affairs.
- Having many boyfriends even when in a stable relationship.

4. Discuss what a healthy intimate relationship would be like. Examples for discussion include (worksheet):

- Have no abuse in the relationship.
- Self-acceptance (including the past abuse).
- Feeling secure and be able to trust.
- Have a boundary to be respected.
- Commitment.
- Keeping promises.
- Have responsibility.
- Care and love.
- Forgiveness.
- Feeling equal.
- Respect.

- Communication.
- Affirmation and assurance to build up each other's self-esteem.
- Help each other to grow.
- No unreasonable or weird demands.
- Not to develop intimate relationships at an inappropriate age.

5. Discuss coping methods of CSA symptoms that may occur in an intimate relationship.
- Flashbacks.
- Trust issues.
- Boundary issues.

6. Play a game (focus on the theme of self-acceptance).

7. Letter activity.

8. Gift basket.

9. Group members are briefed on the next group theme: "A brave new future".

10. Home task: Group members are to think about a dream that may come true.

11. Check-out activity.

12. Snack time and sharing.

Session 12

Program

A brave new future. (joined session)

Objectives

1. To help group members develop short-term and long-term goals.

2. To celebrate the completion of the group therapy.

Activities

1. Check-in activity.

2. Follow up the home-task: Group members share a happy dream of their future.

3. Discuss short-term and long-term goals.
   -Dyads: Mother and daughter complete their worksheets.
   -Sharing from dyads.

4. Review the overall learning in the group and introduce community resources.

5. Mother and daughter in dyads fill out the group evaluations and post-tests.

6. Letter activity.

7. Gift basket.

8. A game to close the group: For example, highlighting the strengths of each member.

9. Project awards a certificate as well as a souvenir to each group member to celebrate the completion of the group therapy.

10. Snack time and sharing.

Tentative Group Contents /Parent's Group

Session 1

Program

Knowing each other.

Objectives

1. To acquaint group members with one another.

1. To provide an opportunity for group members to share their needs and their expectations of the group.

Activities

1. Welcome speech.

2. Check-in activity.

3. Warm up activities.

- "Knowing each other".

- "Puzzle activity".
  Each dyad group has to dissolve the puzzle and find a solution to a problem described. Examples include: a CSA symptom of their child, parent's coping, parent-child relationship, or parenting.

4. Introduce group goals and contents to the group members and discuss individual goals.

5. Discuss group rules.

6. Discuss how their children's sexual abuse has affected their lives.
   - Share their successful as well as unsuccessful experiences in coping.

7. A game to close the group session.

8. Group members are briefed on the next group theme: "Impact of child sexual abuse on children". (joined session)

9. Check-out activity.

10. Snack time and sharing.

Session 3

Program

Parent's grief and resolution.

Objectives

1. To facilitate group members' grieving over their children's sexual abuse in a safe group environment.

2. To discuss group members' resolution towards their children's sexual abuse.

Activities

1. Check-in activity.

2. Discuss group members' feelings towards the abuse. Examples are:
   - Their anger, guilt in failing protecting their children.
   - The feeling of betrayal and the changes in the family.
   - How do they express their feelings?

3. A drawing activity: To express and discuss their feelings in coping.

4. Discuss ways of coping with their children's sexual abuse.

5. Discuss their resolutions about their children's sexual abuse.

6. A game: To highlight the strengths of each group member as a parent.

7. Group members are briefed on the next group theme: "Discovering family influences in childhood (1)".

8. Home task: Group members are to learn about their family-of-origin (themselves, their parents and their children), and share who were the most favourite relatives in their childhood.

9. Check-out activity.

10. Snack time, as well as discussing the children's progress in the group and at home.

Session 4

Program

Discovering family influences in childhood (1).

Objectives

1. To discuss the impacts of family-of-origin on group members' lives.

Activities

1. Check-in activity.

2. Follow up the home task: Group members share their most favourite relatives in their childhood.

3. Warm-up activity: To discuss the influences of a family-of-origin.
   (e.g. the similarities and differences between parents in their appearance, temper and ways of doing things.)

4. Drawing activity: Genogram

- Demonstrate how to draw a genogram and discuss:
  - Parents' relationship.
  - Who were the favourite/unfavourable children or relatives and why?
  - Any crisis in the family and the family's way of coping? Examples: divorce, death, bankruptcy.
  - Any unresolved issues?
  - How was their family-of-origin affecting their lives? Examples: their selection of mates, relationships, parenting, daily coping, and their perspectives on life.

5. Each group member draws and presents her genogram.

6. Group members are briefed on the next group theme: "Discovering family influences in childhood (II)".

7. Home task: Group members think about the strengths and sources of support in their family-of-origin.

8. Check-out activity.

9. Snack time, as well as discussing the children's progress in the group and at home.

Session 5

Program

Discovering family influences in childhood (II).

Objectives

1. To enhance group members' understanding of the family rules, interaction patterns, and boundary issues.

2. To explore if there are any family secrets in the family.

3. To explore the strengths and sources of support in each member's family-of-origin.

Activities

1. Check-in activity.

2. Follow up the home task: Each group member shares the strengths and sources of support of her family-of-origin.

3. Discuss family rules, interaction patterns and boundaries issues in each member's family-of-origin.
   - The family rules (the important ones; also the ones they liked and didn't like.)
   - The way of communication in the family (e.g. was it clear, direct, or indirect? With warmth or without warmth? how was anger expressed in the family? Was there often praise or criticism in the family?)
   - The boundary issues (e.g. were they rigid, clear or diffused in parenting?)

   - Discuss how the above may have affected her life, such as her parenting and her coping with her child's sexual abuse.

4. Drawing activity: A family secret of each family's family-of-origin.
   Group members can "pass".
   Each group member shares her family secret.

5. To develop a new perspective, group members discuss:

- What would each member like to change in her family-of-origin? And why? What will be the costs to make those changes? How will she do it? Any goals? Examples in:
  - Family rules.
  - Way of communication.
  - Boundary issues.
  - Mate selecting patterns.

6.Home task: group members think of one thing from their family-of-origin that may have affected their relationships with their previous partners.

7. Check-out activity

8.Snack time, as well as discussing the children's progress in the group and at home.

Session 6

Program

How to develop a healthy, intimate relationship?

Objectives

1. To discuss how one's family-of-origin, or a crisis in it, may have affected her relationship issues.

2. To discuss if group members' previous relationships have resulted in any unresolved issues.

3. To develop new perspectives towards healthy relationships.

Activities

1. Check-in activity.

2. Follow up the home task: Group members share one thing (e.g. their child sexual abuse, family violence) from their family-of-origin that may have affected their relationships with their previous partners.

3. Discuss if /how their family-of-origin has affected the following aspects:
   - Age of marriage/or living together.
   - Selection of a particular type of partner.
   - Ways of coping with the partner.
   - Tolerance towards any unfair treatment by their partners. (e.g. family violence, abuse, unreasonable demands.)

4. Discuss the unresolved issues caused by their previous relationships. Examples are:
   - Anger, feeling of betrayal, feeling insecure, difficult to trust, guilt, low self-esteem, boundaries issues.
   - Explore ways to solve these problems.

5. Discuss where and how to develop and maintain healthy relationships. Examples are:

   - Not jumping into any relationships without thinking carefully, or in an unsteady emotional state, or for escaping from pain, loneliness, etc.
   - How safe is it to date a man they met over the Internet?
   - Where to meet the right man?
   - Relationship is not only based on sex, but on love, commitment and responsibility.
   - No violence in the relationship.

- Affirmation and assurance from the partner to help improve self-esteem.
- Any common interests and common values? Any common goals?
- Any individual differences that are complementary to each one's weaknesses?
- Care and love.
- Keeping promises.
- Forgiveness.
- Respect.
- Communication.
- Feeling equal with the partner.
- Treasure one another.
- Respectful to one's boundary, including the child's.
- Not compliant to unreasonable demands.
- Be independent and develop a network of friends for support.

6. Group members are briefed on the next group's theme: "Improving self-esteem".

7. Home task: Think of one incident that they feel confident.

8. Check-out activity.

9. Snack time, as well as discussing the children's progress in the group and at home.

Session 7

Program

Improving self-esteem.

Objectives

1.To enhance group members' awareness when and how they have lost their self-esteem.

2.To discuss new perspectives to enhance self-esteem.

Activities

1. Check-in activity.

2. Follow-up the home task: Group members share one incident that they feel confident of themselves.

3. Warm up game: "Who am I?"
   Group members do the worksheets in dyads.
   Group sharing and discussion.

4. Discuss how previous relationships may have eroded their self-esteem.
- Examples: the use of isolation, threats, humiliation, being told you were incompetent, exhaustion.

5. Discuss ways to solve these problems.
   Examples are:

   - How do these problems affect you and how do you cope with them?
   - Are there fears about getting rid of these problems from your life?
   - What kind of life would you like to have in your future? (Scaling questions are used to understand where client is at and how much she wants to change.)
   - Externalize the problems.
   - Develop new perspectives to make the changes. (e.g. Look at the unique outcomes and previous successful actions to help prepare to reach your preferred goals.)

6. Worksheet activity: "Esteem tree" exercise.
   - The mothers discuss their strengths.

7. A game activity: "Strengths Circle".

- A group member sits inside a circle. (If there is a problem, the member may choose to remain in the circle. She can choose whether or not to participate in the game.)
- Every group member gives positive comments or encouragement to that member.
- At the end, the member in the circle names three of her strengths that she feels most proud of.
- Game ends when each member has gone through the same procedure.

8. Group members are briefed on the next group theme: " Parent and I".

9. Home task: Group members are encouraged to practise thinking one positive thing about themselves daily. As well, they are to think of one incident where they felt loved by their child.

10. Check-out activity.

11. Snack time, as well as discussing the children's progress in the group and at home.

Session 9

Program

How to establish healthy personal boundaries?

Objectives

1. To discuss ways to strengthen the mothers' boundaries.

2. To explore the impacts on children when their boundaries are violated by child sexual abuse, and ways to strengthen their boundaries.

Activities

1. Check-in activity.

2. Follow up the home task: Share one nice thing they have done for their children.

3. Discuss the boundary issues with reference to the genograms.

- To discuss the meaning of a boundary.
- To discuss if the family boundaries between the family sub-systems are clear, rigid or enmeshed.
- To explore how group members feel about growing up with these boundaries and their impacts on their lives. How they would like to change the boundaries in their childhood.

5. Discuss the significance of maintaining healthy boundaries. Examples:
   - Having more control over their own life.
   - Be more aware of their children's boundaries.
   - Be more assertive in telling their partners about the boundaries that cannot be violated.

6. Discuss the impacts on their children when their boundaries are violated, and ways to strengthen their boundaries with different people.
   (e.g. mother's (future) partners, relatives, children's peers, strangers.)

7. Group is briefed on the next group theme: "Parenting (1)".

8. Home task: Think about one parenting experience that they enjoy or do not enjoy.

9. Check-out activity.

10. Snack time, as well as discussing the children's progress in the group and at home.

Session 10

Program

Parenting (I).

Objectives

1. To enhance the mothers' awareness of the purpose of parenting and their responsibilities.

2. Discuss how different styles of parenting may lead to different types of children.

3. Discuss some effective methods of parenting.

4. Discuss ways to help mothers cope with their feelings when their children do not behave.

Activities

1. Check-in activity.

2. Follow up the home task: Group members share one parenting experience that they enjoy or do not enjoy.

3. Discuss the purpose of parenting and parental responsibilities.

4. Discuss different parenting styles and their impacts on children (flip chart).

   - Permissive-indulgent parents and impulsive-aggressive children in families with enmeshed boundaries.
   - Authoritarian parents and conflicted-irritable children in families with rigid boundaries.
   - Authoritative parents and energetic-friendly children in families with clear boundaries.

5. Discuss some effective methods of parenting (work sheet).

- What do children need? (e.g. love, supportive parents, friends)
- Do they need guidance?
  - Children's responsibilities.
  - Learning at school and at home.
  - Health issues. (e.g. the food they eat.)
  - Peer relationships.
  - Self-care. (e.g. tidiness.)
- Role modelling

6. Discuss how to cope with unhappy feelings when children do not behave?
7. Group is briefed on the next group theme: "Parenting (II)".
8. Home task: Give guidance to their children in one area of their life.
9. Check-out activity.
11. Snack time, as well as discussing the children's progress in the group and at home.

Session 11

Program

Parenting II: (tentative topic) How to help children cope with their stress?

Objectives

1. To discuss ways to cope with stress arising from parenting and daily life issues.

2. To discuss methods to help their children cope with stress.

Activities

1. Check-in activity.

2. Home task: Group members share an incident when they have given guidance to their children.

3. Discuss the meaning of stress.
- Stress may mean: a stressor, a response to stress, or a mismatch between one's coping ability and the demands of one's environment.

4. Discuss the stress arising from parenting.
   Examples:
   - Their children are acquainted with undesirable peers.
   - Unreasonable expectations of their children.
   - Their children become rebellious.
   - Their children do not relate well to their mother and/or her boyfriend.

5. Discuss: Source of stress, symptoms of stress, and methods to solve the problems (Either have entire group discussion or break into small groups where findings will be summarised to the entire group.)

   Examples:
   Source of stress
   - Parenting.
   - Worrying too much.
   - Feeling of inferiority.
   - Can't let go.
   - Suppress one's feelings.
   - Personality. (e.g. being competitive, having over-expectation, doing too many things at one time.)
   - Too tired.
   - Lack of social and/or emotional support.
   - Lack of excitement.

- Crises.
- Poor diet.
- Competitiveness.

Symptoms of stress
- Over-excited.
- Worried.
- Forgetful.
- Insomnia.
- Loss of appetite.
- Headache.
- Vomiting.
- Stomach-ache.
- Tense muscle.
- Sweating.
- Feeling tired.
- High blood pressure.

Solutions
- Understand what the stressor is.
- Face the problem and solve it. (e.g. learn parenting skills.)
- Take good care of oneself: do exercise; relax, practise deep breathing; get enough sleep; maintain a good diet; talk to friends and get help from professionals.
- Have good time-management.
- Do one thing at one time.
- Learn skills to deal with unhappy emotions.

- Group members can use the same information to help their children to cope with stress.

6. Discuss examples when their children feel stressed and ways to help them.
   Examples:
   - Have no friends or are lonely.
   - Have a secret of sexual abuse.
   - Do not do well in school or are not popular.
   - Do not get along with their mother's boyfriend.

7. A game about praise or affirming mothers' parenting ability is used to close the group.

8. Group is briefed on the next group theme: "A brave new future".

9. Check-out activity.

10. Snack time, as well as discussing the children's progress in the group and at home.

Appendix F

CHILDREN'S CONSENT FORM

I agree to participate in the project, "A parallel group treatment approach for sexually abused children and their caregivers", which has been reviewed and approved by the University of Manitoba Joint-Faculty Research Ethics Board and the Elizabeth Hill Counseling Centre. This project includes individual, dyadic, family, and group therapies.

I understand that the group facilitator conducts this project to fulfill her Master of Social Work degree requirements. I also understand that the purpose of this project is to enhance the parent's ability to help the child cope with her CSA trauma, their psycho-social functioning, and the parent-child relationship.

I agree to complete the questionnaires about my emotional health and social support. I will also complete the weekly logs and a questionnaire for evaluating the service. I understand that treatment sessions may be videotaped for the group facilitator's skill development. As well, I am aware that only the group facilitator and her advisors will review the tapes, and read the weekly logs, questionnaires and notes.

I understand that all the research information will be kept in a secure place and only the group facilitator and her advisors will have access to it. All the research information will be destroyed when the group facilitator has completed her Masters degree requirements.

I understand that the clinical information about the child client may be released to a caseworker only if the child client is informed, and if the group facilitator has gained an approval from her advisors. I am aware that any new disclosures of abuse will be referred to an appropriate agency for the child's protection.

I understand that the group facilitator's learning from this project will be written in a practicum report. I give the group facilitator permission to make use of any information collected during the therapy in a non-identifying manner in her practicum report.

I am aware that participation in this project is voluntary. I can withdraw from this project at any time without penalty or consequence.

A Letter to Hope (Family B)

CUTE **WHITE**

She's as white and pure as snow.
She wants us all to know that friendship is forever.

Dear Hope,

Hi, how are you?

I just want to show appreciation for your participation in my project. You always gave good opinions and you expressed your feelings very well. You were supportive to other girls and were kind to them. You were very helpful.

I am proud of you that you have learned to express your feelings and understood the things we have discussed.

Keep on learning!

Take care.

Monita

Dec 8. 2001

WHITE & ORANGE STORY

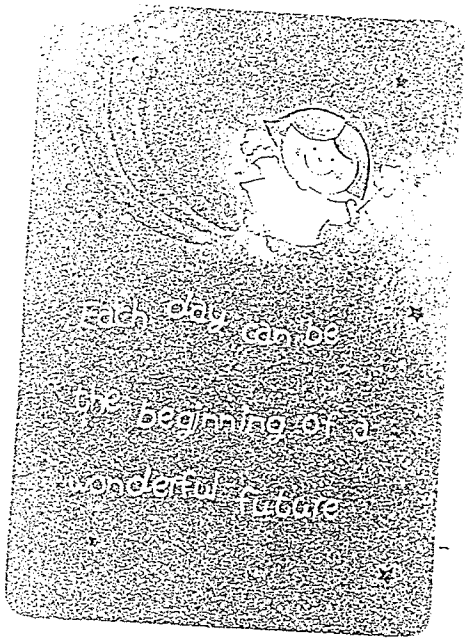

Dear Hope,

We love you just as you are.

Dec 8, 2001

4893 4695

A Letter to Kitty (Family C)

Lovely White Love is a bond A way to keep people together

Dear Kitty,

Hi, how are you?

Christmas is coming. Our group has some special gifts for you, because you are always part of our prays, and you are our friend.

The notebook can be used as a diary, a letter pad or anything to write about your feelings. The notebook has a lot of big-eyes girls. Other gifts are very beautiful too.

We miss you and wish you have a very happy X'mas.

Take care.

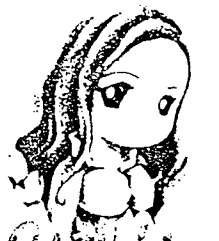

White

WHITE ORANGE STORY

Dec 5, 2001

One thing I am good at …

Session 7 **Family V: Kerri's Strengths Exercise**

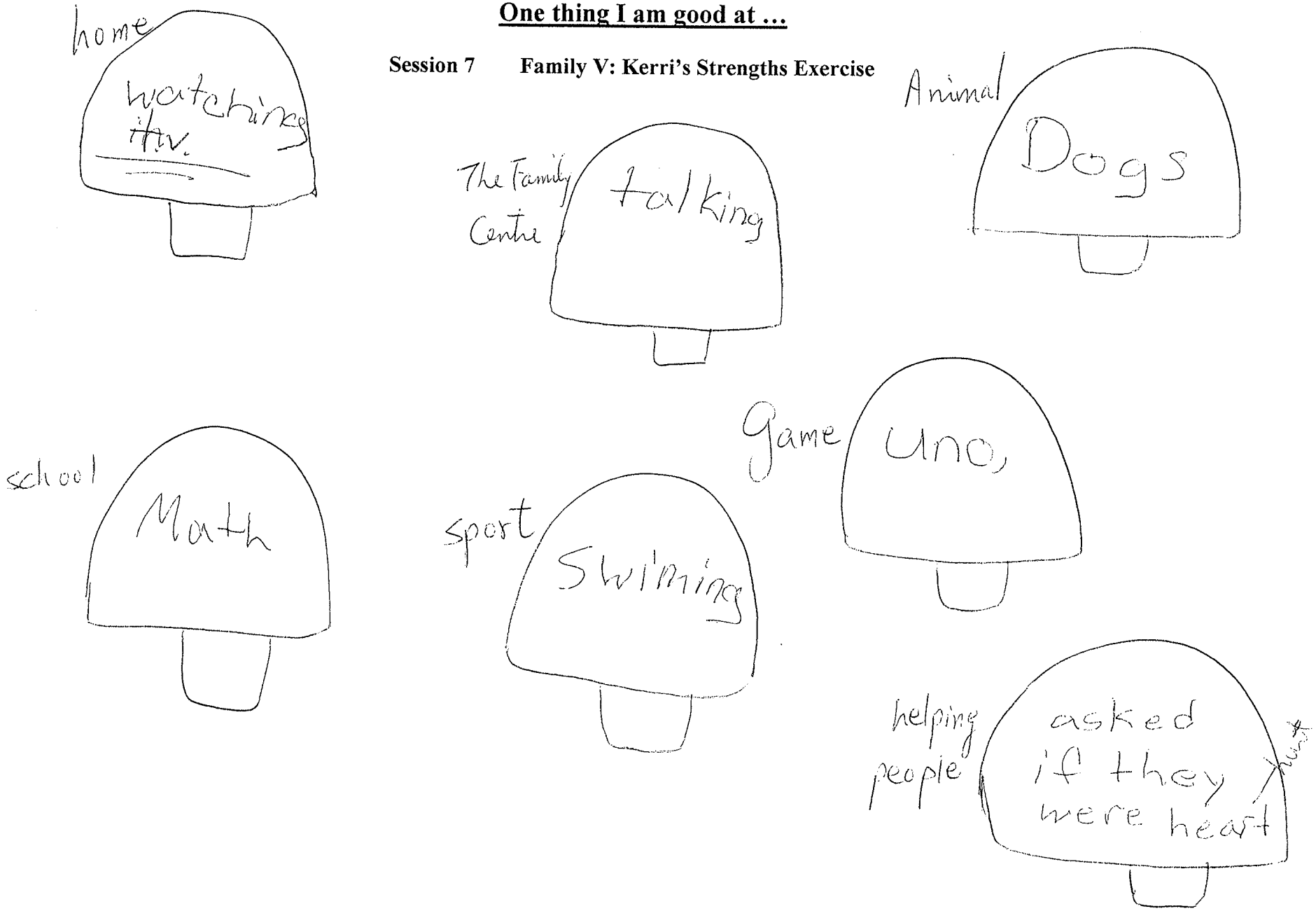

Certificate of Achievement

for overcoming "Scary" and its impacts

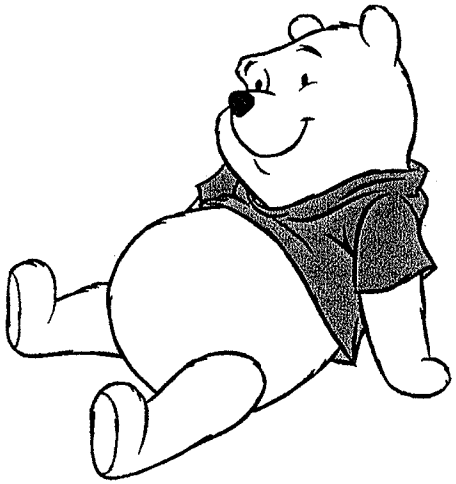

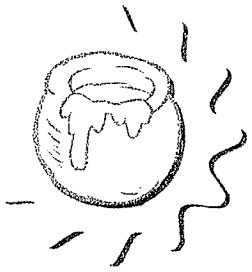

Presented To:

The U Family

Awarded by _____ Date _____

(C)Disney

Appendix G

Parent's Consent Form

I agree to participate in the project, "A parallel group treatment approach for sexually abused children and their caregivers", which has been reviewed and approved by the University of Manitoba Joint-Faculty Research Ethics Board and the Elizabeth Hill Counseling Centre. This project includes individual, dyadic, family, and group therapies.

I understand that the group facilitator conducts this project to fulfill her Master of Social Work degree requirements. I also understand that the purpose of this project is to enhance the parent's ability to help the child cope with her CSA trauma, their psycho-social functioning, and the parent-child relationship.

I agree to complete the questionnaires about my emotional health and social support. I will also complete a questionnaire for evaluating the service. I understand that treatment sessions may be videotaped for the group facilitator's skill development. As well, I am aware that only the group facilitator and her advisors will review the tapes, and read the weekly logs, questionnaires and notes.

I understand that all the research information will be kept in a secure place and only the group facilitator and her advisors will have access to it. All the research information will be destroyed when the group facilitator has completed her Masters degree requirements.

I understand that the group facilitator's learning from this project will be written in a practicum report. I give the group facilitator permission to make use of any information collected during the therapy in a non-identifying manner in her practicum report.

I am aware that participation in this project is voluntary. I can withdraw from this project at any time without penalty or consequence.

Finally, if I have any questions or concerns, I can contact the group facilitator or her committee supervisor, a program manager at the Elizabeth Hill Counseling Centre at 956-6560. As well, I can contact the Human Ethics Secretariat at 474-7122 if there are any complaints regarding a procedure.

Signature : _____ Date: _____

Appendix H

Authorization for release of information

I hereby authorize Monita Chan the permission to access my records from the agency stated below. The information released will be used to facilitate the therapeutic treatment process. This information is protected by the guidelines of confidentiality set out in agency policies.

I also authorize that clinical information about me may be released to my parent (caregiver) to facilitate my rehabilitation process, and/or to my referral worker for follow up purposes after my treatment is completed at the Elizabeth Hill Counseling Centre. However, clinical information can be released to the caseworker only when I am informed and after the group facilitator has consulted and obtained an approval from her practicum advisor.

Client : _____ Witness : _____

Date : _____

Contact staff : _____

Agency : _____

Telephone : _____

Address : _____

Appendix I

Rosenberg, M. (1979)

ROSENBERG SELF-ESTEEM SCALE (RSE)

Name: _____ Date : _____

Please write the number that best describes how you see yourself on the line beside each item. There are no right or wrong answers. It depends on whether you strongly agree, agree, disagree, or strongly disagree with it.

1 = Strongly agree
2 = Agree
3 = Disagree
4 = Strongly disagree

1. _____On the whole, I am satisfied with myself.
2. _____At times I think I am no good at all.
3. _____I feel that I have a number of good qualities.
4. _____I am able to do things as well as most other people.
5. _____I feel I do not have much to be proud of.
6. _____I certainly feel useless at times.
7. _____I feel that I'm a person of worth.
8. _____I wish I could have more respect for myself.
9. _____All in all, I am inclined to think that I am a failure.
10. _____I take a positive attitude toward myself.

Birleson, P. (1981)

DEPRESSION SELF-RATING SCALE (DSRS)

Name: _____ Date: _____

Please answer as honestly as you can by writing the number that best describes how you have felt over the past week on the line beside each item. There are no right or wrong answers. It is important to say how you have felt.

1 = Most of the time
2 = Sometimes
3 = Never

1. ____I look forward to things as much as I used to.
2. ____I sleep very well.
3. ____I feel like crying.
4. ____I like to go out to play.
5. ____I feel like running away.
6. ____I get tummy aches.
7. ____I have lots of energy.
8. ____I enjoy my food.
9. ____I can stick up for myself.
10. ____I think life isn't worth living.
11. ____I am good at things I do.
12. ____I enjoy the things I do as much as I used to.
13. ____I like talking about my family.
14. ____I have horrible dreams.
15. ____I feel very lonely.
16. ____I am easily cheered up.
17. ____I feel so sad I can hardly stand it.
18. ____I feel very bored.

Horowitz, M. J. (1979)

IMPACT OF EVENTS SCALE (IES)

Name: _____ Date: _____

Below is a list of comments made by people after stressful life events. Read each item and decide how frequently each item was true for you during the past seven (7) days. If the item did not occur to you during the past seven days, choose the "Not at all" option. Please write the number that best describes the item on the line.

1 = Not at all
2 = Rarely
3 = Sometimes
4 = Often

1. _____I thought about it when I didn't mean to.

2. _____I avoided letting myself get upset when I thought about it or was reminded of it.
3. _____I tried to remove it from memory.

4. _____I had trouble falling asleep or staying asleep, because of pictures or thoughts about it that came into my mind.
5. _____I had waves of strong feelings about it.
6. _____I had dreams about it.
7. _____I stayed away from reminders of it.
8. _____I felt as if it hadn't happened or it wasn't real.
9. _____I tried not to talk about it.
10. _____Pictures about it popped into my mind.
11. _____Other things kept making me think about it.
12. _____I was aware that I still had a lot of feelings about it, but I didn't deal with them.
13. _____I tried not to think about it.
14. _____Any reminder brought back feelings about it.
15. _____My feelings about it were kind of numb.

Hudson, W. W. (1982)

INDEX OF SELF-ESTEEM (ISE)

Name: _____ Date:_____

This questionnaire is designed to measure how you see yourself. It is not a test, so there are no right or wrong answers. Please answer each item as carefully and accurately as you can by placing a number on the line at the end of each item.

1 = Very rarely or none of the time
2 = A little of the time
3 = Some of the time
4 = A good part of the time
5 = Most or all of the time

1. I feel that people would not like me if they really knew me well. _____
2. I feel that others get along much better than I do. _____
3. I feel that I am a beautiful person. _____
4. When I am with others I feel they are glad I am with them. _____
5. I feel that people really like to talk with me. _____
6. I feel that I am a very competent person. _____
7. I think I make a good impression on others. _____
8. I feel that I need more self-confidence. _____
9. When I am with strangers I am very nervous. _____
10. I think that I am a dull person. _____
11. I feel ugly. _____
12. I feel that others have more fun than I do. _____
13. I feel that I bore people. _____
14. I think my friends find me interesting. _____
15. I think I have a good sense of humor. _____
16. I feel very self-conscious when I am with strangers. _____
17. I feel that if I could be more like other people I would have it made. _____
18. I feel that people have a good time when they are with me. _____
19. I feel like a walflower when I go out. _____
20. I feel I get pushed around more than others. _____
21. I think I am a rather nice person. _____
22. I feel that people really like me very much. _____
23. I feel that I am a likeable person. _____
24. I am afraid I will appear foolish to others. _____
25. My friends think very highly of me. _____

Beck, A. (1978)

BECK DEPRESSION INVENTORY

Name: _____ Date: _____

This questionnaire consists of 21 groups of statements. Please read each group of statements carefully. Then circle the number (0, 1, 2, or 3) next to the one statement in each group that best describes the way you have been feeling **the past week, including today**. If several statements within a group seem to apply equally well, circle each one.

Be sure to read all the statements in each group before making your choice.

1) 3 I am so sad or unhappy that I can't stand it.
   2 I am sad all the time and I can't snap out of it.
   1 I feel sad.
   0 I do not feel sad.

2) 3 I feel that the future is hopeless and that things cannot improve.
   2 I feel I have nothing to look forward to.
   1 I feel discouraged about the future.
   0 I am not particularly discouraged about the future.

3) 3 I feel I am a complete failure as a person.
   2 As I look back on my life, all I can see is a lot of failures.
   1 I feel I have failed more than the average person.
   0 I do not feel like a failure.

4) 3 I am dissatisfied or bored with everything.
   2 I don't get real satisfaction out of anything anymore.
   1 I don't enjoy things the way I used to.
   0 I get as much satisfaction out of things as I used to.

5) 3 I feel guilty all of the time.
   2 I feel quite guilty most of the time.
   1 I feel guilty a good part of the time.
   0 I don't feel particularly guilty.

6) 3 I feel I am being punished.
   2 I expect to be punished.
   1 I feel I may be punished.
   0 I don't feel I am being punished.

7) 3 I hate myself.
2 I am disgusted with myself.
1 I am disappointed in myself.
0 I don't feel disappointed in myself.

8) 3 I blame myself for everything bad that happens.
2 I blame myself all the time for my faults.
1 I am critical of myself for my weaknesses or mistakes.
0 I don't feel I am any worse than anybody else.

9) 3 I would kill myself if I had the chance.
2 I would like to kill myself.
1 I have thoughts of killing myself, but I would not carry them out.
0 I don't have any thoughts of killing myself.

10) 3 I used to be able to cry, but now I can't cry even though I want to.
2 I cry all the time now.
1 I cry more now than I used to.
0 I don't cry any more than usual.

11) 3 I don't get irritated at all by the things that used to irritate me.
2 I feel irritated all the time now.
1 I get annoyed or irritated more easily than I used to.
0 I am no more irritated now than I ever am.

12) 3 I have lost all of my interest in other people.
2 I have lost most of my interest in other people.
1 I am less interested in other people than I used to be.
0 I have not lost interest in other people.

13) 3 I can't make decisions at all anymore.
2 I have greater difficulty in making decisions than before.
1 I put off making decisions more than I used to.
0 I make decisions about as well as I ever could.

14) 3 I believe that I look ugly.
2 I feel that there are permanent changes in my appearance that make me look unattractive.
1 I am worried that I am looking old or unattractive.
0 I don't feel I look any worse than I used to.

15) 3 I can't do any work at all.
2 I have to push myself very hard to do anything.
1 It takes an extra effort to get started at doing something.
0 I can work as well as before.

16) 3 I wake up several hours earlier than I used to and cannot get back to sleep.
2 I wake up 1-2 hours earlier than usual and find it hard to get back to sleep.
1 I don't sleep as well as I used to.
0 I can sleep as well as usual.

17) 3 I am too tired to do anything.
2 I get tired from doing almost anything.
1 I get tired more easily than I used to.
0 I don't get tired than usual.

18) 3 I have no appetite at all anymore.
2 My appetite is much worse now.
1 My appetite is not as good as it used to be.
0 My appetite is no worse than usual.

19) 3 I have lost more than 15 pounds.
2 I have lost more than 10 pounds.
1 I have lost more than 5 pounds.
0 I haven't lost much weight, if any, lately.

I am purposely trying to lose weight by eating less. Yes_____ No _____

20) 3 I am so worried about my physical problems that I cannot think about anything else.
2 I am very worried about physical problems and it's hard to think of much else.
1 I am worried about physical problems such as aches and pains; or upset stomach; or constipation.
0 I am no more worried about my health than usual.

21) 3 I have lost interest in sex completely.
2 I am much less interested in sex now.
1 I am less interested in sex than I used to be.
0 I have not noticed any recent change in my interest in sex.

Appendix J

Client Satisfaction Questionnaire

Your comments on the therapy you received at the EHCC or the Family Centre is very valuable to us. It will help us provide better service for our future clients.

Please answer the questions and circle the answer that best describes your opinion.

1. What was your purpose of joining this treatment program?

   _____

2. Did you find your needs were met in the therapy sessions?

   a) Very often b) Frequently c) Sometimes d) Rarely

3. Have the therapy you received helped you to deal more effectively with your problem?

   a) A great deal b) Somewhat c) Not much d) Not at all

4. What has changed in you or in your family since you received therapy?

   _____

5. What did you like best about the group?

   _____

6. What did you like least about the group?

   _____

5. Would you recommend our program to your friends if they were in need of similar help?

   a) Yes, definitely b) Yes, I think so c) No, I don't think so d) No, definitely not

6. Any other comments or suggestions?

   _____

Additional comments

1. In this project, we have given various gifts to children to highlight their strengths, to award their positive behavior as well as to encourage their participation. Gifts were also given out on special days, like X'mas, Easter and birthdays. How do you feel about these gifts and if they are helpful in the therapy sessions with children?

(Children)

a) A great deal b) somewhat c) Not much d) Not at all

2. Would you recommend the use of gifts for children in future children programs?

a) Yes, definitely because _____
b) Yes, I think so because _____
c) No, I don't think so because _____
d) No, definitely not because _____

No 0 _____ 50 _____ 100 yes

3. How do you feel if parents also get little gifts or souvenirs for their birthdays and for their participation in therapy with their children?

a) Excellent because _____
b) Very good because _____
c) Good because _____
d) Not need to because _____

4. Do you suggest that we should do the same for parents in future projects?

a) Yes, definitely b) Yes, I think so c) No, I don't think so d) There is no such need

5. This project has provided children who attended therapy with snacks and drinks, as well as hot meals to a family who had such a need.
Do you think such provisions can be helpful to the families?

a) A great deal b) some what c) Not much d) Not at all

Explain _____

6. Do you suggest we continue to provide the drinks, snacks, and /or even hot meals (if there were such needs) for future projects?

a) Yes, definitely b) Yes, I think so c) No, I don't think so d) No, definitely not

7. How would you rate this project overall?

0 _____ 50 _____ 100

8. Could you please share with us your special thoughts and/or feelings about spending time with your family in the therapy sessions? Thank you.

Appendix K

Weekly Log

Name : _____

Date : _____

Topic of the week : _____

1. What do you like best about the group?

2. What do you like least about the group?

3. How do you feel about the interaction in the group?

4. What is your comfort level in the group? (1 is the lowest and 10 is the highest on a scale.)

_____

0 5 10

Appendix L

"Externalizing the problem"

Family	Metaphor	Problem
A Hope	Black	Child sexual abuse
B Janice	Scary	
C Kitty	Black 1	
I Terri	(not discussed)	
J Stella	Disgusting	
K Candy	Horror	

Family	Metaphor	Problem
R Carol	Lion	Sibling rivalry
S Gordon	Loss	Separation with ex-partner
T Marie	Snake	Jealousy
U Fern	Scary	Family violence
Alex	Lonely	Child sexual abuse
V Melanie	Stressful	Separation with ex-husband
Kerri	Pig	Jealousy

Appendix M

Narrative letter to Family R

April 23, 02

Dear Ellen,

Thank you for your family's participation in my project. Being a single-mother, working full time and having a busy schedule of taking care of two young children in a new city, you have tried your very best to come with Carol to attend some of the therapy sessions.

Since Carol has completed her therapy, I would like to summarize what has been discussed in the therapy.

There were a total of six therapy sessions. Among those sessions, your in-laws attended one therapy session, and they brought Carol to our Centre for two therapy sessions. In addition, I made one home visit to your family, your in-laws and your granny to understand the interaction patterns at home as well as how the home environment might have an impact on the children.

In the first therapy session, we developed new perspectives that the ways your grandmother and your mother had been parenting Carol might have caused your parenting difficulties. There were no rules in their families for Carol. Consequently, Carol became out of control and did not listen to you. We also discussed about some anger management skills in parenting. Carol and I talked and I learned a little bit about her and had developed a rapport with her.

In the second session, we discussed the strengths and supports of your family-of-origin. I normalized the family' struggles and highlighted your strengths as a parent. As well, Carol and I talked about her adjustments at her new school.

In session three, your in-laws and I discussed the sibling rivalry problems at her home. It gave me a fuller picture about what Carol needed in the therapy.

In session four, Carol learned how to use feeling words and scales to express her feelings about her relationships with other family members. We developed new perspectives about how to be a good sister and discussed ways to protect Carol from bullying by her younger sister.

In session five, you and I discussed stress management and the use of a social network to enhance parenting. We also talked about Carol's developmental tasks and her developmental needs, as well as the rules and roles in the family. With Carol, we talked about her experiences with other family members, both negative and positive at home, and I highlighted the positive experiences. Carol and I also talked about the rules and her roles in the family and how she felt about her roles and the family rules. In our

discussion, Carol demonstrated herself as a very sensitive girl who cares about the feelings of other family members.

In session six, your in-laws shared with us that Carol had improved in her sibling relationship. With Carol, she and I learned some feeling words together, and I highlighted her improvements at home and at your in-laws' home. Carol and I externalized "jealousy" by re-naming it the "Lion". Carol also claimed that the "Lion" no longer bothered her at your in-laws' home. Sometimes, she still felt that the "Lion" was attacking her at her home. However, this feeling had decreased and was not as strong as before. She knows that letting the "Lion" to control her is not right because she loves her sister.

We discussed the impacts of the "Lion" on her relationship with her sister and her mother, and found out some methods to overcome the "Lion". We also discussed ways to cope with dilemmas and relapses in case the "Lion" might come back. Finally, I prepared Carol for the closure of the therapy. A certificate of achievement as well as some special gifts from this project were awarded to her for her outstanding participation in the therapy and for overcoming the "Lion". At the end of the therapy, Carol said good-bye to the playroom. She asked me if she could come back. I told her that she was always welcome to come back if there were such need. Carol smiled and looked satisfied with such arrangement.

To conclude, I would like to show my admiration again to the unity manifested by your family and your in-laws' family for trying to bring Carol to our Centre. I understand that it is not an easy task to parent two girls. Nevertheless, you have demonstrated the love and perseverance of a good mother in your support to Carol's therapy.

Best Wishes!

Yours truly,

Monita Chan

Appendix N

Family U's letters

In a separate letter, both parent and child shared what they had experienced in these seven sessions of therapy.

From Alex

I have learned that my daughter needs more counseling to overcome her experience and upbringing with her mom and her mom's boyfriend. I believe it will take her years to overcome her insecurity and lack of self-confidence.

During therapy I revisited my past sexual abuse in my teens, which I was amazed that some of my feelings and images were fresh in my mind. I accept the fact that it will always be a part of my life and I will not let it control my life.

What I like best was the reassurance from Monita Chan that I was doing proper parenting techniques. Ms. Chan showing a sincere concern for Fern and phoning to see how we were doing. What I like least was Fern being rude and disrespectful in some of the sessions.

I feel therapy over the years can help one gain more confidence and strength to do much in life.

Thanks
Alex and Fern

From Fern

I learn the fighting is not the thing to solve. If any body says some thing mean ignore or tell the teacher. Don't get in to fight. If you get in to fight with my dad or mom just walk away. I learn about my dad's family.

I learn about cancer. I learn that people go throw this stuff. How much guys touch girls. I learn that people are kind and my dad's girlfriend and her daughter.

I like everything.

The first time I went I was scared but I got used to it. I didn't like to talk about my mom.

Appendix O

Therapy goals of Fern and Kerri

Family U: Fern's therapy goals

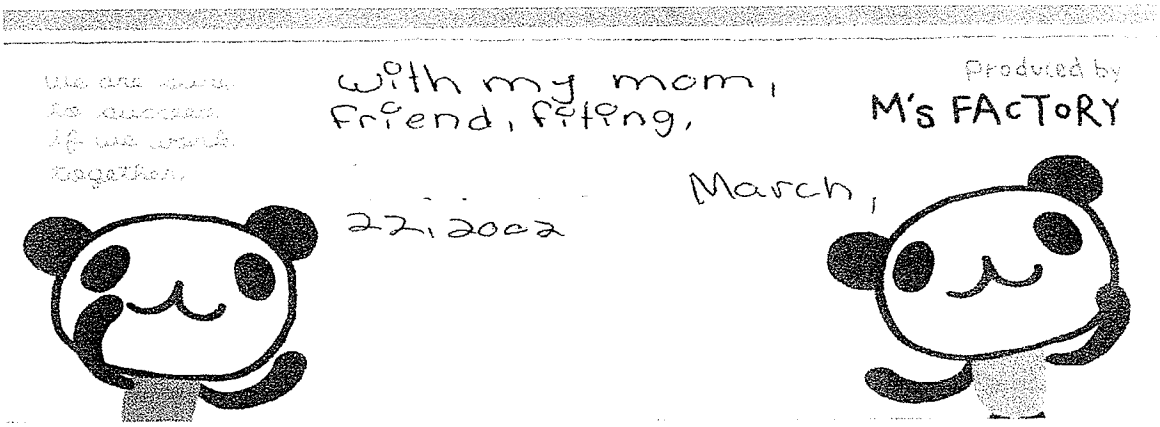

Family V: Kerri's therapy goals

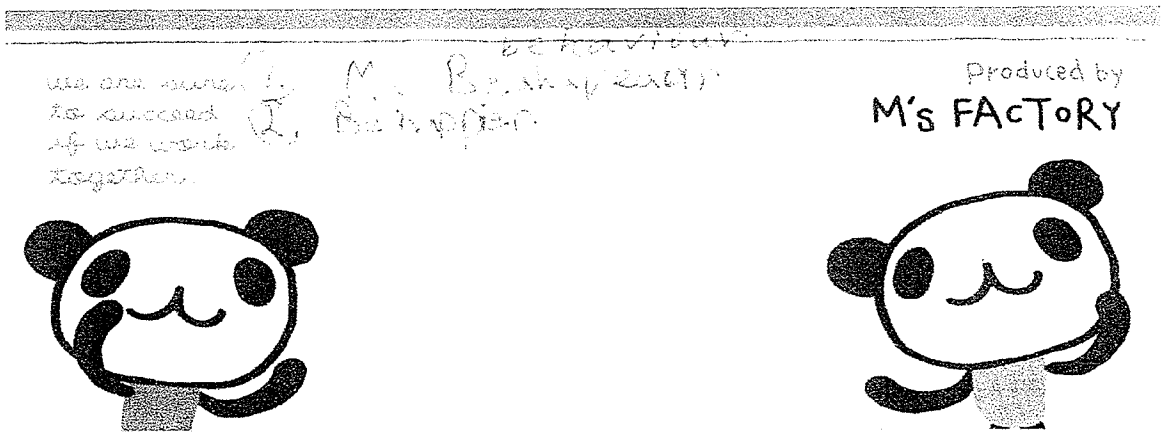

Appendix P

Cards, letters, certificates, posters

For parents: A card that emphasises a narrative perspective.

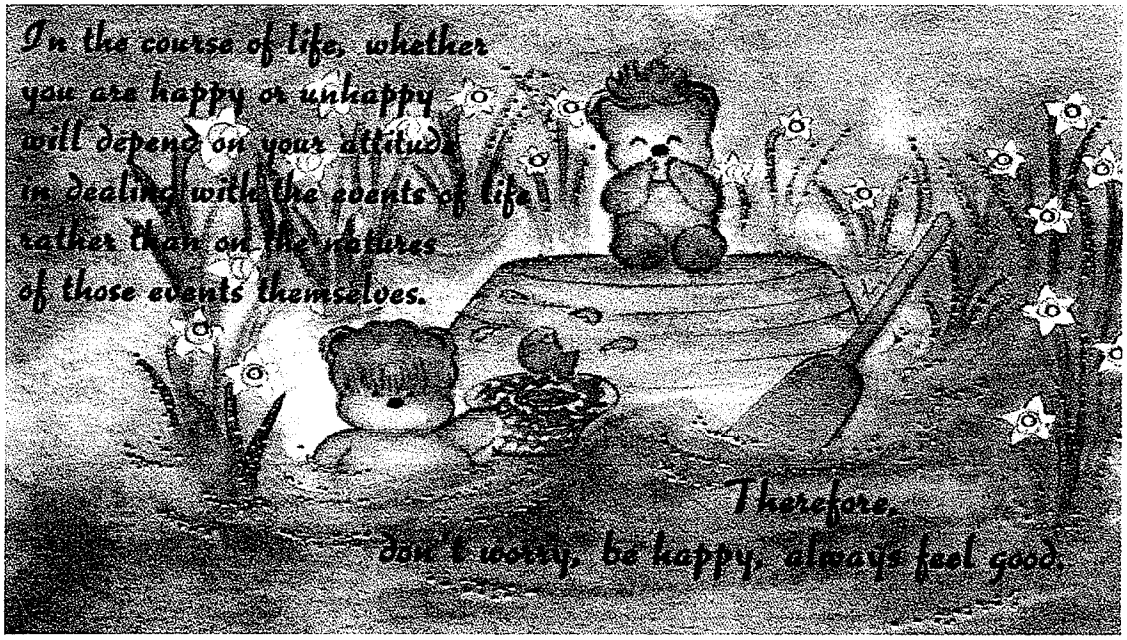

For children: A card that emphasises a positive outlook.

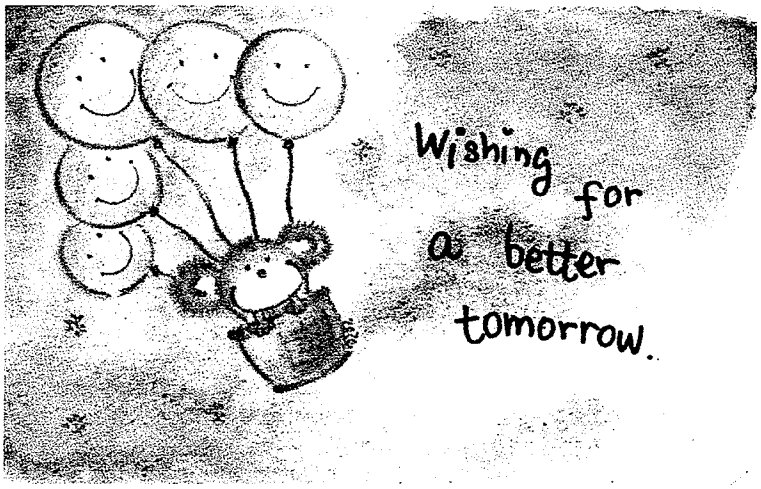

Finally, if I have any questions or concerns, I can contact the group facilitator or her committee supervisor, a program manager at the Elizabeth Hill Counseling Centre at 956-6560. As well, I can contact the Human Ethics Secretariat at 474-7122 if there are any complaints regarding a procedure.

Client : _____ Date: _____

Witness: _____ Date: _____

UNIVERSITY OF MANITOBA | PARENT'S SUPPORT GROUP

Why is the role of the parent important?

Do you agree with the following reasons?

To understand your child's psycho-emotional development

To guide your child with effective parenting skills

Through a series of activities, our support group can

enhance your understanding of your child

increase your parenting skills

and improve the parent-child relationship

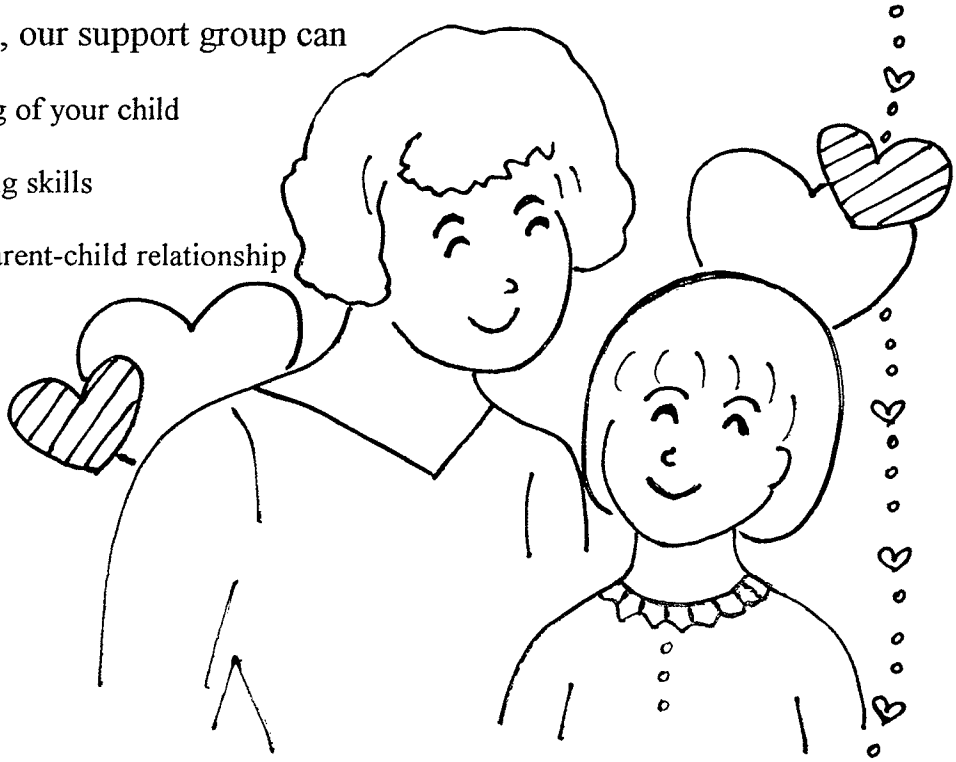

Group activities	: Sharing, discussion, role playing, games
Start Dates	: Early May, 2001 (Individual and/or Family Therapy) September 26, 2001, Wednesday (Group)
Time	: 6:30p.m. to 8:00p.m. (Group)
Group members	: Maternal parent or care-provider
Member	: 8
Fee	: Free
Place	: Elizabeth Hill Counseling Centre 301-321 McDermot Ave

Light refreshments will be provided at the end of each meeting
For more information, please contact Monita Chan at 956-6560

UNIVERSITY of MANITOBA

PARALLEL GROUPS FOR GIRLS WHO HAVE EXPERIENCED CHILD SEXUAL ABUSE AND THEIR CAREGIVERS

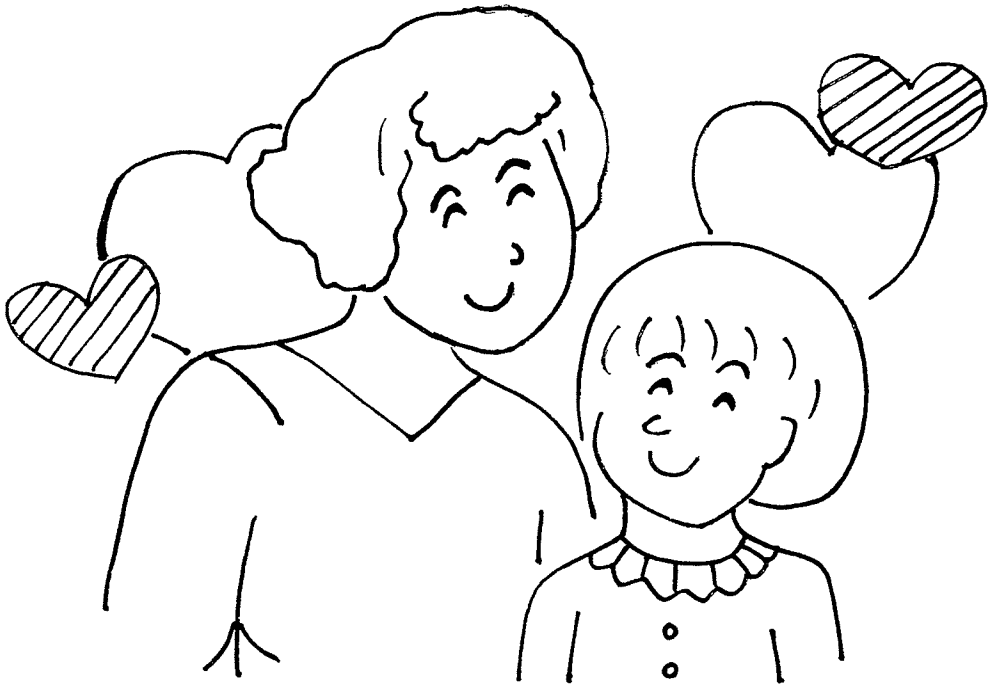

You are welcome to join our support groups!

Group activities	: Sharing, discussion, role playing, games
Start Dates	: Early May, 2001 (Individual and/or Family Therapy) September 25, 2001, Tuesday (Children's Group) September 26, 2001, Wednesday (Parent's Group)
Time	: 6:30p.m. to 8:00p.m. (Children's/Parent's Group)
Group members	: Girls who are 11 to 13 years old Maternal parent or care-provider
Members	: 8 (each group)
Fee	: Free
Place	: Elizabeth Hill Counseling Centre , 301-321 McDermot Avenue

Light refreshments will be provided at the end of each meeting
For more information, please contact Monita Chan at 956-6560

UNIVERSITY OF MANITOBA | CHILDREN'S SUPPORT GROUP

Do you want to know more about:

The impact of child sexual abuse?

Who is responsible for sexual abuse?

Safety plans?

New perspectives?

Problem solving skills?

How to have a new beginning?

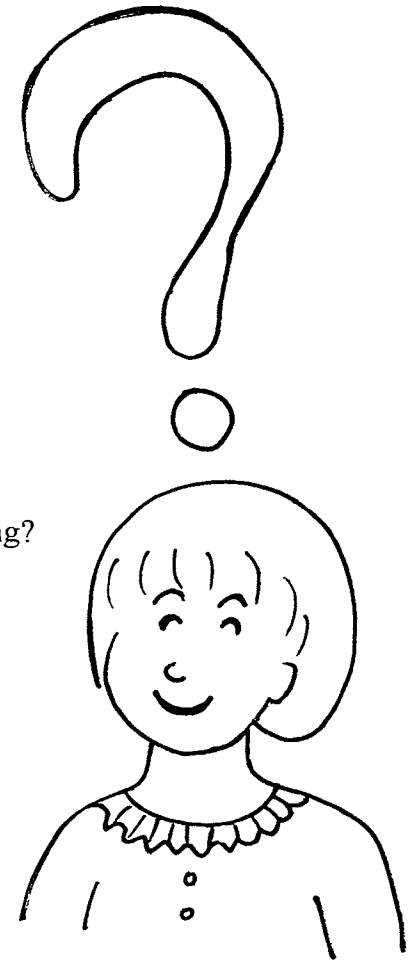

You are welcome to join our support group!

Group activities	: Sharing, discussion, role playing, games
Start Dates	: Early May, 2001 (Individual and /or Family Therapy) September 25, 2001, Tuesday (Group)
Time	: 6:30p.m. to 8:00p.m.(Group)
Group members	: Girls who are 11 to 13 years old
Members	: 8
Fee	: Free
Place	: Elizabeth Hill Counseling Centre, 301-321 McDermot Avenue

Light refreshments will be provided at the end of each meeting
For more information, please contact Monita Chan at 956-6560