COUNTERTERRORISM IN GREAT BRITAIN, GERMANY, AND FRANCE:

1968 TO THE PRESENT

BY

WILLIAM L. HANCOCK

A Thesis
Submitted to the Faculty of Graduate Studies
in Partial Fulfillment of the Requirements
for the Degree of

MASTER OF ARTS

Department of Political Studies
University of Manitoba
Winnipeg, Manitoba

ISBN 0-315-99048-1

Name

Dissertation Abstracts International is arranged by broad, general subject categories. Please select the one subject which most nearly describes the content of your dissertation. Enter the corresponding four-digit code in the spaces provided.

POLITICAL SCIENCE - INTERNATIONAL RELATIONS — SUBJECT TERM

0616 — SUBJECT CODE

U·M·I

Subject Categories

THE HUMANITIES AND SOCIAL SCIENCES

COMMUNICATIONS AND THE ARTS
Architecture 0729
Art History 0377
Cinema 0900
Dance 0378
Fine Arts 0357
Information Science 0723
Journalism 0391
Library Science 0399
Mass Communications 0708
Music 0413
Speech Communication 0459
Theater 0465

EDUCATION
General 0515
Administration 0514
Adult and Continuing 0516
Agricultural 0517
Art 0273
Bilingual and Multicultural 0282
Business 0688
Community College 0275
Curriculum and Instruction 0727
Early Childhood 0518
Elementary 0524
Finance 0277
Guidance and Counseling 0519
Health 0680
Higher 0745
History of 0520
Home Economics 0278
Industrial 0521
Language and Literature 0279
Mathematics 0280
Music 0522
Philosophy of 0998
Physical 0523
Psychology 0525
Reading 0535
Religious 0527
Sciences 0714
Secondary 0533
Social Sciences 0534
Sociology of 0340
Special 0529
Teacher Training 0530
Technology 0710
Tests and Measurements 0288
Vocational 0747

LANGUAGE, LITERATURE AND LINGUISTICS
Language
- General 0679
- Ancient 0289
- Linguistics 0290
- Modern 0291

Literature
- General 0401
- Classical 0294
- Comparative 0295
- Medieval 0297
- Modern 0298
- African 0316
- American 0591
- Asian 0305
- Canadian (English) 0352
- Canadian (French) 0355
- English 0593
- Germanic 0311
- Latin American 0312
- Middle Eastern 0315
- Romance 0313
- Slavic and East European 0314

PHILOSOPHY, RELIGION AND THEOLOGY
Philosophy 0422
Religion
- General 0318
- Biblical Studies 0321
- Clergy 0319
- History of 0320
- Philosophy of 0322

Theology 0469

SOCIAL SCIENCES
American Studies 0323
Anthropology
- Archaeology 0324
- Cultural 0326
- Physical 0327

Business Administration
- General 0310
- Accounting 0272
- Banking 0770
- Management 0454
- Marketing 0338

Canadian Studies 0385
Economics
- General 0501
- Agricultural 0503
- Commerce-Business 0505
- Finance 0508
- History 0509
- Labor 0510
- Theory 0511

Folklore 0358
Geography 0366
Gerontology 0351
History
- General 0578
- Ancient 0579
- Medieval 0581
- Modern 0582
- Black 0328
- African 0331
- Asia, Australia and Oceania 0332
- Canadian 0334
- European 0335
- Latin American 0336
- Middle Eastern 0333
- United States 0337

History of Science 0585
Law 0398
Political Science
- General 0615
- International Law and Relations 0616
- Public Administration 0617

Recreation 0814
Social Work 0452
Sociology
- General 0626
- Criminology and Penology 0627
- Demography 0938
- Ethnic and Racial Studies 0631
- Individual and Family Studies 0628
- Industrial and Labor Relations 0629
- Public and Social Welfare 0630
- Social Structure and Development 0700
- Theory and Methods 0344

Transportation 0709
Urban and Regional Planning 0999
Women's Studies 0453

THE SCIENCES AND ENGINEERING

BIOLOGICAL SCIENCES
Agriculture
- General 0473
- Agronomy 0285
- Animal Culture and Nutrition 0475
- Animal Pathology 0476
- Food Science and Technology 0359
- Forestry and Wildlife 0478
- Plant Culture 0479
- Plant Pathology 0480
- Plant Physiology 0817
- Range Management 0777
- Wood Technology 0746

Biology
- General 0306
- Anatomy 0287
- Biostatistics 0308
- Botany 0309
- Cell 0379
- Ecology 0329
- Entomology 0353
- Genetics 0369
- Limnology 0793
- Microbiology 0410
- Molecular 0307
- Neuroscience 0317
- Oceanography 0416
- Physiology 0433
- Radiation 0821
- Veterinary Science 0778
- Zoology 0472

Biophysics
- General 0786
- Medical 0760

EARTH SCIENCES
Biogeochemistry 0425
Geochemistry 0996
Geodesy 0370
Geology 0372
Geophysics 0373
Hydrology 0388
Mineralogy 0411
Paleobotany 0345
Paleoecology 0426
Paleontology 0418
Paleozoology 0985
Palynology 0427
Physical Geography 0368
Physical Oceanography 0415

HEALTH AND ENVIRONMENTAL SCIENCES
Environmental Sciences 0768
Health Sciences
- General 0566
- Audiology 0300
- Chemotherapy 0992
- Dentistry 0567
- Education 0350
- Hospital Management 0769
- Human Development 0758
- Immunology 0982
- Medicine and Surgery 0564
- Mental Health 0347
- Nursing 0569
- Nutrition 0570
- Obstetrics and Gynecology 0380
- Occupational Health and Therapy 0354
- Ophthalmology 0381
- Pathology 0571
- Pharmacology 0419
- Pharmacy 0572
- Physical Therapy 0382
- Public Health 0573
- Radiology 0574
- Recreation 0575
- Speech Pathology 0460
- Toxicology 0383

Home Economics 0386

PHYSICAL SCIENCES

Pure Sciences
Chemistry
- General 0485
- Agricultural 0749
- Analytical 0486
- Biochemistry 0487
- Inorganic 0488
- Nuclear 0738
- Organic 0490
- Pharmaceutical 0491
- Physical 0494
- Polymer 0495
- Radiation 0754

Mathematics 0405
Physics
- General 0605
- Acoustics 0986
- Astronomy and Astrophysics 0606
- Atmospheric Science 0608
- Atomic 0748
- Electronics and Electricity 0607
- Elementary Particles and High Energy 0798
- Fluid and Plasma 0759
- Molecular 0609
- Nuclear 0610
- Optics 0752
- Radiation 0756
- Solid State 0611

Statistics 0463

Applied Sciences
Applied Mechanics 0346
Computer Science 0984
Engineering
- General 0537
- Aerospace 0538
- Agricultural 0539
- Automotive 0540
- Biomedical 0541
- Chemical 0542
- Civil 0543
- Electronics and Electrical 0544
- Heat and Thermodynamics 0348
- Hydraulic 0545
- Industrial 0546
- Marine 0547
- Materials Science 0794
- Mechanical 0548
- Metallurgy 0743
- Mining 0551
- Nuclear 0552
- Packaging 0549
- Petroleum 0765
- Sanitary and Municipal 0554
- System Science 0790

Geotechnology 0428
Operations Research 0796
Plastics Technology 0795
Textile Technology 0994

PSYCHOLOGY
General 0621
Behavioral 0384
Clinical 0622
Developmental 0620
Experimental 0623
Industrial 0624
Personality 0625
Physiological 0989
Psychobiology 0349
Psychometrics 0632
Social 0451

COUNTERTERRORISM IN GREAT BRITAIN, GERMANY, AND FRANCE: 1968 TO THE PRESENT

BY

WILLIAM L. HANCOCK

A Thesis submitted to the Faculty of Graduate Studies of the University of Manitoba in partial fulfillment of the requirements for the degree of

MASTER OF ARTS

For My Family

Contents

page

Introduction i

Chapter I
The Hindrances to State Action 1

Chapter II
The United Kingdom 23
Background 23
The Modern Age Begins, 1969-1972 28
Establishing the Framework, 1973-1974 44
Cautious Transition and Flux, 1975-1979 59
Proving Their Worth, 1980-1983 70
The Era of Continuity, 1984-1991 78
The New Phase: A Lesson for All? 96
Summary 98
Notes 101
Abbreviations 123
Structural Diagram, 1968 124
1971 124
1974 125
1980 126
1985 127
1994 128
Abbreviations: Ulster 129
Structural Diagram: Ulster, 1994 130

Chapter III
The West German Experience 131
Background 131
The Beginning, 1968-1972 134
Refining the Response, 1973-1977 145
Continuity in Counterterrorism, 1978-1985 158
A Tougher Stance, 1986-1994 172
Summary 184
Notes 186
Abbreviations 204
Structural Diagram, 1994 205

Chapter IV
Counterterrorism in France 206
Background 206
The Threat Develops, 1966-1972 207
France Starts to Respond 212
Continuity in Policy, 1975-1980 218
Terrorism Escalates, France Responds? 225
Counterterrorism Matures, 1985-1994 236
Summary 251
Notes 254

(Cont'd.)

Abbreviations 268
Structural Diagram, 1994 269

Comparisons and Conclusions 270

Select Bibliography 283

Introduction

At the end of the 1960s, several Arab armies clashed with Israeli forces on a grand scale. In a period of only six days, however, the Israeli defence forces stunned the Arab world by soundly defeating all the armies arrayed against it. The Palestinians were shocked by the decisive loss and concluded that the Arab armies would never be able to help them establish a permanent homeland. Other measures were thus needed to demonstrate to the world that the Palestinians were willing and able to internationalize the conflict; so, from a position of relative weakness, Palestinians began their modern wave of terrorism. Any state could be vulnerable at any time, and the subsequent terrorist assault would take the West by surprise.

At the same time, in the United States and continental Europe, students protested in huge numbers against such issues as the Vietnam conflict, the Shah of Iran and his tour through West Germany, the shock of the Six Day War, unemployment, poverty, imperialism, capitalism, and the Cold War; any issue was deemed satisfactory as a basis for mass protest by huge numbers of radical students. The security services of most countries monitored the radicals as they disrupted societies, carefully watching for Soviet influence. Meanwhile, unknown to the secret services, small groups of terrorists emerged from under the umbrella of radicalism, fully prepared for violent campaigns against governments and the 'system'. A wave of terrorism would take the European continent by surprise.

In Northern Ireland, the lack of full civil rights for a third of the population spawned protests and demands for change, which was met by stiff resistance on the part of the majority. Clashes in the streets became commonplace and the security forces slowly lost their ability to maintain

order. People were dying at the hands of the police and from inter-communal violence, while terrorist groups began to form under the noses of the authorities, riding the coattails of the civil rights movement. The security services had little idea what was happening, or what was to come; tens of thousands of British soldiers eventually assumed control over the province of Northern Ireland as order almost completely vanished. An organized, mass movement of terrorists would take Great Britain by surprise as the Ulster conflict gradually spread outward.

The Troubles in Northern Ireland became worse as the 1970s wore on. The province was nearing a situation of complete anarchy, and the British government was forced to respond by assuming control of the political and security arrangements there. Meanwhile, in Great Britain itself, order was not decaying as it was on the continent, although a small group of anarchists calling themselves the Angry Brigade managed to destroy bits of infrastructure in rural areas, earning no consideration of them as a threat, but as an annoyance; they were rounded up by the police rather quickly and the situation returned to normal. Additionally, groups of Palestinian terrorists established bases in London, Paris and elsewhere, hoping to attack their enemies in the full glare of the Western media. The problem was for Great Britain to resolve, just as terrorism in Germany was not a French concern, and vice versa. In each country, terrorism was something used by Palestinians or the Irish; none of these states even considered terrorism to be a shared plague. The Irish Troubles was something that would never affect Germany; the Red Army Faction (RAF) was something that would never affect France or Great Britain; various French and Spanish groups would never affect Germany or Great Britain.

With the exception of the occasional terrorist act carried out by Palestinians, and in light of various legal and political reasons such as prayers for isolationism, terrorism was someone else's problem, not ours, held the conventional wisdom.

In Germany, the Baader-Meinhof Gang, later the Red Army Faction (RAF), began destroying offices and department stores by using arson. Captured shortly thereafter, the members were found not to be the oppressed, the downtrodden, or the poor; they were the spoiled children of the upper-middle classes, presumably frustrated with the current social order but also not considered overly dangerous to society. They were convicted of some criminal offences related to terrorism and were sentenced to short terms of incarceration. These angry children, it was thought, would find time to see the error of their ways and would eventually rejoin society as useful citizens. Naturally, the courts were unaware that the members of the RAF would seek training in the Middle East in the tactics of terror, weapons use, and would establish contacts with Arab terrorists. Besides, hijacking was a far more serious problem and it was becoming more frequent, better organized, and occasionally more violent; there was certainly enough media attention on this issue. Additionally, terrorism from Middle Eastern sources struck at the heart of Germany and intensified over the next two decades, causing successive German governments to place greater attention on security procedures. Whether national or international, terrorism grew at alarming rates and had to be confronted.

France faced much the same problem. Early attempts by domestic groups to terrorize were not especially effective unless carried out by groups with Middle Eastern connections. The greatest concern was

hijacking, while the small domestic groups were frustrated youth, not particularly sophisticated or terribly active. Yet within a few short years, France became a battleground for Arab terrorists and Israeli secret services, the Spanish separatists (Basque ETA) gradually forced France to concentrate some efforts to the south, and Corsican nationalists began a massive bombing campaign against French targets. Armenians attacked in force and with particular brutality, and by the late 1970s and early 1980s France became a primary location for Middle Eastern battles. France and Germany both faced what they believed were spasmodic bouts of violence from a particular sector of society, but the problem surely would not be permanent; after all, the greatness of democracy owed its strength to open political participation. That openness would certainly triumph, or so it was thought.

The breakdown in social order and a sustained wave of terrorism occurred at roughly the same time in the three largest liberal democracies in Europe: the United Kingdom, West Germany, and France. These states had fine records as open societies governed by the rule of law, they were the strongest military and economic powers in the region at the time, and had superb traditions of respect for human rights. The Big Three, however, also became the focal point for sustained terrorist attack, both from within their own societies and from outside sources such as Palestinians, given the convenient geographical proximity of Europe to the Middle East, the free movement allowed by European countries, and a low level of security against substate violence. To a greater degree than many others, these states were also large centres of media attention, since occurrences in London, Bonn, and Paris could ultimately affect global

politics; the media thus became a tool of terrorism. The great democratic powers of Western Europe came under assault from a variety of sources, and all had to respond to the new threat using powers beyond those of regular criminal procedures.

In the face of these sudden terrorist attacks on the great Western European democracies, there was clearly a case for legal reform, improved intelligence, and a host of other measures, but there were problems with that approach given the fact that no government wanted to destroy democracy in the mad rush to eliminate terrorism. Furthermore, there was no agreement on the nature or scope of the threat, and none of the major European democracies could agree that they were each under attack at a basic level, even though it was obvious that some hostile states were occasionally involved. Each state's terrorist problem remained its own, and no assistance or intergovernmental structure was established to find a common approach. This international problem remained a national one in the eyes of governments. All that changed with the Munich Massacre of 1972, when a handful of Palestinian terrorists disrupted the Olympics by kidnapping and killing a number of Israeli athletes. The clash between the Bavarian police and the terrorists demonstrated that the German police were outgunned and unprepared for such an event, and the episode jolted the Europeans from their complacency. Suddenly, it was absolutely clear that something had to be done, and all three major European powers began to respond to the terrorist threat. Still, the fact remains that the problem had existed since the late 1960s and counterterrorism would take years -- even decades -- to mature in some areas. In this thesis, the key question is to determine why Great Britain, Germany and France took so long to

develop effective counterterrorism programs when it was abundantly clear that a threat to order existed and was getting worse very quickly.

The purpose of this paper is to apply four theoretical bases that demonstrate the hindrances faced by these three states when implementing effective counterterrorism procedures, including defining the problem, maintaining the values of liberal democracy, incrementalism in decision-making, and organizational and bureaucratic politics. An analysis using these four areas will explain why so much time elapsed between the onset of the modern age of terrorism and when governments finally decided to respond forcefully.

The first theoretical approach concerns the definition and identification of the threat. States are unable to respond to a threat that has not been accurately defined and assessed according to firmly established criteria. The strength of the movement or movements, the sources of support for such groups, the weaponry involved, the possible targets, and the frequency of violent activity are all indicators that must be scrutinized in order to provide decision-makers with crucial information. Without this input, political leaders are incapable of designing balanced and effective responses to terrorism. The failure to answer these questions is a direct function of a lack of information, which results in either no government action, consistent underreaction, or incorrect policy decisions. At the point where the threat is more fully understood, governments are in a better position to respond effectively.

The second theoretical approach concerns the hindrances placed on counterterrorism by the nature of liberal democratic societies. Values such as the rule of law, freedom, and human rights are an integral part of the

psyches of the public and the authorities in charge of decision-making. Governments are thus hampered in the process of fighting terrorism by the principles they have sworn to defend, since effective countermeasures may require a more intrusive and intolerant state. The key problem for governments is to strike a balance between repression and openness without damaging the basic values of society. This hindrance is separate but connected to all other limiting factors.

The third theoretical approach to the study of hindrances to effective counterterrorism concerns incrementalism in decision-making. Counterterrorism is a process of trial and error in which a series of terrorist acts or a few particularly brutal ones will provoke some reaction from a given government, even though the change may not radically affect policy itself in the short term. Uncertain of the meaning and intent of the terrorist attacks and the implications of possible responses, governments will tend to choose small changes in security structures and policies in an effort to solve the problem using minimal changes which carry little risk.

In the long term, however, the sum of incremental shifts made in response to terrorism tends to demonstrate a dramatic change in policies and countermeasures. Agencies of the state that are involved in counterterrorism receive increased budgets and manpower levels, and these shifts demonstrate the areas in which a government believes its resources can have the most impact. The result of this process is that governments receive greater amounts of accurate information over time, which contributes to an understanding of the threat, and therefore further decisions are made that do not threaten society as a whole. Additionally, the objective of governments is to increase the chances that terrorists will

be captured, imprisoned, or killed, while the rights of the public are maintained.

The fourth hindrance to effective counterterrorism involves organizational and bureaucratic politics. The composition of modern liberal governments means that different organizations and individuals with competing interests tend to interpret the goals of counterterrorism and the means of attaining those goals in different ways, thereby contributing to policy confusion and ineffectiveness, which in turn does little to diminish the threat. These organizations can work at cross-purposes, effectively cancelling the political message governments wish to convey. By controlling the budgets of organizations, governments attempt to control and influence any negative organizational or bureaucratic behaviour. Organizations, on the other hand, are pressured by governments to target specific areas of weakness in the overall counterterrorism plan by incrementally creating sub-units, while refraining from threatening societal norms and values. Due to the tendency of multiple organizations and multiple sub-units to operate in secrecy, governments may also face information blockages that prevent better understanding of the threat, which hinders effective policy-making. Furthermore, communications between sub-units and their leaders tend to be less than ideal, making intelligence failures commonplace. Governments must overcome this problem in order to lessen the success rate of terrorism.

The format of this paper is narrative, chronological and empirical, demonstrating the context of the threats faced by Great Britain, (West) Germany and France, and how counterterrorism in each of these states gradually evolved. Chapter I will provide a discussion of the theoretical

hindrances to counterterrorism. Chapter II will examine the evolution of counterterrorism in Great Britain since 1968; Chapter III will examine the experiences of Germany; Chapter IV will do the same for France. After this has been completed, another brief section will provide a discussion of the differences and similarities of the counterterrorism processes of these three European liberal democracies, and the relationship between these experiences and the four theoretical hindrances to effective counterterrorism.

Chapter I: The Hindrances to State Action

Since 1968, terrorism has provided a challenge to the security of Great Britain, Germany and France. Terrorist threats from a variety of political sources have exponentially increased, effectively placing greater strains on the security apparatus of these three states. Violent political activity from groups based either internally or externally has required states to respond by instituting changes in structures and procedures. Terrorism and counterterrorism combine to exemplify the process of action and reaction between illegitimate and legal force, and between order and anarchy. Faced with a substantial and sustained terrorist attack, states are obligated to respond to that threat. Indeed, the three great European liberal democracies have gradually come to the realization that a number of measures are required in the attempt to prevent violence or to bring those responsible to justice. This process has taken time in all three states, and it is important to examine the reasons why countering the terrorist threat has taken so long.

There are four essential reasons why terrorism was not effectively countered for a substantial period of time, including the elusiveness of a definition of terrorism and any related understanding of the problem, the values of liberal democracies, the incremental nature of policy-making in such an environment, and organizational and bureaucratic politics. All four factors are inextricably intertwined, operate in tandem, and serve to complicate the process of sound counterterrorism; the very nature of liberal democracies effectively hinders quick and effective measures against terrorists, quite unlike the capabilities of repressive, totalitarian regimes. Democratic governments certainly have the power to quell rebellions or control small groups formed into violent gangs, and it may seem

paradoxically positive that governments have not been willing to move to crush terrorist movements, since such measures could quite easily destroy democracy itself. However, these governments have been painfully slow to react to terrorism and the negative aspect of this has meant, of course, that certain populations have endured terrorist campaigns longer than necessary.

The first major hindrance to effective counterterrorism involves the calculation of the actual threat and the source of that threat. This process requires an accurate definition of the phenomenon and a determination of whether the group or groups are internal, transnational, state-directed, or state-supported. The size of each group, the weapons involved, the tactics of each group, and the intended goals of each must be carefully analyzed. The definition of terrorism provides the government with a legal and analytical guideline which helps determine what must be fought and at what point a small group falls under the rubric of a terrorist group as opposed to a purely criminal gang. All terrorism involves murder, attempted murder, wilful destruction of property, and a host of other violent events. The essential difference between terrorism and regular criminality, however, usually lies in the motive for such activities. Thus, a crime of passion is not normally intended to influence a wider crowd, does not involve the same degree of media attention and fear, and can be dealt with using existing criminal statutes; the same applies to criminal activities which are used for personal or private gain. Terrorists, on the other hand, care less about the victims of their activities than the political demands made during a given campaign of violence. The criminal nature of terrorist acts or threats is overshadowed

by political considerations. The problem of defining terrorism thus involves separating it to some degree from regular criminality, while at the same time ensuring that the problem itself is not blown out of proportion.

Accurate definitions of terrorism are certainly plentiful, as Alex P. Schmid discovered when he found some 109 of them in a study concentrating on the definitional quagmire.[1] More important for the analyst is the creation (or emphasis) of a definition which neither dismisses terrorism as a threat nor exacerbates fear by calling terrorism another war that threatens the very existence of all societies. To be sure, there are small groups that have little effect on the societies in which they operate, and at the other extreme there may be groups operating under the directions of a state, which would therefore constitute an act of war, however small. Threats that can be more easily understood are those which emanate from within and constitute a significant disruption of society without causing the collapse of governments, and which tend to be more vulnerable to state countermeasures. In this vein, terrorists that attack once and flee the country are not susceptible to the victim state's legal recourse in many instances, while domestic groups must themselves live in constant fear of apprehension.

Violence, the threat of violence, fear, intimidation, and coercion are merely a few of the descriptive terms usually attached to definitions. While it is true that terrorism is illegal and most acts of terrorism fall under most criminal statutes, the problem is larger than that in reality. Most governments have altered criminal procedures and state structures to meet the threat even though the greatest threat may have been from a mere fifteen people at any given moment, as was the case in Germany at

a particular time. Terrorism can also affect a state and its citizens if and when the threat is primarily external, as has been the case with the IRA or Kurds or Islamic revolutionaries when they have operated in western Europe. Some of these external groups are given support and sanctuary by hostile states and thus can present the greatest danger to democratic societies, since better weapons, explosives, tactics and information can be made available to violent groups by states seeking to alter a particular order or seek revenge on another foreign government. Hence, any definition must account for five factors in the threat: internal, external, state-supported and state-directed groups, as well as the state itself in extreme circumstances, and any combination of the above. The definition must also account for tactical and strategic realities of the problem, such as threats or acts which are designed to alter the policies of states, and the same combination of factors which may not be aimed at a specific state or government, but may be designed to influence, say, a particular ethnic sector of society. One such definition largely accomplishes the objectives as established above, and will be accepted for the purposes of this paper. Terrorism shall be regarded as "the purposeful act or the threat of the act of violence to create fear and/or compliant behaviour in a victim, and/or audience of the act or threat".[2]

The second major hindrance to counterterrorism involves liberal democratic values. One of the most important of these values, held by any society, is the concept of the rule of law.[3] Elected representatives carry out the wishes of their constituents by creating, altering or abolishing laws which are required for the effective functioning of society, but this process must be tempered by the constraints of constitutionality. Thus,

the judiciary may enforce the laws passed by the executive and legislative branches of government, but may also declare them illegal. This system of checks and balances ensures that the power of the government never exceeds what was originally intended, and that no executive activity can exceed the boundaries as they are written in law. At the same time, citizens are bound by these same rules. Constraints placed on governments are also placed on the population, since anarchy must be avoided. Terrorists, however, do not function with the rule of law in mind; they fully realize that governments have limited powers, so terrorists intentionally operate in such a fashion as to decrease the possibility of effective countermeasures. Neither written law nor societal norms serve to constrain the activities of terrorists, but these two features effectively limit the actions of governments.

Freedom is another prized value of liberal democracies. Citizens fully expect as much freedom as possible, and this is enforced by law. People expect freedom of movement, association, and speech without fear of an intrusive government. The ability to discuss and criticize openly is embodied in a free press, uncontrolled by any government agency. Information is therefore accessible, input can be made into the decision-making process through public criticism, and the media acts as a check against the possibility of government overreaction. Additionally, people expect and are given freedom from government surveillance and control, except in grave situations involving national security. Also, the civil rights of the individual ensure that any person cannot be arbitrarily arrested or detained without access to legal defence or without reasonable cause. All these cherished values of liberal democracies combine to form

the core and the essence of human expectations, yet the terrorist uses these very freedoms against the population and the state. Since a terrorist group wears no uniform, the individuals that form the group have the same rights as any other individual. The state, faced with a terrorist threat, must therefore find a way to fight terrorists without violating or destroying the values and laws that society as a whole deserves and expects, yet the government must also be seen to be firm in its ability to maintain order. Therein lies the dilemma of democracy when faced with terrorism.

While democratic governments are constrained by specific rules which limit the necessary activities of counterterrorism, another feature of democracy works to change that problem. Thus, the rule of law and the values associated with democracy can also be seen from the sharp side of the sword. The voting public remains the most important unit in democracies, and when faced with chaos and violence, the same public that cherishes freedom from government can demand and receive the opposite. The demands made on governments to retain only skeletal security services and structures can be completely reversed in a situation of sustained terrorist attack. The public can demand enhanced security procedures in public places such as airports, they can decide to strengthen gun controls, cry for increased surveillance of suspected terrorists, influence immigration policy, and make demands for capital punishment for acts of terrorism. In the face of a wave of terrorism, the public can dramatically affect the actions of governments, particularly as elections loom on the horizon. Security can become a primary issue in an election, with law and order rising to the peak of the electoral agenda. This is a feature only present

in democracies, since totalitarian regimes do not need to satisfy public opinion. Thus, democracies have enormous potential strengths in security against terrorism to go along with the aforementioned weaknesses. The rule of law does not mean capitulation or defeat; it only means caution in the decisions regarding counterterrorism. The values of liberal democracies are part of the decision-making process and can serve as hindrances to effective counterterrorism, and this area can be seen as separate but connected to other hindrances.

The third major hindrance to effective counterterrorism involves incrementalism. An astonishingly common feature of the policy-making process is the small steps taken by governments as opposed to large, sweeping changes which could have more substantial effects on terrorist groups. This is a trial and error process in which a series of terrorist acts or a few particularly brutal ones will provoke some reaction from a given government, even if the change does not radically affect policy itself over the short term. The long-term effects of incremental changes made as responses to terrorist activities may, however, not be particularly different than what may have occurred if the government had altered internal security from the beginning. This slow process relates directly back to the problems of defending democracy without compromising its values, and the added confusion of a lack of understanding about the actual threat posed by terrorists. Public outcry can also feed this process.

Like other policy problems faced by governments, the ones posed by terrorists "must first be perceived and accurately defined before they can be solved",[4] yet difficulties arise in the overall policy process. First,

since there are many actors interested in counterterrorism, not all may agree on a particular definition or significance of the threat. Thus, a lack of clarity or direction from above allows competing agencies to create or insist on certain programs which may not be coordinated with other agencies. Second, as opposed to the rational decision-making model of political theory, the secrecy of terrorist groups makes it highly unlikely that any agency or government has perfect information. The end result of this means that governments and organizations must make decisions based on imperfect or non-existent information, which is a direct consequence of poor intelligence. Third, incrementalism suggests that governments can achieve an agenda by confrontation and compromise with agencies, which can result in a policy outcome with great disparities from the intended goals. Finally, as Hayes has said, "incrementalism often means not just a small policy change but also inadequate statutory powers and limited appropriations for most agencies, making implementation difficult".[5] Overall, the decision-making process in counterterrorism may have little resemblance to the rational model; instead, inexplicable policies and programs can result from the tendency toward incrementalism in government.

The most obvious manifestations of incrementalism are increases in manpower and budget levels for police agencies, along with slow, case-by-case changes in responses to threats, which in turn reflects the evolutionary process of counterterrorism. The normal reaction of a government faced with extreme violence is to increase staffing for the police, since those agencies are the most visible aspects of any counterterrorism strategy. Since terrorism involves criminal acts, the

police are called in to resolve situations, arrest the offenders, and process them on their way through the criminal justice system. More police has the added benefit of convincing the public that they are safer from terrorism.

Problems can be encountered as it becomes evident that the police forces may not be adequately equipped to deal with terrorism emanating from a variety of sources, from new sources, or from skilled adversaries who show great expertise in avoiding the police through various means. Budgets again may be the great beneficiaries, as computerization can assist the police in finding their quarry; this creates the definite impression that terrorists do more to modernize the police than would otherwise be accomplished. However, when it becomes apparent that the modernized, strengthened police are still unable to defeat terrorism, it becomes necessary to invoke other measures which may complement the police. Criminal and procedural laws may be altered for terrorists, the police may receive powers of detention which would normally not exist or be allowed, trials by jury may be banned for cases involving terrorists, governmental structures are created to coordinate the efforts of the security agencies, the police and the military, and changes can be made involving the creation or willingness to use special forces, although the task of counterterrorism may seem to be purely a police role. Incremental shifts can, and frequently do, change the way governments seek solutions to such problems as terrorism.

The small changes made by governments according to incrementalism eventually add up to a much greater whole, as overall policy comes to reflect the sum of all changes. For example, a government typically begins

with an unclear stand, preferring to allow terrorists dictate the next countermeasure. Buildings may be destroyed and otherwise damaged until the government decides that certain changes are due, including placing more police on the streets. Hostage incidents may increase in frequency and lethality until special forces are assigned to resolve such attacks and effectively make such options more costly for terrorist groups. Bombings may be so frequent that it becomes necessary to train people to defuse the devices, making a successful bombing more difficult to achieve. Kidnappings may occur at alarming rates until governments realize that they can no longer make concessions, since to do so either encourages more such acts or does not discourage them, and only serves as a source of embarrassment. Many other incremental changes in approach occur as well.

The sum of these parts creates the impression that governments begin at some point to be pulled by their past changes and find themselves in a situation where policy becomes hardened. Each small change in structure, law, police, finance, or other countermeasures adds up to a point in which governments have the tools to challenge terrorists strongly and effectively, so that option becomes more likely with each additional change. Policy can change quite dramatically in the long term, as each "policy cycle" contributes a small change and can constitute a quantum shift over time.[6] Over the course of several years or decades, terrorism may not necessarily be eradicated, but becomes more costly to the terrorists. The process of trial and error gradually works to alter government behaviour in the reaction sphere, and may even encourage more assertiveness on the part of the government. In short, successful

terrorism tends to lead to its own demise by encouraging further steps against it. Governments become better prepared and more willing to prevent future outrages.

The fourth major hindrance to effective counterterrorism involves organizational and bureaucratic politics.[7] Since liberal democratic governments are comprised of a number of organizations and leading personalities, all with competing interests, the establishment of policy and the means used to achieve goals may be interpreted in different ways by these organizations and individuals. Governments establish overall guidelines that are intended to lay foundations for the way in which organizations deal with certain problems, but the interests of bureaucracies may cloud the issues. Organizations and senior personalities may decide that a certain course of action is preferable, even if the government did not originally intend it. Furthermore, organizations and individuals with competing interests may work at cross-purposes and as their own interests dictate. Problems are thus created for governments in addition to the original plan of combating terrorism.

Since governments are constructed of smaller units such as organizations or agencies, the latter provides a useful unit of analysis when determining state action against terrorism. The requirements of decentralization in problem-solving results in "fractionated power", or a condition in which a number of organizations and sub-units are created for specific tasks.[8] However, this decentralized structure may result in such difficulties as competition between organizations and sub-units, confusion of goals and means, disparity between units related to a defined problem and the interpretation of that definition, the quest of each unit to survive

at all costs, and the tendency for organizations to establish routines and programs which may either be somewhat unrelated to the desired goals or be defended and continued after the program has been proven ineffective. Furthermore, agencies are "constantly jockeying for power, position, and prestige, and this behavior has enormous consequences for public policy".[9]

One distinguishing feature of organizations, according to criteria established by Max Weber in 1921, is the tendency of agencies to have fixed jurisdictions that are controlled by clearly written rules and regulations.[10] Within that context, each agency establishes standard operating procedures (SOPs) in order to effectively control the outputs of that agency and its employees.[11] Such programs and procedures ensure the smooth functioning of the bureaucracy within anticipated sets of demands, yet problems can arise from this structural and administrative arrangement. First, the amorphous nature of terrorism requires accurate anticipation of the threat and the best responses to it, yet organizations are notoriously slow to react, particularly in instances of imperfect information. Second, programs established to meet a given threat may not, in fact, be best suited for the task. Third, organizations tend to be incapable of handling all problems at the same time, so limited attention may be placed on an aspect of a threat, beginning with the problem perceived as most pressing.[12] Fourth, in the search for policy options, the first good option will be emphasized, but not necessarily the best.[13] Fifth, certain tendencies of governments and organizations can be observed, such as incremental changes in budgets and procedures as opposed to sharp shifts; stable priorities, perceptions and issues even in the face of external change; program momentum carries procedures beyond

normal usefulness; and new actions tend to be slight adaptations to existing ones.[14] These difficulties force governments to consider other options.

Faced with sets of organizations that do not rapidly change to meet constant changes in threats, governments can be forced into agency restructuring that can be counterproductive. An organization tasked with countering terrorism can receive orders from political masters to counter a specific aspect of a threat, such as a shift in targeting. Rather than engaging in a complete internal shift, the organization will tend to create sub-units to handle a broad spectrum of real or perceived threats. Thus, over time, agencies further decentralize in order to meet political demands, which creates an enormous challenge for governments. The number of organizations and sub-units expands to the point where information is inefficiently handled, competition between agencies becomes unhealthy, and each unit strives for self-survival as opposed to handling the given task. Therefore, since delegated power is required for action, "the necessity for decentralization runs head-long into the requirement for coordination".[15] Governments are thus faced with the danger of inefficiency due to scattered power, which in turn can manifest itself most destructively in the quest for centralized information services. Preventing terrorism becomes more difficult.

The strongest methods governments have for controlling the actions of organizations are financial incentives and the establishment of the clearest possible guidelines for expected actions. Budgets can be increased, decreased, or maintained according to the results of the organization, juxtaposed with the results expected and achieved by

competitive agencies. Guidelines, on the other hand, are designed to provide the organization and its leadership with overall goals and limitations, which are translated into standard procedures. Each organization interprets the set guidelines and decides which course of action to take in order to achieve the desired results. This process entails a degree of decentralization or delegation of authority, which in turn produces a greater problem.

The single greatest problem in counterterrorism, which is essentially based on information, is that decentralization does not discourage unreasonable degrees of compartmentalization and inter-service rivalry. Organizations and governments frequently establish sub-units to deal with areas of security which may have been overlooked in the beginning of the process and in accordance to perceived shifts in terrorist targeting. These units and sub-units hold their own interests and information, and seemingly unrelated or irrelevant bits of information may be overlooked. Hence, an overall security structure that emphasizes delegation of authority and the creation of an excess number of sub-units may unwittingly create a situation in which information is gathered in a haphazard manner and never used to its full potential. The proliferation of organizations and sub-organizations can add to the potential for enormous and frequent security failures.

Another problem inherent in bureaucratic government and related to competing organizations is the tendency toward secrecy, both between organizations and between them and the government as a whole. It is not uncommon for some organizations to overlap their operations without discussing cooperation, creating unnecessary duplications of information

which, in turn, may produce entirely different conclusions upon careful analysis. The anticipation of an event may therefore be clouded in the eyes of government because it receives contradictory reports. Worse still is the secrecy of organizations when dealing with political masters. Some structures will be reluctant to divulge information which could be used by governments in such a fashion as to create better policy and recognize strengths and weaknesses among terrorist groups. The tendency of organizations and sub-units toward this secrecy therefore creates inefficiencies that could be avoided, although a massive, centralized organization presents itself as a creation to be feared. Proper administrative oversight might therefore strike a balance between the two extremes.

In addition to organizational politics, bureaucratic politics affects the plans and procedures of counterterrorism. Civil servants who head important organizations or sub-units may tend to emphasize the importance of their unit in order to receive continued funding and greater recognition. When options for policies are presented to political masters, these senior bureaucrats have a great deal of control over the available choices. Rather than presenting a balanced perspective of available options, it may be common for a senior department head to have made the decision ahead of time; one option can be presented as the most favourable one, with one or two unacceptable choices on the menu. The government minister then naturally selects the best option as it has been presented, which can inflate the importance of the presenting agency and the head bureaucrat.[16] Indeed, the goals of the career civil servant may take precedence over the goals of the government, in that the former seeks

greater power while the latter seeks effectiveness. When these goals clash, the overall counterterrorism plan can lose the battle.

Each bureaucracy tends to form an internal set of priorities called the "agency ideology".[17] Since the top bureaucrats of each agency possess the best and most accurate information regarding problems in their issue-areas, they can ensure that the government receives information which will tend to result in an increase in the importance of that agency by becoming economical with the truth, or by giving the government select bits of information as opposed to the full picture. The feasibility of options can be moulded by these bureaucrats, as can the techniques that will be used to implement the chosen course of action.[18]

This situation may not necessarily be the fault of the bureaucracy itself, since there are three main reasons for a failure to comply with government directives, all of which involve poor communication.[19] First, operational level officials may not be clear about the task they are supposed to perform and what measures should be used to implement the program. Second, bureaucrats may not be able to perform certain tasks because the directive is too broad, resulting in too many options for operations. Third, bureaucrats may resist directives because personal or organizational interests may contradict the directive. Orders may be withheld, cosmetic changes alone may occur, delays may be placed ahead of the directive, and the spirit of the order may be ignored.[20] All this may not necessarily indicate any malice on the part of the bureaucrats, but it serves to complicate the decision-making process and the coherence of policies chosen by governments.

In summary, organizational and bureaucratic politics may have inputs

into the structure, behaviour, and efficiency of counterterrorism. Units are created, sub-units are added, and competition between them increases with each incremental change. Besides the inefficiencies created by such changes, the information blocks established between the organizations effectively hinder good counterterrorism. Governments may try to remedy this by budget feasts and famines or by replacing top bureaucrats, but the blockages are likely to remain. The only other alternative to the government is a system of command and control that can attempt to coordinate agencies, centralize information, control and limit turf wars, and prevent systemic abuses of power by competing organizations. To date, this option has been chosen over the less palatable one of creating a more centralized security structure, even though the latter would likely be more effective. Organizational and bureaucratic politics can be observed as a hindrance to good counterterrorism in Britain, Germany and France in empirical terms.

The four theoretical perspectives mentioned above provide a framework for the analysis of counterterrorism. These hindrances to government action in liberal democracies are evident in the six major areas of government countermeasures, including overall policy, the size and structure of police forces, the creation and deployment of special forces, certain changes and reforms in court procedures and legal measures, the establishment of command and control structures designed to oversee the operations of the national responses, and the reform and deployment of national intelligence services against terrorist groups. These six areas form the core of national response mechanisms and will thus be placed under tighter scrutiny than other responses, such as diplomacy and

international law. While the latter two mechanisms are certainly important for the study of counterterrorism, the secrecy of diplomacy in this field prevents thorough examination. Second, international law has been almost entirely ineffective in controlling terrorism; terrorists and their sponsors flout the law, while liberal democracies must operate within it. Finally, ethical and moral issues related to state responses will not be examined in detail, although the theoretical approach regarding the values of liberal democracies provides strong hints about an interconnection between those values and the ethical behaviour of governments. For the purposes of this paper, the aforementioned six mechanisms will serve as focal points.

First, governments have been forced to establish policy. Since no response to terrorism can be developed or analyzed without some national guideline, the policy of states is an important feature for the examination of counterterrorism. All governments start at a position of zero, or benign neglect, since there is virtually no proof that any specific countermeasures have been established. Policy reflects the overall position of governments in that it demonstrates the conscious and intended desires of national leadership.

There are a number of descriptive terms on the response continuum beyond the position of benign neglect. 'Avoidance' suggests that a government is aware that a threat exists, but there is uncertainty regarding the nature and scope of the threat and the need for strict countermeasures, resulting in no effective action. 'Active involvement' denotes a policy between avoidance and harsh countermeasures, reflecting the early stages in the development of counterterrorism in which governments take only cautious and incomplete reactive steps. Closely

related to this policy is 'flexibility', in which governments use a broad range of responses from surrender to retaliation and where no single description can be affixed to the long-term position of affected states; the reactions of governments are essentially made in accordance with a specific crisis. 'No concessions' refers to a general unwillingness to capitulate, indicates that the government is prepared to enforce that policy choice with a plethora of countermeasures, and that those countermeasures become quite visible. 'Retaliation', which is at the extreme end of the spectrum, suggests that governments have developed the political will and the internal structures that can be used to strike back at terrorists and their sponsors, including the use of armed force. The most desirable long-term policy is 'no concessions', since governments come to the realization that they have little to lose and possibly much to gain by refusing to allow terrorism to succeed.

The second major countermeasure involves police forces and the sub-units that are added to traditional force postures. Over periods of time and in direct relation to threat, police forces expand enormously in terms of manpower, computerization, and overall budgets. The third major countermeasure involves the establishment and use of special forces, or those specialized units from military and paramilitary organizations that are designed specifically to be used against terrorists, and therefore represent the onset of a tougher policy. The fourth major set of countermeasures involves incremental changes to criminal and procedural law, along with changes in court procedures, including the use of juryless trials. The fifth major countermeasure is indirect, in that governments establish centralized command and control structures in order to facilitate effective

coordination between organizations and sub-units, and to ensure effective and timely transfer of information.

The sixth countermeasure available to governments is also arguably the most important. National intelligence agencies are perhaps the only means with which governments can actually prevent terrorist attacks, either singularly or as part of a larger campaign. Using methods and procedures not generally available to other government bodies, intelligence agencies have unique abilities that can be used for covert investigations, warnings regarding future trends, the identification of terrorists, and the use of discreet measures against terrorists and their sponsors. Most importantly, intelligence agencies are frequently cited as the first line of defence against terrorism, since timely and accurate information can assist governments in policy-making and correct choices regarding the possible use of direct or indirect force against terrorists. In the evolution of counterterrorism, the expansion and use of intelligence agencies to provide security represents the highest stage of development to date. Although these organizations can function effectively only with the cooperation of military, paramilitary, legal, police, and other countermeasures, the intelligence agencies can provide governments with the ability to pre-empt the activities of terrorists. In this regard, the use of intelligence agencies demonstrates tougher policies and therefore a demonstration of stronger overall policies. Finally, an empirical examination of Europe's three greatest liberal democracies can provide the basis for determining the similarities and differences between the three countries and the theoretical explanations for divergences and convergences in policies.

Notes to Chapter One

1.Alex P. Schmid, Albert J. Jongman, Political Terrorism: A New Guide to Actors, Authors, Concepts, Data Bases, Theories, and Literature, New Brunswick, NJ: Transaction Books, 1988.

2.Michael Stohl, The Politics of Terrorism, cited in David Charters, ed., Democratic Responses to International Terrorism, Ardsley-on-Hudson: Transnational Publishers, 1991, p.16

3.For a thorough treatment of this subject, see Paul Wilkinson, Terrorism and the Liberal State, London: MacMillan, 1986 (2nd ed.).

4. Michael T. Hayes, Incrementalism and Public Policy, New York: Longman Publishing Group, 1992, p.2

5.*Ibid.*, p.19

6. *Ibid.*, p.4

7.For a thorough treatment of this subject, see Graham Allison, Essence of Decision: Explaining the Cuban Missile Crisis, Glenview, Ill.: Scott, Foresman & Co., 1971; especially chapters three and five.

8.*Ibid.*, p.80

9.David C. Kozak, James M. Keagle, eds., Bureaucratic Politics and National Security: Theory and Practice, Boulder, CO.: Lynne Rienner Publishers, 1988, p.7

10. Florence Heffron, Organization Theory and Public Organizations: The Political Connection, Englewood Cliffs, NJ: Prentice Hall, 1968, 1982, p.5

11. Allison, *op. cit.*, p.83

12. Allison, p.82, calls this "sequential attention".

13. *Ibid.*, p.76

14. *Ibid.*, p.91

15. *Ibid.*, p.85

16. Morton Halperin, "The "X" Factor in Foreign Policy", Washington: Brookings Institution Report #140, 1975, p.7

17. B. Guy Peters, The Politics of Bureaucracy, New York: Longman & Co., 1989 (3rd ed.), p.184

18. *Ibid.*, p.186

19. Morton Halperin, Bureaucratic Politics and Foreign Policy, Washington: The Brookings Institution, 1974, p.238

20. *Ibid.*, p.250-254

Chapter II: The United Kingdom

Background

The United Kingdom has a long and bloody history regarding threats to security other than conventional warfare, particularly with reference to guerrilla warfare and terrorism.[1] In every instance of violent political activity emanating from nonstate actors, Great Britain has responded accordingly, assigning special police units, intelligence agencies, the military and the judiciary to roles in the struggle for order. Every campaign of terrorism has been met with appropriate countermeasures, such as new legal measures by the government of the day, the use of troops in the role of aid to the civil power, the tasking of intelligence assets to meet the threat, and the creation of specialized police units charged with narrow goals. Terrorists have accomplished little against the British with the exception of assisting the authorities in the creation of new bureaucratic machinery for the purpose of combating terrorism. Over the years, this constant process of action and reaction between terrorists and governments has resulted in a cluster of institutions and behavioral processes which have now neared the apex of development.

One of the first instances of the process of counterterrorism occurred in the early 1880s when Fenians rioted and bombed their way through Great Britain, hoping to secure political change. This sort of violence proved counterproductive, as it "led to the formation of the Special Branch of the Metropolitan Police".[2] The 1916 Easter Uprising accomplished nothing as well, save for the possible creation of the Irish Republican Army (IRA) as a folk legend of sorts. The IRA had taken advantage of British involvement in World War I to foment rebellion;

instead, they were quickly and forcefully suppressed. The IRA continued their campaign in 1919, ushering in a newer phase of terrorism and guerrilla warfare. The Black and Tans, the British army and the police were instrumental in suppressing this period of violence, although the era is negatively remembered for the questionable activities of the security forces. By 1922 the process had killed some 300 people, wounded another 1000, and resulted in some £3 million in property damage.[3] IRA terrorism was enough of a problem that it forced the Stormont government to introduce a new piece of legislation, the Civil Authorities (Special Powers) Act 1922, which permitted internment of suspected IRA activists for indefinite periods of time without trial or charge.[4] Once again, the terrorists had solved nothing, and the governments affected began their journey toward a more complex procedure for combating terrorism.

Intermittent outbreaks of violence gave the Stormont government the excuse to make the Special Powers Act permanent in 1933, even though the Act had been intended as a temporary solution.[5] In 1936 the IRA was declared "an unlawful association", which sent the message to the IRA and the public that terrorism would not be tolerated and any activity associated with such a group would be regarded as illegal or as grounds for investigation by the police.[6] Still, the existing powers were insufficient in the battle against the IRA. Their activities continued, culminating in a bombing campaign in Coventry in 1939 which left five dead and sixty wounded.[7] With war on the horizon, the UK created the Offences Against the State Act 1939. IRA members were subject to arrest without warrant, imprisonment without trial, and regular searches of their homes and businesses.[8] Military tribunals were established to try IRA

prisoners, and the "constant harassment" of the judiciary, the military and the police served to drive the IRA underground for the duration of the war.[9] Facing pressure from the British, Eire acted in kind; since it was neutral in the war it had a vested interest in suppressing the IRA. The possibility existed that the UK could invade the South in order to protect the sea lanes and the all-important convoys from North America. The UK was satisfied, however, with retaining the North as a strategic naval patrol area, and troop levels served to keep IRA activities to a minimum.

After the war, the new Labour government proposed reforms to the education system, allowing for free higher education for Catholics as well as Protestants. For the latter, this reform was a direct assault on the perception of themselves as the privileged part of society and was interpreted as a threat to their social and political position; the last thing the Protestants wanted was an educated Catholic/nationalist minority challenging the authority of the Loyalist Protestants.[10] The education controversy served to exacerbate existing tensions, driving the wedge between the two political groupings even deeper.

The IRA proved a worthy adversary in spite of tough legislation and the relative absence of the media. In 1954, the IRA was credited with two attacks in two separate counties in Ulster, yet little attention was paid to these activities.[11] Subsequently, the IRA began a campaign of terrorism and guerrilla warfare throughout the North, but the combination of special powers for the police, judicial powers, internment and censorship served to quell the campaign, even though this process lasted from 1956-1962.[12] The IRA appeared to have been defeated, although the authorities should never have come to that conclusion given the past history of the Troubles.

This attitude or policy of benign neglect would carry a heavy price for the British in future years.

The IRA was certainly not the only illegal paramilitary organization in Ulster, then or now. The Loyalists created their own terrorist groups on the pretext of self-defence. When the Republicans staged a march in 1966 to celebrate the fiftieth anniversary of the Easter Uprising, the Protestants were infuriated. Under the leadership of 'Gusty' Spence, who feared that British negligence would result in a united Ireland, the Protestants formed the Ulster Volunteer Force (UVF) in 1966 to counter the nascent, tight community spirit of the Republicans.[13] If conflict erupted again under the flag of the IRA, the UVF would respond forcefully to make up for the inaction of Stormont and Westminster. Indeed, the UVF carried out its first terrorist act on April 16, 1966. There is little or no evidence to suggest the British government was the least bit concerned about this polarization into paramilitary organizations, nor is there any evidence of involvement in the area by the Special Branch (RUC) or the intelligence agencies. The formation of the UVF was clearly a warning that went unheeded by Great Britain, particularly significant in view of its position of ignorance regarding the IRA. The situation in Ulster would become uncontrollable because of this policy; without advance warning the British were unable to co-opt the growing militancy on both sides of the quarrel.

The paternalism of the Protestant majority in Ulster led directly to the formation on February 1, 1967, of the Northern Ireland Civil Rights Association (NICRA), which was established to gain electoral reform and to change discriminatory practices in hiring and public housing.[14] Modelled to some degree after the procedures of Martin Luther King Jr. in the

United States, the organization sought change without violence, although the Loyalists were suspicious of this claim. Their fears became justified, as NICRA was penetrated by both the Trotskyist International Group of London and the Marxist Official IRA.[15] It appeared that NICRA was merely a front for communists and thus represented a threat to the Loyalists, who were both staidly conservative in social matters and unwavering in their dedication to the Monarchy. The threat to the Loyalists was increasing: the paramilitaries were in the process of being formed; marches, demonstrations and riots began to occur; the security forces were unable to cope with the rise in street violence. Public order was dissolving rapidly, and each side in the dispute looked to their paramilitary associations to protect them from the other party or to avenge the other's activities. Inexplicably, there was little action from Stormont, and nothing at all from Westminster. The policy of benign neglect was now showing results with the deaths and injuries of Ulster's citizens, and there was little or no intelligence to use in strategic threat assessments. Despite violence in the streets and rising tensions, by 1968 London "responded lethargically", preferring instead to let the police in Ulster handle the problem.[16] Terrorism was already establishing itself in Europe, largely a result of Vietnam, the Six Day War, student radicalism, and a subsequent disrespect for authority. In the process of attempting to remain isolated from these outbreaks of terrorism, or perhaps due to complete denial, terrorism and the breakdown of public order took Great Britain almost completely by surprise.

The Modern Age Begins: 1969-1972

The attitude, if not the policy, of successive British governments since the 1920s was to "let sleeping dogs lie".[17] This was particularly applicable to the Irish Question, but had ramifications beyond that region. Western Europe was under some strain at the time from the early vestiges of revolutionary violence by student radicals, aircraft seizures by a variety of groups, and occasional outbursts of attention-seeking Palestinians, who had decided to use Europe's openness for publicity, surrogate warfare and revenge. Inexplicably, Great Britain considered terrorism to be a problem for others,[18] despite growing violent activities in Ireland and the occasional bombing in England or Scotland by the Angry Brigades. Only when the latter began to destroy British property were some countermeasures instituted; it represented the earliest vestiges of the British response to terrorism, but did not demonstrate the existence of a coherent policy. By this time, however, public order was deteriorating rapidly in Ulster and the British were forced to respond.

The year 1969 was a banner year for the beginnings of IRA terrorism and for demonstrating that the British government, along with Stormont, had little information on what was happening and virtually no plan of action. The Royal Ulster Constabulary (RUC) and the Ulster Special Constabulary (B-Specials) were the primary response units, and the British sent in a small contingent of troops for the purpose of defending certain installations. Still, the British were hesitant to become involved in the rioting or the counterterrorist operations in Ulster, preferring to leave that role for the local police. This highly cautious approach allowed the situation to become worse, and it would not be long until the British would

have to assume primary responsibility for counterterrorism and public order.

The greatest problem at the time was the lack of intelligence regarding the overall political conditions in Ulster and the activities of the IRA. The RUC had merely 3000 staff[19], which was hardly enough to blanket the area in any concerted effort to gain low-level intelligence on potentially violent individuals and the organizations to which they belonged. By April 1969, the IRA became more organized and proceeded to undercut the authority of the police, who were largely blamed for failing to prevent Protestant attacks on Catholics. The IRA succeeded in forming 'No-Go' areas, effectively throwing the police out of select Catholic areas; they became, in effect, the only authority in some neighbourhoods. The No-Go areas of Andersonstown, Bogside and Creggan "was seen [sic] by the Protestants as a direct challenge to their majority in the Province"[20], and tempers began to boil over. By August 1969, the rioting in Ulster was not only frequent, but the groups were large and out of control. The failure of British political leaders to task the intelligence agencies with gathering information in Ulster was now paying off. According to the Rt. Hon. James Callaghan, MP, who was the Home Secretary from 1967 to 1970, "At that stage we knew little enough at first hand about what was going on, and had few reliable means of finding out".[21] Westminster had "little or no concrete information" regarding the activities of the IRA and any possible countermeasures; there was only one senior civil servant in Ulster at the time.[22] The policy of benign neglect had failed.

The events of 1968 and 1969 did not go unnoticed in the Republic of Ireland. Charles Haughey and another member of the Dáil proposed

sending troops to the border, the establishment of field hospitals and refugee camps, training for Northern Irish Catholics in the army, and the possible intervention of Irish troops into the border regions.[23] The situation deteriorated to such a degree that the Irish Minister of Defence "began to draw up military contingency plans".[24] The British responded to the anarchical situation by deploying troops at 5:15 p.m. on August 14, 1969.[25] Total troop levels by mid-September reached 7500 men, placing the military into the role of colonial police.[26] The B-Specials were disbanded, the army established the Ulster Defence Regiment (UDR) under its direct control, and the Special Air Service (SAS) was introduced "for a few weeks".[27] It was now apparent that the British government was no longer willing to tolerate extreme civil disorder, and showed a willingness to confront terrorism directly. In this sense, counterterrorism policy had moved from benign neglect to the other extreme of using the military as the lead agency. The army would continue in this role longer than could have possibly been predicted.

The army had been deployed for the purposes of restoring public order, confronting the rise of the IRA, and quite possibly to discourage covert intervention from Eire. At the time, however, terrorism did not have the frequency or the large-scale lethality that it would have in the near future. Thus, public order could be regarded as the primary reason for the introduction of the military. Meanwhile, the problem of aerial piracy was becoming more serious, and it was apparent that Britain could not remain immune from this scourge. Leila Khaled, an infamous Palestinian terrorist, was placed in the custody of the British after the 1970 multiple hijacking to Dawson's Field, Jordan. Less than two months later, the PFLP

hijacked a British Airways VC-10 en route to London from Bahrain.[28] Khaled was released in accordance with the demands of the hijackers. Great Britain could not respond to the situation any other way, since there were small children on board the plane; a refusal to negotiate or capitulate would have been politically untenable. Nevertheless, the incident displayed that the UK had "a less than firm and uncompromising stand over hijack blackmail".[29] The release of Khaled by the British was, in fact, "in contravention of their own legal principles"[30], and demonstrated the point that the UK was not yet prepared to meet terrorist threats with the vigour they would eventually require in the process of developing an effective set of institutions for countering terrorism. The apex of this development would require several more years to become established and to point the way for other countries.

The most important development at the time regarding terrorism in the United Kingdom was, without a doubt, the split which occurred within the IRA. Dissatisfied with the more 'political' approach of the Marxist Official IRA, a group of individuals established the Provisional IRA in December 1969.[31] Casualties were not especially high under the régime of the OIRA -- some 15 people were killed by the terrorists in 1969.[32] PIRA wanted to pursue a different strategy; its members were less patient than the committed Marxists and would settle for nothing less than a united, socialist Ireland as soon as possible. That effectively required PIRA to become much more aggressive in its campaign to destroy British morale and drive them out of Ulster, and the casualty rate in the ensuing years would be horrible testament to their determination.[33] The British were under assault from many sources by the beginning of 1970. PIRA

surfaced on January 10, 1970 in Dublin[34], signalling a newer and bloodier campaign to follow. The Angry Brigade was bombing its way through Great Britain, although it would be disassembled in 1971. Terrorists were establishing themselves as serious threats in Germany, the Middle East, the United States, and Central America. In Ulster, the greatest single countermeasure for such activity was a series of incremental increases in the number of troops from 7500 in the fall of 1969 to some 13,000 by July 1970.[35] The British made occasional attempts to ameliorate complaints regarding civil rights, but "encountered intractable opposition from Stormont".[36] Public order remained unrestored, terrorism was on the rise, and British policy seemed locked in "a period of indecision".[37] To complicate matters, the British police held the attitude that "every Irishman was a terrorist", making relations between the two ethnic and religious groups somewhat tense in Great Britain itself.[38] The English eyed the Irish with great suspicion despite the fact that there was little or no evidence linking 'mainland' Irish with the Troubles. Fear and hatred guided policy on the ground as opposed to proper intelligence assessments and recruiting, and in spite of acceptable police conduct. The government had not yet communicated an effective policy to the police, nor was one in sight. Effectively the only line of defence in Great Britain, the police were forced to conduct counterterrorism on an *ad hoc* basis. It would not change much in the near future.

In 1971 the United Kingdom began serious attempts toward restoring order in Ulster as well as in Great Britain. The Immigration Act of 1971 slightly increased the power of immigration officers to exclude suspected terrorists from Great Britain; fears persisted that terrorists from the

Middle East were trying to establish the UK as a centre for subversive and violent activities.[39] Meanwhile, the Angry Brigade, a group of student anarchists, established notoriety by bombing a number of installations across northern England. The police came under some political pressure to effect some arrests, but a more pressing issue was at hand.[40] It was clear by now that the unarmed British police were ill-suited for antiterrorism, and that the threat of multiple explosions required an appropriate countermeasure.

The Bomb Squad was formed by the end of July 1971 and was placed under the control of Scotland Yard's Serious Crimes Squad.[41] Due to the increased capability of the police, the Angry Brigade "was virtually destroyed as a functioning entity by a series of arrests in 1971".[42] The result of their efforts to terrorize was threefold: First, the British began to make use of specialized units to carry out political objectives, as opposed to complete reliance on existing structures. This would be a harbinger of things to come. Second, the creation of the Bomb Squad signalled a greater interest in terrorism by the political masters and the police. Third, "their most significant achievement was to convince the police of the need to concentrate research on terrorism".[43] Eight terrorists were arrested and four convicted; their efforts had not only been counterproductive, but had demonstrated an unwillingness of the government to allow such activities. Serious efforts at counterterrorism were beginning in earnest.

The conflict in Ulster was not nearing any solution, despite attempts by the British to reform Parliament in order to give greater representation to the Catholic Irish. Bombings and shootings occurred with regular

frequency, and civil order was no nearer at hand than it had been at any other time. On February 1, 1971, the first British soldier was killed by a terrorist.[44] The army and the police began to change tactics. The army established the Military Reconnaissance Force (MRF) in 1971, tasked with both rural and urban deep-cover operations.[45] The SAS helped the RUC develop a specialized unit, E4A, which gained the same tactics and capabilities as the SAS. The British tasked both MI5 (BSS) and MI6 (SIS) to operate in Ulster, although the latter is normally forbidden from participating in internal activities.[46] The UK was now demonstrating a greater interest in the establishment of effective intelligence-gathering units as well as nurturing a greater role for covert activities in Northern Ireland. With the reconstruction of the RUC, the use of the RUC Special Branch, the establishment of E4A and the MRF, and the deployment of the traditional intelligence agencies, Great Britain's Tory government was changing its policy from benign neglect to active intervention with non-traditional means.

Unfortunately, the Special Branch had a habit of tagging its files "For UK Eyes Only",[47] liaison between the intelligence agencies was "poor"[48], and the police and army jealously guarded their information. This effectively cancelled many positive effects which could have been achieved as a result of the sharp increase in attention paid to intelligence. Added to that problem, the OIRA was able to tap a teleprinter line linking army headquarters with tactical headquarters; they were apparently "able to read the plain language daily intelligence summaries and also battalion commanders' requests for permission to raid specific houses".[49] The British seriously underestimated the capabilities of their adversaries.

The increased attention to intelligence-gathering did not come in time to prevent any increase in violent activities. From January to July 1971 there were some 304 bombings.[50] On March 12, 1971, over 5,000 people from both the Catholic and Protestant communities marched in the streets, demanding stronger countermeasures to IRA activities. A resolution was handed to the Ulster Unionist Party, which stated:

> We, the engineering workers of Harland and Wolff, composed of all shades of political and religious beliefs, call on the Northern Ireland Government to immediately arrest and intern all known members of the Republican Army. In our opinion if this is not done at once we could well be facing further murders and outrages. . . [51]

Minor concessions were made to the Catholic community, parades were prohibited, and greater control was sought over the sale and possession of weapons and explosives.[52] Brian Faulkner, the Prime Minister of Northern Ireland, suggested that the IRA had sanctuaries and unofficial support from the Republic of Ireland, and furthermore "claimed that 85 per cent of [their] weapons came from Eire".[53] There were twenty bombings between August 1 and August 8, 1971, and yet another Protestant paramilitary organization was established -- the Ulster Defence Association (UDA).[54] The possibility of full-scale civil war could not be ruled out, and Faulkner concluded that serious countermeasures would have to be implemented immediately.

The violence in Ulster required more than the establishment of special units, especially since they appeared on the scene so late. On August 5, 1971, Faulkner met with Prime Minister Heath and discussed the implementation of the Civil Authorities (Special Powers) Act 1922 in order to quell the violence in Ulster.[55] On August 9, 1971, Faulkner announced the reinstatement of the Special Powers Act:

> Every means has been tried to make terrorists amenable to the law. Nor have such methods been without success, because a substantial number of the most prominent leaders of the IRA are now serving ordinary prison sentences. But the terrorist campaign continues at an unacceptable level, and I have had to conclude that the ordinary law cannot deal comprehensively or quickly enough with such ruthless viciousness.[56]

Section 10 of the Act authorized the RUC to detain any person for up to 48 hours "for the purpose of interrogation"; Section 11 allowed arrests without warrant based merely on suspicion and the possession of an "article, book, letter, or other document" which might lead a police officer to suspect any given person of being a member or supporter of a terrorist group.[57]

The security forces received vastly strengthened powers under Section 11(1):

> Any person authorised for the purpose by the Civil Authority . . . may arrest without warrant any person whom he suspects of acting or of having acted or of being about to act in a manner prejudicial to the preservation of the peace or maintenance of order . . . [58]

There was no provision requiring suspicion to be 'reasonable', as required under normal British Common Law. Furthermore, a provision was added to accommodate the perceived need for detention beyond normal criminal proceedings:

> Any person so arrested may, on the order of the Civil Authority, be detained either in any of Her Majesty's prisons or elsewhere, as may be specified in the order, upon such conditions as the Civil Authority may direct, until he has been discharged by direction of the Attorney General or is brought before a Court of Summary Jurisdiction.[59]

The Special Powers Act marked a dramatic change in the British approach to civil conflict in Ulster. Approved by Westminster, it was apparent that there was more interest in suppressing the conflict. The combination of special legislation, increased concentration on intelligence, and the creation

and use of specialized police and military units laid the groundwork for future counterterrorist efforts by Britain.

The problem of terrorism would reach epidemic proportions in 1972, and some events suggested there was still no concrete policy in place, although stricter countermeasures were being established. PIRA had moved into the taxi business, creating a source of funding through extortion and quasi-legal business ventures which allowed them to purchase more weapons and place more members on the payroll.[60] Some 300 buses were destroyed, costing the taxpayers about £10 million.[61] PIRA showed its intention to cause economic damage as well as fear and death. During the course of the year there would be 10,630 shootings and 1382 bombings, reflecting the absolute chaos of the environment.[62] The British would eventually be forced to respond with greater intensity.

One event in 1972 did more to affect the process of politics and counterterrorism than could have been imagined. PIRA was becoming much deadlier than before and the security forces were placed in a much more difficult and tense position. On January 30, yet another riot occurred, with troops called in to assist in crowd control. The troops opened fire on the crowd, killing 13 and wounding scores of others.[63] The Republic of Ireland recalled its ambassador to London, and the British embassy in Dublin was burned to the ground while Irish police and firefighters stood back and watched. The event "produced such a degeneration in security that Westminster instituted direct rule of Northern Ireland in March".[64]

The shooting inspired further acts of terrorism. On February 22, 1972, the OIRA bombed the officers' mess at Aldershot, killing seven.[65] The constant action/reaction of violence had reached a peak, and "the

stage was set" for the Prevention of Terrorism Act, which would be introduced in another year and a half.[66] The UK was clearly well on its way to another step up the ladder toward the full development of a comprehensive counterterrorism program.

The worsening situation in Ulster prompted the British to assume legal control of all matters relating to Northern Ireland in March 1972. Prime Minister Faulkner had resisted attempts by the British to improve security and social balance, so Stormont was dissolved. Westminster was now placing itself in the most active role possible by assuming all legislative and security functions in Ulster. In the meantime, terrorist incidents increased in frequency, and an alarming trend was discovered. On March 28, 1972, after shadowing the cargo ship S.S. *Claudia* from Tripoli, the Royal Navy instructed the Irish Navy to inspect the contents of the ship. On board were five tons of armaments, including SA-7 missiles, all provided courtesy of Col. Qaddafi of Libya.[67] The event signalled a broadening of the conflict to include outside powers, which would bedevil British efforts to control the IRA.

The dissolution of Stormont and the assumption of all functions of government and security by the British resulted in a temporary period of confusion of aims in counterterrorism policy. From active involvement and a desire not to placate the IRA, the British briefly wavered from the hard line policy. The army was ordered into a position of "low profile"[68], causing the flow of intelligence into the hands of the security forces to be practically eliminated.[69] IRA prisoners under orders of internment were effectively granted political prisoner status, which only served to legitimize their existence as a fighting unit and not a band of criminals.[70] The 'H-

Blocks', as the groups of Nissen huts were called, served to encourage communication between terrorists to the point where they became the greatest source of terrorist education in Ulster.[71] The frequency of terrorist incidents nearly doubled from March to April,[72] signalling that the scaling back of the military in security operations was a serious mistake. The problem would become worse.

The post of Secretary of State for Northern Ireland was created by the resumption of Direct Rule in March, and the first to hold the position was William Whitelaw. Tasked with the responsibility for all Northern Irish affairs, Whitelaw assisted in demonstrating the confusion in British policy at the time. In April and May, Whitelaw released a number of terrorists from internment, including Gerry Adams, one of the leaders of PIRA. Many of those released immediately returned to their respective terrorist groups armed with greater knowledge of the business of violence.[73] Policy changed from 'hard line' to 'negotiations'. Adams had been released as a precondition to hold talks with the IRA, and an RAF plane was placed at their disposal.[74] Secret talks with the IRA were held between June 26 and July 9, while the IRA declared a temporary ceasefire.[75] The talks ultimately failed and the IRA had the time to gather its strength. Terrorism resumed with greater vigour than before.

While British policy was in a state of flux and specific security measures were being reassessed, the frequency of terrorist acts and casualties both began to increase. In March 1972, there were 535 shootings and bombings (the two most common types of attacks); the figure increased to 829 in April; 1317 in May; 1332 in June; 2962 in July.[76] In total there were nearly 4300 terrorist incidents by shooting and bombing alone since

the resumption of Direct Rule. This dramatic increase in terrorist activity was attributable to two causes. First, the reduction in activity by the army as ordered by the new government contributed to an increase in the ability of the IRA to reassemble its forces, recruit more members, and gather more weapons. Essentially, the time given to them was put to good use. Second, fluctuations during this time in British policy served to give the IRA a boost in morale since they could have interpreted a lack of resolve on the part of the British as a sign of weakness which required exploitation. The IRA thought it was close to realizing its dream of troop withdrawal by taking advantage of an apparently weak government. That situation would not last.

With the failure of talks with the IRA and a generally deteriorating security situation, Great Britain began to regain its former hard line and laid the foundation for security policy in the future. On July 21, 1972, otherwise known as Bloody Friday, the IRA detonated twenty bombs in Belfast alone, killing nine civilians and inflicting more than 130 casualties.[77] The incident gave an extra boost to public revulsion at the IRA and its activities and gave the British a much needed opportunity to re-establish their credibility regarding security. In response, the British increased the number of troops in Ulster from about 16,000 at the beginning of summer to 21,800 by the end of July.[78] On July 31, 1972, the army launched 'Operation Motorman', which was designed to partially smash the foothold that had been established and held by the IRA in key areas. The 'No-Go' areas in Bogside, Andersonstown, and Creggan were dismantled by force of arms by an army trained in counterinsurgency and urban warfare.[79] The operation was designed to increase the credibility

of British forces in security matters at the expense of the IRA. Additionally, the presence of a legal armed force served to drive a wedge between the local population and the recruitment efforts of the terrorists. Furthermore, a number of arrests of the top leadership of the IRA, combined with the flight of many others to the Republic, served to produce an immediate demonstration of the capacity of the security forces to dismantle IRA operations. From a figure of 2962 shootings and bombings in July, the comparatively small number of 766 was recorded in August and the latter figure stayed relatively constant well into the following year.[80]

While the situation in Ulster stabilized to some degree, other events in the UK and elsewhere served to assist the British government in the formulation of policy and specialized units. On September 9, 1972 the Israeli Consul to London was assassinated.[81] This was followed by two waves of letter bombs, which were both intercepted by British intelligence. The first wave, consisting of some 40 bombs, was mailed from Amsterdam; the second batch was mailed from Malaysia. The UK was experiencing a virtual state of war in Northern Ireland as well as the effects of international terrorism, and they would have to prepare themselves for the onslaught.

There is no other incident in the history of counterterrorism quite like the fallout after the Munich Olympics of 1972. The Israeli Olympic team had been taken hostage by the Black September Organization with assistance from the Red Army Faction. When the Bavarian police botched an attempt at intervention after refusing an Israeli offer to rescue the hostages, the resulting deaths of all the hostages shocked the world. No other incident to this point did more to give a number of countries a

collective slap in the face. It was now apparent that regular police forces were unable to carry out a firefight with a band of terrorists; special units were clearly required. The embarrassment and shock experienced by the Germans would cause their own structures to change, but in the UK this translated into an immediate authorization by Prime Minister Heath to create a special unit within the SAS called the Counter-Revolutionary Warfare unit, or CRW.[82] Other changes would follow.

The Special Patrol Group (SPG), which was originally established in 1965 as a rapid-reaction police backup unit, was changed to round-the-clock operations in October 1972.[83] Tasked with counterterrorism, narcotics raids, and other serious crimes, the SPG had 200 officers in six separate units, some of which were armed. An SPG unit, comprised of 300 men, was established in Ulster later in the fall.[84] The Civil Contingencies Unit, or CCU, was established as an advisory body to keep senior officials informed of serious threats to public order from terrorism. The creation of specialized agencies to deal with terrorism had begun in earnest.

The problem in Ulster had deteriorated from bad to worse. The army was able to reduce, but not eliminate, the threat of terrorism. The British embarked on a quest for a new legal structure in Northern Ireland so that the process of counterterrorism could have the appearance and credibility in accordance with the rule of law. Judge Diplock was sent to Ulster to assess the existing legal machinery and reported his findings in December of 1972. By this point the intimidation of jurors, judges, magistrates and the general public had become so endemic that "the process of law became unworkable", despite previous emergency legislation.[85]

Judge Diplock's main recommendations concerned the intimidation and

fear caused by terrorism and how to create a court system less susceptible to this pressure.[86] Diplock recommended that there be some effort to reduce the practice of the executive power of detention where possible and replace it with greater powers for the judiciary, provided the level of intimidation could be reduced at the same time. Terrorist crimes were to be placed in a separate category from regular crimes by referring to them as Scheduled Offences; the difference between the two typologies would be dictated by the intended result of the criminal act and would be included in any new statute, subject to the interpretation of the goal of the crime by a police officer, member of Her Majesty's Armed Forces, or a judge. All scheduled offences were recommended to be tried without jury. The armed forces were recommended to receive partial police powers of arrest and detention of suspected terrorists for up to four hours. The onus of proof regarding the possession of firearms and explosives was to be reversed, requiring the terrorist suspect to prove to the court that he or she had no knowledge of the existence of such materials. Diplock further recommended that confessions should be admissible for scheduled offences except in cases where the confession was made under conditions of torture. Signed statements could be accepted as evidence before the court in place of individual representation where that individual would not or could not appear before the court, due to either death, incapacitation, or fear.

By the end of 1972 Diplock had noted the unworkable system of law in Northern Ireland and the existence of a number of terrorist groups in spite of the fact that both wings of the IRA and the Ulster Volunteer Force (UVF) had been banned. The policy of detention had not succeeded in Diplock's eyes, but rather than dispense with the procedure he

recommended modifications. Detention would still be allowed but the court would be the final guarantor of the rule of law and would attempt to ensure that no innocent civilians were detained on a semi-permanent basis. According to Diplock,

> We think that it is justifiable to take the risk that occasionally a person who takes no part in terrorist activity and has no special knowledge about terrorist organizations should be detained for such a short time [a week] . . . rather than that guilty men should escape justice because of technical rules about arrest.[87]

Diplock's report was an attempt to provide the authorities with the tools with which to combat terrorism, while attempting to maintain a democratic balance for those not involved in terrorism. The recommendations were a clear message to the public that terrorism would not be tolerated, and a clear message to the terrorists that they could not defeat the British outside accepted legal conventions. The recommendations set the stage for counterterrorism policy for the future. The British recognized that a combination of specialized units in the police and the military, along with judicial reform and better intelligence, would be the best basis for the development of counterterrorism for decades to come.

Establishing the Framework: 1973-1974

By the end of 1972 there were a number of modifications regarding the threat of terrorism. The OIRA had ceased operations[88] other than political agitation, PIRA had shown itself to be remarkably resilient despite the massive efforts of Operation Motorman, and international terrorism increased in intensity and shock value throughout Europe. The British became aware that a three-tiered strategy was required to retain control over the threat of terrorism, including political activities to deflate the

crisis and reduce the recruitment base for terrorists, stringent and intensive security efforts through special units, and legal reforms. This plan of action gradually evolved after the Diplock Report was accepted and continued to the end of 1974. The intelligence services clearly knew that the IRA would present a threat to security which would have to be dealt with quickly and efficiently. However, the British Treasury was unwilling to expand the role and resources of BSS (MI5) in order for them to provide countermeasures against both the IRA and Soviet espionage activities.[89] A proposal was made to intercept communications between IRA camps in western Ireland and Dublin using the British Embassy as a reception point. This proposal was overruled by the Foreign Office, as was a plan to tinker with IRA detonators. The possibility of a scandal resulting from public disclosure of intelligence-gathering by communications interceptions was inexplicably regarded as a greater risk than what might have been gained by such activities, and the notion of boobytrapping detonators was regarded by senior BSS officials as an untenable option given the low regard for intelligence at the time.[90] The intelligence services were thus not used to the extent they could have been under stronger leadership and with greater confidence shown by their political masters.

The IRA had certainly not been decimated by Operation Motorman, although there was a marked decline in the frequency of their operations. From a peak of 2778 shootings and 184 bombings in July 1972, the figures declined in August to 640 shootings and 126 bombings.[91] This level of activity remained reasonably constant well into 1973. Official estimates of IRA strength at the time usually hovered between 1000 and 1200

members.[92] In fact, IRA strength was almost certainly much greater; between March 1972 and April 1973, 967 terrorists were killed or wounded and a further 5150 were captured, for a total of 6117 put out of action during that year.[93] IRA activities did not decrease despite these heavy losses, suggesting repeated underestimation of IRA strength. It would prove difficult for the authorities to control terrorism when operating with such estimates.

The authorities moved in 1973 to begin the process of transforming the conflict from what appeared to be a counterinsurgency campaign to using the rule of law under exceptional circumstances. The RUC was strengthened in manpower levels and the number of troops in Ulster declined to 16,500 by June 1973.[94] The British government began to reform the process of criminal law to make it fit the special circumstances in Ulster, while attempting to maintain as many traditions as possible according to regular common law. The process of establishing a concrete framework for counterterrorism began.

The Northern Ireland (Emergency Provisions) Act received Royal Assent on July 25, 1973 and came into force on August 8, 1973.[95] Most of the recommendations made by Lord Diplock were incorporated into the new Act, as were a number of provisions from the Special Powers Act.[96] The latter had been a major irritant for the Northern Ireland Civil Rights Association (NICRA), so the Emergency Provisions Act can be seen as an attempt by the British government to ameliorate the concerns of activists, remove support for the IRA, yet still retain extensive powers for the police and the military. Six terrorist groups were proscribed, including the IRA and the UVF.[97] Membership, dressing in a manner suggesting membership

or expressing sympathy with a proscribed organization all became scheduled offences.[98] Additionally, trials for scheduled offences now involved a single judge without jury; powers of search, entry, arrest, the seizure of property, and detention were increased.[99] The police were given the authority to arrest on the suspicion, rather than reasonable suspicion, that a person might be a member of a proscribed organization and could hold that person without warrant for 72 hours. Photographs and fingerprints could be taken even if no charge were laid, and force could be used to accomplish those objectives.[100] Written confessions were allowed by the courts. The military was thrust into the position of a reserve police force and were given the power to detain on their own suspicion any person suspected of having committed, being about to commit or in the process of committing a criminal act which could be counted as a scheduled offence. The Secretary of State for Northern Ireland retained the power to detain suspected terrorists indefinitely.[101] The accused could no longer maintain silence during questioning or in legal proceedings without sanction; the principle of reverse onus was established regarding the possession of firearms or explosives, requiring the accused to prove he had no knowledge of the existence of such proscribed articles; and any member of the security forces could stop any person and question him to determine his identity, movements, and any knowledge he might have of a proscribed organization. The Secretary of State had the power to seize any land, buildings, or any other property. It became illegal to withhold information about proscribed organizations, to gather information about the security forces for the purpose of giving that information to a terrorist group, or to engage in any form of intelligence gathering for a proscribed

organization.[102]

Most importantly, the new Act required the British government to make a legal working definition of terrorism for the first time. Terrorism was defined as "the use of violence for political ends and includes any use of violence for the purpose of putting the public or any section of the public in fear".[103] A terrorist was defined as "a person who is or has been concerned in the commission or attempted commission of any act of terrorism or in directing, organising, or training persons for the purpose of terrorism".[104] The combination of expanded powers under a legal framework, along with a definition of the problem, gave the authorities a solid and semi-permanent basis for counterterrorism in law.[105] The Act would remain largely unchanged for nearly two decades.

The situation in Ulster was complicated in the Spring of 1973 by the emergence of two new terrorist groups, the Red Hand Commando and the Ulster Freedom Fighters (UFF),[106] both of which would be outlawed by the end of the year.[107] Bombs were detonated at the Old Bailey and Scotland Yard on March 8, signalling a shift in the conflict to the mainland of Great Britain.[108] On a single day that month, 250 people in England were injured by terrorist bombs.[109] The terrorist campaign had broadened, yet this very spread of terrorism "took the authorities off guard", thus displaying a weakness in their intelligence efforts.[110] The terrorist campaign would once again lead to unintended consequences, as the British government began to draft the Prevention of Terrorism (Temporary Provisions) Act.[111] The efforts by terrorists would be rewarded by stringent measures against them, and would strengthen Great Britain's resolve not to concede to violence.

The creation of the Emergency Provisions Act in 1973 was the legal measure needed for the rule of law to be observed while giving the security forces better tools with which to defeat or contain terrorism. The creation, over a relatively short period of time, of specialized units such as the SPG (Special Patrol Group), MRF (Military Reconnaissance Force), E4A (the RUC's version of the SAS), and MSU (Mobile Support Unit) in Ulster represented the willingness and need by the authorities to utilize special covert units. These two tracks formed the core of counterterrorism and demonstrated the political will required for a hard-line security policy. Separate from these arrangements and structures were political 'carrots', such as the Sunningdale negotiations on a new Parliament for Northern Ireland.

The quest for a political solution had not ceased, despite the appearance of stricter security and some degree of success by the combination of legal reform and special units. The Heath government proposed a set of discussions regarding the parliamentary status of Northern Ireland on March 20, 1973, with participation from all interested Northern political parties as well as the government of Eire.[112] The new Parliament was to have 80 seats and the Catholic minority would have equal representation in the executive branch. Talks were held in August and September in Belfast and Dublin, respectively, and a larger conference was held at Sunningdale between December 6 and 9, 1973. Agreement was found, and it seemed that the political solution so long sought was at hand. However, the representatives, including the British, miscalculated the willingness of the Protestants to fight and the agreement collapsed shortly thereafter as a direct result of Protestant anger.[113] The Protestants

were unwilling to submit to an agreement that appeared to appease the nationalist community, and a good chance for negotiations would not occur for another twenty years. Counterterrorism would largely be in the domain of the police, the courts and the military.

Terrorist activities did not disappear as a result of the Emergency Provisions Act, and may have been broadened as a result thereof. The IRA changed its pattern of activities on the mainland to include the use of 'sleepers', who would be called upon to perform outrages at the request of the commanding élite, and the internal structure of the IRA shifted to cellular formations, much like their revolutionary cousins in West Germany, and thanks to better British security procedures. Meanwhile, the Tories under Heath were defeated by the Labour party, and the latter would oversee the expansion of counterterrorism on the mainland to supplement efforts in Ulster.

The threat of terrorism came from all sides in the UK. The IRA was becoming more sophisticated and had certainly proved its tenacity.[114] Loyalist groups were showing themselves as very strong in numbers and were thus not helping the security situation at all, except that they avoided attacking the British.[115] Foreign terrorists accentuated the problems faced by the government, attacking or threatening to attack points of value to the British. In January 1974 the army had to be called to Heathrow to defend against a threat of an SA-7 attack there made by a Palestinian group.[116] The PLO and its subsidiaries were expanding rapidly across Europe, and a running battle was being fought on European soil between terrorist groups from the Middle East, Israeli intelligence, and the security services of all European governments. Between 1971 and the

end of 1973 there were 98 illegal seizures of aircraft and 68 attempted seizures, demonstrating the lack of security for air travel and yet another threat to national security for the UK.[117] In those incidents, 419 civilians were killed and another 214 wounded. Great Britain, among others, was literally swamped with terrorism. Stricter measures were required immediately.

The political efforts of the Heath government unravelled in May of 1974 when Loyalists struck to end the perceived threat of greater Catholic power.[118] Sunningdale had been a failure, and terrorism had not declined. Between March 1973 and March 1974, some 130 bombs exploded in mainland Great Britain.[119] Still, little was done to curb terrorist activities other than the regular process of law; the UK was in no hurry to implement drastic action.

The only measures to deal with terrorism other than those already in effect were introduced in the summer of 1974 and dealt with developments in Ulster alone. The Secretary of State for Northern Ireland introduced the Northern Ireland (Young Persons) Bill on June 25, 1974, which called for the placement of young terrorists in adult prisons as opposed to youth centres.[120] While the Bill certainly appeared to demonstrate a hard line regarding overall policy, it is almost certain that the young terrorists received valuable training and indoctrination from their older cellmates. The Bill appears to have been an act of desperation, not clearly thought through by the British.

The second effort made to quell terrorism reflected a major school of thought in the area of countermeasures: remove the social causes of angst and terrorism will cease to have a constituency, and will thus

disappear. On July 9, 1974 the government announced a policy of "phased release of detainees"[121], which had ambitious objectives. First, since the policy of detention had not succeeded it was thought that an olive branch could be extended to the IRA and some of the more radical Loyalists. Terrorists would hopefully cease operations because the government was showing a willingness to eliminate a source of anger for nationalists. This 'phased release' program, called "Take Home a Terrorist"[122], included job assistance, training and other social benefits designed to undercut the motivation for individuals to join terrorist groups. The plans both failed, as there is no evidence to suggest that they ever prevented the larger phenomenon; indeed, it would seem that the Young Persons Bill worked at cross-purposes with the wider social benefits, thus negating any positive outcome. Also, little has been learned to demonstrate the likely abuses of the greater social benefits: it is likely that they were used without any renunciation in terrorist activity. No strategic plan was in place to find solutions for this ancient problem, and it seemed that the new government was incapable of effective countermeasures. That perception would change rapidly thanks to the IRA.

Successive governments had, by the middle of 1974, instituted a three-tiered approach to counterterrorism, including special police, military and intelligence units; political action in the form of social attention; and legal changes which emphasized the criminal approach to policy, although special powers were the major thrust of legislation. Still, the threat of terrorism had not diminished substantially. The IRA was expanding its operations in England, foreign groups were operating while the police were helpless to stop them, and foreign governments began using diplomatic

cover as a means of hiding their own terrorist connections and activities. British counterterrorism policy was in need of substantial change.

On November 19, 1974, the IRA's Chief of Staff, David O'Connell, publicly warned that there was a will and a capability to increase the frequency and ferocity of IRA activities in Great Britain.[123] Two days later, two large bombs exploded at two pubs in Birmingham, killing 21 and wounding scores of others.[124] The Birmingham pub bombings had been something of an intelligence failure. An IRA cell (Active Service Unit) had entered London in August, had established their cover in Birmingham soon after, but had been arrested by the police before the end of that summer. However, the leader of the unit survived the police dragnet and reconstructed another cell. The police, the Special Branch and BSS were unaware of this, and the intelligence gap resulted in 21 deaths and 162 injuries.[125]

The shock power of the bombings was devastating to the UK and gave the government the courage and the opportunity to react swiftly and forcefully. Lord Shackleton, who had been working on the Prevention of Terrorism Act, said "Basic civil liberties include the rights to stay alive and go about one's business without fear".[126] On November 29, 1974, the Prevention of Terrorism (Temporary Provisions) Act passed into law, thus signalling Great Britain's resolve to meet the terrorists with strong countermeasures. The Prevention of Terrorism Act (PTA) was followed by a host of developments in the area of the creation of special antiterrorist units. The combination of these displayed Great Britain's diminishing patience with terrorists, both from foreign sources and from within the country. The developments at this time would set the tone for

counterterrorism for the next two decades, and marked a shift in policy toward antiterrorist units and legal changes as the basis for the enforcement of the rule of law. Still, flexibility in the political action sphere could be noted, suggesting that the British had not yet completed their policy transition from 'neglect' to 'no concessions'.

The PTA defined terrorism in the identical fashion and wording as the Emergency Provisions Act, concentrating on the aspect of the creation of fear from terrorist-type attacks.[127] The PTA provided the special legislation required by the authorities for antiterrorism in Great Britain, and extended its authority to matters in Ulster and potential threats from other external sources. Basically, the PTA increased police powers to investigate, interrogate and place suspected terrorists in temporary detention; gave the Home Secretary broadened executive powers to exclude certain people from the UK altogether; provided the necessary guidelines for various government bodies to conduct searches and surveillance operations; and set the overall framework for counterterrorism within the law.

According to the provisions of the PTA, which was similar in many respects to the Emergency Provisions Act, membership, a claim of membership, solicitation of funds, and meetings related to proscribed organizations were designated as scheduled offences.[128] Money and property belonging to a person convicted of a scheduled offence could be seized. Articles of clothing, including dark glasses, berets, and the like could be construed as lending support to a proscribed organization. The Secretary of State could issue exclusion orders against virtually anyone merely on the grounds of suspicion; 'reasonable' suspicion was not

required at this juncture because the executive needed the power to exclude people without necessarily proving their guilt by association in court, thus allowing for the use of intelligence in making such decisions. A provision was made to include mere suspicion regarding terrorists from areas other than Ulster and unrelated to that particular conflict.

Furthermore, the Act allowed constables to make arrests and detain suspected terrorists for up to 48 hours, and could extend that period of detention for another five days without the normal requirement of legal representation. Photographs and fingerprints could be taken without consent or charge, but merely on the suspicion of involvement with terrorism, either in the UK or abroad. The IRA was proscribed in the initial Act of 1974, and the Home Secretary was given the approval to add or delete others as required. The PTA of 1974 and the Emergency Provisions Act of 1973 demonstrated the two most important steps in the British response to terrorism with respect to special legislation and police powers. They served to demonstrate the first half of the two-part strategy used by the British against the terrorists.

The IRA campaign in Ulster had resulted in such countermeasures as legal changes and the creation of special units to fight the problem. The IRA's shift to mainland Great Britain resulted in the same response, although some of the measures the UK undertook were designed to combat foreign terrorists as well. The creation of special units represented the maturation of British policy, as normal police units were incapable of coping with exceptional threats to security. The British had slowly come to realize that they needed to reform their structures in order to meet the threat, and hardened their stance with a display of a variety of practical

measures designed specifically to deal with terrorists.

Changes were made at the executive level by the end of 1974 which showed a significant increase in the interest toward terrorism by the highest levels of power in the UK. The Cabinet Office Briefing Room (COBRA) was set up as a command platform in the event of extended emergency situations. The Civil Contingencies Unit (CCU) was to keep COBRA informed of any serious threats.[129] The Joint Intelligence Organization (JIO) and the Joint Intelligence Committee (JIC) were tasked with providing guidance on terrorist-related matters in addition to their more traditional roles within the executive branch. The Ministerial Committee on Intelligence and Security (MIS) was formed to provide a research and analytical perspective to the Prime Minister's Office. The Management Services Department (MSD) was created as an independent research department, providing summaries and conclusions to relevant senior departments and committees. Finally, to round off the executive branch of counterterrorism, the Joint Operations Centre (JOC) was tasked with providing a command post for the appropriate military response units, particularly the SAS, after COBRA would approve an operation.[130] Each of these committees could receive, collate, analyze and disseminate information from their own sources, which were largely open sources, the police, the military, SIS, BSS, and perhaps occasionally GCHQ. From a purely structural perspective, the British were now taking terrorism very seriously.

The executive branch was not the only beneficiary of the policy shift of 1974. At the operational level there were several additions to note. The Special Patrol Group (SPG), which had a previous role in riot control and

reinforcement, expanded to concentrate on the latter in appropriate circumstances. The Royalty Protection Group (RPG) received greater weaponry and training.[131] The Serious Crimes Squad (SCS) of the Metropolitan Police had control of the Bomb Squad since 1971, and maintained this role.[132] The Central London Patrol was replaced with the Diplomatic Protection Group (DPG), which was assigned to patrol embassies in the Kensington district.[133] The SAS was confirmed as the lead military operational group, although that role had been in place for several years. The group A11 was established to provide surveillance of terrorists or suspects for the police. D11, with 40 men, was created for a rapid-reaction sniping team. C7, or the Technical Support Branch, was created to experiment with the electronic wizardry needed for sophisticated and effective counterterrorist operations.[134] The Atomic Energy Authority was given permission to establish a 15,000-man special constabulary, many of them armed, for the purpose of defending nuclear installations. To round off the operational and protective side, another 14 non-commercial private police forces were added to the role of defensive counterterrorism.

The British had taken some six years to develop their mature counterterrorist structure to complement their policy goal of 'no concessions'. The latter, it was understood, could not be realistically enforced without the former. The proliferation of special units marked a shift toward the capability of creating a truly 'hard-line' policy. The formation of specialized committees at the executive level served to reinforce the efforts of firmness in the face of terrorism and established a command structure for reactive and preventive police, military and intelligence efforts against terrorists. These developments, combined with

extraordinary criminal legislation, brought the British to the forefront of counterterrorism in the early to mid-1970s and remained the general basis for future response mechanisms. From a state with no policy at all, Great Britain demonstrated the phenomenon of comprehensive reform of all levels of government, from the executive to the judiciary to the street level, which showed the unique character of counterterrorism. Only one problem existed: the terrorists were becoming more sophisticated as well, perhaps as a direct result of Great Britain's efforts. The struggle would continue.

The security forces had been quite busy in Ulster in 1974, searching 71,914 houses, collecting 1260 illegal weapons and seizing 26,120 pounds of explosives in that province alone.[135] From 1970 to December 1, 1974, there had been 5098 weapons, 713,000 rounds of ammunition, and 75.8 tons of explosives captured by the security forces.[136] Clearly, the police and the military had been successful in preventing a large number of terrorist incidents. Files had been created for security-related matters, and up to forty percent of the population had some documentation kept on them either by the police, the military, the intelligence services, or all of the above.[137] 'P-tests', as they are known, were instituted, allowing the security forces to make detailed observations of the internal structure of homes, the colour of the drapes and furniture, and other minute details of a personal nature, which were applied when a terrorist was caught and created a false story of where he had been. If his information did not agree with what was known, he would be charged.[138] Still, there were 9168 "Incidents of a Security Nature" in Ulster in 1974, including 669 bombings.[139] Additionally, another terrorist group started operating. The Irish Republican Socialist Party (IRSP) split away from the OIRA, and

the Irish National Liberation Army (INLA) was established as its military wing.[140] The terrorist threat did not erode to a sufficient degree, and the proliferation of Republican and Loyalist groups only made the matter worse for the authorities. Terrorism now took on an air of permanence.

Cautious Transition and Flux: 1975-1979

The basic requirements for placing counterterrorism within the rule of law had been met by successive governments from opposite poles on the political spectrum, demonstrating a remarkable degree of consistency in criminal matters. Terrorists were treated by the courts as criminals, although special laws had been created specifically for them. The strategy of the government was to downplay the political nature of terrorism and attempt to win the 'hearts and minds' campaign for the loyalty and confidence of the public. Grand policy appeared in a state of flux, operating between a 'hard line' and 'flexibility', as the Labour government applied its new security apparatus to the problem in tandem with some concessions.

In total, 1975 was a remarkably uneventful year for counterterrorism. The threat was still substantial, but the RUC was well on its way to securing greater control over Ulster with the assistance of the army. A policy of 'criminalization' was evident and had been evolving since 1973, although the transitional phase was still incomplete.[141] The year was notable for few spectacular events, as it appeared that the government was awaiting the results of the 1973-4 shift toward means other than the army.

One antiterrorist event is worth special mention. In November, a small group of terrorists was cornered by the police and subsequently

seized two hostages in a house on Balcombe Street.[142] After six days of negotiations, the terrorists overheard a suggestion on the radio that the SAS would be called in to resolve the standoff. They surrendered shortly thereafter, displaying a degree of respect and fear for the élite antiterrorist unit. The mere mention of the unit had resolved the matter to the satisfaction of the government and sent a message to the IRA that the government had the ability to stand firm.

Special legislation addressed some of the problems in the ongoing conflict, particularly with reference to the IRA and a number of Loyalist groups. For example, Section 20 of the Northern Ireland (Emergency Provisions) Act 1973 had banned the collection, collation and dissemination of any information regarding members of the security forces. This scheduled offence acknowledged the sophistication of the IRA when it came to espionage and intelligence-gathering for their cause. However, a gap had been left in the original draft which did not specifically outlaw the collection of information about other public figures. The Northern Ireland (Emergency Provisions) (Amendment) Bill 1975 sought to correct this oversight; the collection of information for the purpose of terrorism was theoretically illegal, but the Bill "extended this provision to cover information about persons holding judicial office, court officers and prison officers".[143] The provision sought to protect public figures other than police officers and soldiers who might be targeted for terrorist action, and henceforth gave the security forces the power to investigate or charge virtually anyone in possession of materials or information which could be of value to terrorists. The powers of the police and the judiciary were enhanced once again.

The war of attrition between the IRA and the security forces continued throughout the year, providing the government with the opportunity to examine the efficacy of the measures it had taken. During the course of the year, Lord Gardiner examined the procedure of detention of terrorists in special prisons and the practice of giving them 'political' status by allowing them to socialize with their own groups, wear their civilian clothes and generally deny their existence as criminals. For the proper evolution of policy to occur, the government was forced to put an end to the process of political status. On December 5, 1975, the procedure of internment ended with the acceptance of the Gardiner Report.[144]

The government managed to secure the release of some of the detainees as a possible attempt to appease the IRA. While most agree that internment had been a failure, it has been acknowledged that most released terrorists went straight back to their old units. Indeed, the government made a greater mistake by agreeing to an IRA ceasefire call in January of 1975; despite the measures taken by the government in areas of security and purposeful deflation of political questions, terrorism increased by an alarming 15 percent.[145] The IRA had been close to its knees, and the truce merely allowed them some time to rebuild their forces. It was, in the words of one expert, "a fatal degree of appeasement by the British government".[146] While there was a definite overall trend toward 'criminalization', the British were not yet firmly in the camp of 'no concessions'.

By the end of 1975 and the beginning of 1976 it appeared that the Red Hand Commando, the Protestant Action Force and the UVF had been 'decimated' by a greater emphasis on the part of the British to incorporate

the intelligence services into the counterterrorism plan.[147] The policy of 'criminalization', or the removal of political prisoner status, had been revoked as of March 1, 1976.[148] The number of police forces in Great Britain, always an obstacle to the efficient transfer of information, was reduced from over 200 to 43 over a period of time.[149] The SAS was granted a greater role in the battle against the various terrorist groups,[150] thus suggesting a dual track was at work: First, the police and the courts were given the lead role; second, special forces were utilized more frequently to accomplish missions beyond the capabilities of the police, and in such a fashion to prevent damaging the credibility of the RUC and the courts. The war of attrition continued.

Slight structural alterations occurred in 1976, although the overall policy of the government did not change. The National Criminal Intelligence Unit (NCIU) was established, with the role of gathering and storing all matters related to terrorist activities as well as normal criminal matters.[151] Files on terrorists were transferred to FACES and HOLMES, the new computer data banks.[152] The Home Office clearly wanted to make its counterterrorism operations more sophisticated, quick, and efficient. Additionally, the unit C13 was created, absorbing the Bomb Squad from the Serious Crime Squad; it became the lead antiterrorist office in Great Britain for the next few years.[153]

On the international scene, the UK showed a new willingness to emerge from its isolationist perspective regarding terrorism. While all states go through a phase of navel-gazing in the early years of terrorist assaults, the British were one of the first to establish international contacts.[154] TREVI was established through the Council of Ministers of

the European Community as an international body to discuss matters related to terrorism.[155] It was a recognition by several states, particularly the UK, that terrorism had a significant international dimension and could be best fought by using greater contacts with Ministers from other European states. While certainly not a solution, TREVI nevertheless contributed to greater discussion of the problem and the threat.

Without a doubt, a very significant terrorist event occurred in 1976 when the PFLP and the Red Army Faction cooperated in the hijacking of an Air France jet. With a number of Jewish passengers on board, the jet came to rest at Entebbe, Uganda. A daring rescue operation was mounted by the Israelis; the hostages were freed, the terrorists were killed, and the Ugandan government was embarrassed.[156] While heralded as a major triumph of the use of force to control terrorism and as a model of heroism, the British government pursued a curious agenda. Condolences were sent by the Labour government to Idi Amin.[157] Clearly, the British were still not firmly in a 'no concessions' mode, and were certainly not nearing the 'retaliation' end of the spectrum. The message was a major blunder for the UK, since it acknowledged the legitimacy of Idi Amin's régime and failed to recognize the significance of the raid.

The period after the Prevention of Terrorism Act was one of transition and modification, allowing for slight shifts in policy as well as changes in the organizational structure of the counterterrorism establishment in Great Britain. C13, the Special Branch and a host of other specialized units managed to complement the intended efforts of the legal reforms that had occurred. The government had shown its preference for fighting terrorism, and it basically relied on the rule of law and the use

of secret units.

In 1977 it was clear that the British were well on their way to 'criminalization', as the legal modifications already in place were now being relied upon for most of the battle. The transfer of power to Northern Ireland, or 'Ulsterization', meant there was an effort under way to make the Irish responsible for more of their own affairs regarding the struggle against terrorism, as opposed to Westminster running the entire operation. The tools had been provided, and it was now largely up to the RUC to combat the terrorist threat.

The shift in responsibility did not acknowledge that terrorists are not ones given to respect borders or clear demarcations of territory, bureaucratic or otherwise. Indeed, the placement of responsibility away from the centre ran the risk of allowing the IRA to exploit weaknesses such as the inevitable hindrances in communication between different government agencies. Furthermore, there were other terrorists appearing in the UK, such as the Animal Liberation Front (ALF), the Tartan Army (Scotland), the Free Wales Army (FWA), and the Hunt Retribution Squad (HRS).[158] The threat of terrorism grew substantially due to the sheer numbers of different groups operating at the same time. Now, there were several indigenous groups, several from Ulster with different constituencies, and a growing number of groups on the Continent and from the Middle East, the latter being the most willing to export their activities. Britain was under a terrorist assault from all sides.

According to the allowances made under the Prevention of Terrorism Act and the corresponding interest in using covert groups, the British reinforced their ports of entry with officers from the Special Branch, all

of them trained to spot wanted terrorists or suspects for interrogation and detention.[159] The RUC, in the meantime, "underwent a massive reorganization and expansion" after 1976.[160] A great deal went into the expansion of covert intelligence activities, as this was identified as the best area to apply against various terrorist cadres in order to weaken them the most. By 1977 the policy of police primacy for the RUC was well established, yet difficulties in intelligence were evident. The prime sections responsible for intelligence were the RUC Special Branch and the special covert unit E4A. The army developed its own sources of information and was reluctant to share that information with anyone. BSS was not properly briefed by the army, nor was the Home Office. Indeed, the army tended to give the latter 'passive' information, or that which could be gleaned from open sources.[161] According to one senior police officer, "We used to get more information from the *Sun* than from our own intelligence system".[162] Without sharing intelligence, the RUC, the British police forces, the army and BSS virtually guaranteed the continuation of IRA outrages. If there was no other lesson to be learned in the education of bureaucrats on how to defeat terrorism, the jealous protection of information was paramount. Such attitudes would contribute to the longevity of the IRA.

The struggle against terrorism was not all bad news in 1977. After the establishment of TREVI and policy sessions with other countries through the Kilowatt Club and the Club of Berne, the SAS took its opportunity to act on the international stage. When an Air France jet was hijacked to Mogadishu, Somalia, Germany's élite unit GSG-9 responded in a rare projection of power beyond its own borders. The SAS sent two men

to assist the storming of the aircraft, and the entire operation was a rousing success.[163] In the following three years the SAS would assist in the establishment and training of 32 national antiterrorist teams, thus expanding the expertise of the British to a global scale.[164] Despite the problems Britain had with its own intelligence systems, its military forces proved their mettle in combat. The twin track of special units and legislation was beginning to succeed.

The year 1978 was a confirmation of the threats faced by the UK from different sources. The enduring disputes between Arab terrorist groups escalated on British streets, culminating in two important events. First, the PLO representative to the UK was assassinated by an Abu Nidal cell.[165] Second, Iraqi terrorists placed a bomb on the doorstep of the Conservative party headquarters, resulting in the expulsion of eleven Iraqis and the subsequent expulsion of ten Britons the next day from Iraq.[166] The Middle East conflict played itself out in a variety of other acts of terrorism, establishing Great Britain as a centre for operations. Meanwhile, the IRA's next generation was forming and the members were better educated in the ways of covert warfare than their predecessors. The war against the terrorists would become longer and more frustrating for the British.

'The Way Ahead', a policy document by the British government, announced the intention to concentrate counterterrorism in the hands of the police, with the army as a secondary reinforcement group.[167] Essentially, the document was an affirmation of what had occurred since 1973 and 1974, and ensured the continuation of that trend. The police, now publicly thrust into the primary response role, were given pay

increases of up to 30 percent in accordance with recommendations made by Edmund Davis that year.[168] Essentially, the move was meant to show government support for the police at a time when terrorist activities were on the rise and to prevent low morale. The Special Branch received a five-fold increase in manpower to cope with the demands of terrorism in the UK.[169] The army established better penetration of the IRA, including such activities as becoming members of the community, drinking and fighting with the Irish in pubs, and generally appearing as though they were part of the bunch.[170] The 'Supergrass' system began, with members of terrorist organizations giving valuable information.[171] Another special unit was added to the overall counterterrorist structure in Britain: in 1978 the Comacchio Group, part of the Royal Marines, was set up to provide special intervention units for seaborne operations against oil installations and the Faslane submarine base in the event of terrorist attacks there.[172] The improvements in police operational abilities, pay, morale, and the establishment of yet another special unit combined to place such pressure on the IRA that it was forced to abandon its columnar 'army' structure completely. Like the revolutionaries on the Continent and a number of Arab organizations, the IRA restructured itself into cells, downsizing in the process and showing that the authorities had scored a major victory.[173] This victory was a direct result of improved intelligence, both by the army and the police.[174] Nearly 3800 people had been detained under the auspices of the Prevention of Terrorism Act[175], and a mere 81 were killed from terrorism in 1978 as opposed to 300 in 1976.[176] While these figures were heartening, injury statistics did not decline, and the number of bombings in Ulster during November and

December alone numbered 140, for a total of 338 in the entire year.[177] The combination of special powers, legislation and specialized units had indeed taken their toll on terrorism, but the battle was far from over.

Policy was hardening to some degree, as the British government displayed a greater willingness to utilize the powers and units created over the years. Terrorists were not appeased, as they frequently were in other countries. The combined resources of the British government were now being applied in a campaign to suppress terrorism.

The Prevention of Terrorism Act was used as it had been intended; by the middle of 1979 there had been 4146 detentions and 169 orders of exclusion.[178] Still, terrorism was proving itself to be a tenacious method of conflict, and the British were unable to defeat the threat completely. Along with the persistent threat of the IRA and the various Loyalist groups, INLA burst onto the scene with the spectacular assassination of Tory MP Airey Neave on March 30, 1979, right in the parkade reserved for members of Parliament.[179] This was the first of several spectacular terrorist incidents during the year.

While the British turned their attention to INLA and measures to combat them effectively, including identification of members, the IRA struck out at Lord Mountbatten, who was killed while aboard his yacht.[180] Eighteen soldiers were killed at Warrenpoint the same day, and Westminster Hall was damaged by yet another bomb. The terrorists were suggesting to the government that they could attack anywhere at any time with impunity. The government was forced to respond to the threat with appropriate countermeasures.

At least three major efforts were made in 1979 to combat the growing

menace of terrorism. First, INLA was placed on the list of proscribed organizations, thus making them the target of police and army intelligence efforts.[181] Second, Sir Maurice Oldfield, the former director of SIS, was appointed to the position of Security Coordinator.[182] His mandate was to ensure the smooth flow of intelligence between the secretive organizations of the RUC, the army, the intelligence services and the decision-makers, because the lack of shared intelligence had almost certainly hampered the security forces' efforts to defeat terrorist challenges and conspiracies. Third, the British accelerated their program of cross-border activities against terrorist groups, who tended to hide south of the border in the Republic. Jack Lynch was questioned about the possibility of British overflights of Irish territory, and responded that there was "no truth" to the matter, adding the sentence, "or almost none". An aide muttered "Oh, Jesus" at the gaffe.[183] Lynch was forced to resign a month later.

The incident showed that the British were well aware of the nascent support given to terrorists south of the border and showed their willingness to use covert operations to disrupt activities where there was no legal basis to apply either regular or special criminal law.[184] The use of special operations is undoubtedly controversial, but points to other British counterterrorism efforts. First, they began to show a greater willingness to use extralegal measures to compensate for the lack of legal measures. Second, the efforts made it appear that they would fight terrorists across borders when necessary, thus displaying a stiffer overall policy than earlier. The British could no longer be accused of having either weakness in its counterterrorism program or any lack of political will.

Proving Their Worth, 1980-1983

Most of the changes in Great Britain's counterterrorism program had been made in 1974, with limited tinkering thereafter. There had been successes against various terrorist groups as a direct result of the British efforts, structures and policies, including the exertion of enough pressure on the IRA to force them to revise themselves into cellular units. While it was true that the IRA was not eliminated, there remained enough evidence in the form of casualty and attack reductions to suggest that the whole program was succeeding. The activities of the terrorists were reduced to a more tolerable level, but problems with the government's response still needed to be corrected.

The appointment of Maurice Oldfield to the position of coordinator of intelligence was arguably one of the first acknowledgements by the UK that the various intelligence agencies were inefficient because of petty turf wars. In London, the problem extended to the specialized units created for the specific purpose of counterterrorism. The Special Branch, the RPG and the DPG were having difficulties sorting out the areas in which each of them could operate, and there was a belated recognition of the need for coordination. Hence, the posting of Deputy Assistant Commissioner was established in an effort to improve the efficiency of the three units and information transfers between them.[185] Information became centralized under the Criminal Information Retrieval System (CIRIS)[186], including the use of the HOLMES and FACES systems[187]. The National Criminal Intelligence Unit (NCIU) started operations, adding yet another twist to the British program. Further, the Mountain & Arctic Warfare Cadre (M & AW) and the Special Boat Squadron (SBS) developed their own antiterrorist

capabilities to augment their special warfare roles. The threat of terrorism was now creating an inordinate number of antiterrorist units, and the system would be challenged in the near future; not by the IRA, as the threat might have suggested, but from foreigners.

On April 30, 1980, the Iranian embassy in London was taken over by a group of terrorists from an obscure group called the 'Democratic Revolutionary Front for the Liberation of Arabistan', which was most likely backed by the Iraqi government.[188] The DPG surrounded the embassy in three minutes, followed shortly after by 200 men from the SPG and the firearms unit, D11.[189] COBRA met to discuss the situation and to coordinate the response, and the SAS was placed on alert.[190] On May 5, the terrorists killed a hostage, dumping his body on the steps of the embassy. At that point, Prime Minister Thatcher gave the order for the SAS to storm the building. The JOC received that order and passed it directly to the SAS and the police. At no time was the military in control of the political situation; they were given local authority only and were to return that power to the police immediately after the event. Operation Nimrod was a resounding success, with the SAS completing their mission in just eleven minutes.[191] Home Secretary William Whitelaw was "positively euphoric", and the Prime Minister called Nimrod "a brilliant operation, carried out with courage and confidence" that made everyone "proud to be British".[192] The British were now unquestionably in a position of 'no concessions', and the raid has been credited with causing a number of Middle Eastern terrorist groups to switch their battleground to Paris.[193] In one of the most serious types of terrorist attacks, the British system had worked as intended. Over the years the cost of

preventing terrorism had increased substantially, and in 1981 alone, compensation to Northern Ireland for damaged property had exceeded £200 million[194], and subsidies for job creation were at the £1 billion mark.[195] Offences related to terrorist activities from 1974 to 1981 numbered 7793, and there had been 2161 deaths.[196] Troop levels were increased to 11,300 in the province as a direct response to fluctuations in the security situation.[197] The Special Branch had grown to more than five times its postwar level, with hundreds of officers stationed at ports of entry for the sole purpose of identifying suspected terrorists.[198] The Iranian embassy siege had proven that the new Conservative government was taking a tougher stance toward terrorists, and their resolve would soon be tested.

At the 1981 *Ard Fheis*, or annual conference of the Sinn Fein, Danny Morrison announced the strategy of the IRA: "Will anyone object here if, with a ballot paper in this hand and an Armalite in this hand, we take power in Ireland?"[199] The IRA clearly saw that a campaign of pure terror would not succeed if it was not augmented by electoral victory; it was obvious that some semblance of democratic planning had to coincide with their 'military' offensive. To supplement this effort, hunger strikes were called; IRA prisoners wanted to return to the heady days of having 'political' status in prisons and clearly sought to undermine or test the resolve of Thatcher's Conservatives.

By March 1981 the hunger strikes began in earnest, causing strong emotional responses from the Irish community in the United States. The strike was countered by an information campaign by the British Information Service (BIS) in New York, which sought to emphasize that the prisoners

were criminals and terrorists, not prisoners of conscience seeking freedom from oppression. Thatcher went on the offensive on May 28, announcing British policy on the efforts of the hunger strike:

> Faced with the failure of their discredited cause, the men of violence have chosen in recent months to play what may be their last card . . . They seek to work on the most basic of human emotions - pity - as a means of creating tension and stoking the fires of bitterness and hatred. In doing so the PIRA have placed the Catholic community on the rack.[200]

Thatcher sought to undercut sympathy for the IRA by displaying it as weak, and furthermore attempted to drive a wedge between the Catholic community and the IRA. The entire exercise was a contest in public relations, certainly not a new problem for the conflict. When some proposed that the policy of 'no concessions' was perhaps too harsh, and that it had led to a hardening of attitudes, Thatcher replied:

> I do not believe so. I still do not know of anyone who has asked me to give political or special category status. They recognise that when I say a crime is a crime is a crime and the men of violence are the enemies of society, and of democracy everywhere, they recognise that what I say is true.[201]

Thatcher successfully defeated the hunger strike by not conceding to any demands. The policy of 'no concessions' had again succeeded, and had thus shown the way ahead for the British government. A refusal to give in to terrorism not only worked better than any other proposal, but gave a moral boost to the government. The principle remained intact that violence would not be tolerated.

The controversy over the suggestion of using extralegal means for defeating terrorists had another chance for renewal in 1981. Thomas 'Slab' Murphy, an IRA leader with a farm directly on the border with the South, had been credited with 104 deaths in the security forces alone.[202] A

plan had been shelved in 1979 that called for a special team to 'snatch' him from his farm and charge him with terrorist activities.[203] Another plan in 1981 called for the use of captured IRA bomb materials to eliminate him, but that plan was also shelved.[204] While the British almost certainly thought they would be justified in using extralegal means to defeat the threat from Slab, they also displayed remarkable restraint in the matter. It was clear to them that such plans could backfire and remove any chance the government had of staying on the moral 'high road'. The rule of law would be observed.

Perhaps the most innovative plan created to this point was the decision to implement a 'supergrass' policy, not unlike what the Italians had done in order to decimate the Red Brigades. Each supergrass would be encouraged to inform in court on known members of terrorist groups and would be protected from prosecution and retaliatory attacks. Three criteria were established to determine the eligibility of informants. First, the Crown had to be certain that the supergrass would be of greater value as an informant than a defendant; second, the amount of information gained would have to be of greater value than his conviction for the interests of public safety; third, some assurance was required to demonstrate that the information gleaned from the supergrass would not be otherwise available and that the information could not be obtained without an offer of immunity.[205] Hundreds of suspected terrorists were placed under scrutiny as a result of the trials, although the program would prove to be a legal disaster. The IRA offered prospective supergrasses immunity in Eire, thus preventing some benefit to the British.[206] Few were ultimately convicted of terrorist activities, as the courts were unwilling to convict

people based on mere accusations. While the policy failed legally, it was also a great source of information. It also spread distrust within the terrorist groups and "decimated" INLA.[207] In this sense, then, the supergrass procedure was successful to the British. By causing the terrorists to eye each other with suspicion, there could be little question that some of the wind was taken from the IRA sails. The year 1981 had been a success for the government.

Subsidies paid out in Northern Ireland by British taxpayers climbed from the previous high of £1 billion to £1.3 billion in fiscal year 1982-83, including £140 million for the army alone.[208] The DeLorean project, which was designed to prevent terrorism by providing jobs, failed in its goal and cost a further £80 million.[209] Such measures have been incredibly unsuccessful in countering terrorism, thus displaying the myth that terrorism is caused by economic factors. The pattern of violence and counterviolence continued, in spite of all efforts to contain the problem. Their were some successes, but the early 1980s are generally notable for the lack of change regarding policy on the part of the British. They had settled into the unwanted position of a war of attrition with various terrorist groups, particularly the IRA.

A terrorist cell from the Abu Nidal group attempted to kill Israel's ambassador to the UK in June 1982. This particular event is notable for two reasons. First, it is evident that both the DPG and Israeli security failed to intervene, as did all the units within the British counterterrorism intelligence apparatus. Second, the attempted assassination gave Israel the pretext on which to launch Operation Peace for Galilee, the disastrous invasion of Lebanon.[210]

Terrorism in Britain began to broaden its base, as some events in 1982 suggested. INLA was certainly still in operation, and it planted a bomb at Ballykelly which killed 17 and wounded 66 others.[211] The IRA began receiving accelerated support from Col. Qaddafi, and strengthened its ties to other European terrorist groups, such as the RAF in Germany and the ETA in Spain.[212] The Animal Liberation Front (ALF) sent a handful of letter bombs to the Prime Minister and four other senior Members of Parliament, although they were intercepted in time.[213] These bombs were followed by a similar set of attempts by the Scottish National Liberation Army (SNLA).[214] These events, accompanied by Welsh groups, the rise of leftist terrorism in France and Germany and frequent aircraft hijackings, combined to produce the appearance of a full-scale attack on the British through NATO, Ulster, Wales and Scotland and virtually everywhere else. Terrorists were attacking from all sides and for all reasons, but the British nevertheless remained composed through the siege.[215]

The economic costs of terrorism were calculated in 1983 by Eire, displaying the burden placed on taxpayers from having responsibility for security in Ulster. Excluding the army, security had cost Britain £11,064,000,000 since 1969.[216] Still, that figure counted for Ulster alone, not including the UK as a whole. This is particularly interesting to note, since there had been 267 successful hijackings on a global basis since 1971, some involving British carriers, which demanded increased spending on security.[217] Additionally, other forms of international terrorism were threatening relations between states and causing anxiety for citizens as battlegrounds changed from region to region without direct challenges from

conventional sources. Between 1977 and 1983, 122 US diplomatic targets were attacked, compared with 126 against France and a more reasonable 64 against the UK.[218] There was some strong evidence that Qaddafi had sent 'hit teams' to Great Britain, largely for the purpose of eliminating his enemies abroad, including students. The Foreign Office relayed its "extreme concern" regarding the matter, and told the Libyan ambassador that any acts of violence assisted or perpetrated by Libyans on British soil would be "totally unacceptable".[219] By giving a clear warning, Britain hoped to avoid problems from Libya.

Searches of homes by British security forces were dramatically reduced from about a quarter of a million from 1972-76 to around 1500 in 1983.[220] Better use of intelligence allowed the forces to target the most productive sources of weapons and explosives, and the smaller scale meant there was a better chance of maintaining operational secrecy. Still, there was little Great Britain could do to quell the flow of weapons from the United States and Libya, nor could it prevent the manufacturing processes developed by the IRA for bomb production except through good intelligence. The war of attrition continued as before.

Three Soviet embassy officials were unceremoniously expelled from Eire in 1983 for supplying arms to PIRA,[221] thus providing additional proof of Soviet opportunism and their connections with terrorists everywhere. While Eire was willing to cooperate in this instance to help dissuade further support for the IRA, the UK also demonstrated its willingness to cooperate with others. Two neo-Nazis were sent to Germany in 1983 for terrorist activities there, thus solidifying Great Britain's approach to international terrorism: Haven would not be supplied.[222]

The IRA suffered a number of casualties as a result of attempts at direct assaults on security personnel, including SAS and RUC members. The following few years witnessed a decline in the overall death rate to some degree, probably because so many IRA members were killed.[223] Additionally, the year 1983 is notable for the supergrass trials, when the program scored its largest sweep of terrorists. Four supergrasses implicated 90 UVF from 1980-1984[224]; some 450 terrorists were charged in total[225]; and 38 IRA suspects were captured and charged with 182 offences as a result of a single supergrass, David Black.[226] In his 1983 report, the Chief Constable for Ulster placed pressure on the political masters and the judiciary in the supergrass trials, saying the outcome "is crucial to the well being of Northern Ireland"[227], but to no avail. Most of the suspects were released because the judiciary was uncomfortable with convicting terrorists on the basis of an accusation from a former colleague. Greater evidence would be required in the future. The plan to integrate internment by other means failed, but had succeeded in the identification of another large cadre of terrorists.

The Era of Continuity, 1984-1991

Terrorism had come to stay for the British, both in its forms as a nationalist/separatist challenge and as a spillover of violence from other lands and cultures. The UK had experienced virtually all types of terrorist violence, had been directly and indirectly dared to respond, and had indeed responded in due time with appropriate countermeasures, all of which were carefully considered before implementation. The public in the UK likes counterterrorism, or at least dislikes terrorism, which has

undoubtedly assisted the authorities as they have implemented various schemes, policies and structural arrangements to defeat the threat. Still, Great Britain was not 'winning' the conflict, nor was she 'losing'; the constant action/reaction of counterterrorism seldom lends itself to clear lines of victory and defeat, and the vanquished almost always return after perceptions indicate that they had been destroyed. The 'hydra' always rises again, much to the consternation of the security forces and the government.

Between 1976 and 1984, some 8281 people had been charged with various offences related to terrorism, whether they were connected with Northern Ireland or not.[228] Spending in the region had increased dramatically, as the British sought to remove any perception that they were uninterested in the welfare of the Northern Irish. In 1966, Treasury subvention to Ulster had been £52 million; in 1975 it was £313 million; in 1984 it totalled a staggering £2.436 billion, over and above the tax income of Ulster, and designated for a population of only 1.5 million.[229] Over £100 million was dumped into the Ulster economy by Europe as an economic unit, but the continentals have been extremely reluctant to become involved in Ulster's affairs beyond that.[230]

Animal rights activists increased their own presence on the terrorism scene, with the Hunt Retribution Squad, the Animal Liberation Front (ALF) and others.[231] The ALF said it had tampered with eggs, had placed bleach in shampoo and baby oil, had poisoned turkeys late in the year, and claimed to have been involved in some 500 other attacks in the previous five months.[232] The ALF was also responsible for the infamous attack involving Mars bars. Two bars were poisoned and many other packages

were stuffed with leaflets claiming to be poisoned and why; the affair caused the Mars company to pull its products from the shelves, costing some £3 million to the company alone.[233]

The Libyans proved to be a thorn in the side of the British on two major occasions in 1984. First, a demonstration occurred outside the Libyan People's Bureau by students and others against the Qaddafi régime. Shots were fired by an embassy official, killing WPC Yvonne Fletcher, even though she had been controlling the mob.[234] The embassy officials were allowed to leave Britain without charge and were swapped for officials from the British embassy in Tripoli.[235] This avenue of response was dictated both by international law, which forbids the arrest of embassy officials for any reason, and because an arrest would have certainly caused Qaddafi to lay siege to the British embassy, causing a Mexican standoff. To avoid problems, Britain opted not to retaliate. The second major incident involved the ship *Marita Ann*, which was carrying a cargo of weapons from Qaddafi to terrorists. The ship was intercepted and found to be carrying 90 rifles, 60 machine guns and 71,000 rounds of ammunition.[236] Qaddafi was reinforcing his image as a major irritant for states in the fight against terrorism.

In October 1984 the Conservative party held its convention at a hotel in Brighton. Warnings had been received by the local police about an impending terrorist attack upon the Tory Cabinet, but the information was not transferred as it should have been, nor was any action taken. A hundred pounds of gelignite very nearly killed the Prime Minister and all her Cabinet. The IRA had slipped into the hotel weeks before and had planted the bomb, using a timer from a VCR, directly behind a wall. The

combined resources of the counterterrorism effort did not prevent the incident, but worked after the fact. The bomber was caught, and it was discovered that he had plans to bomb another 12 seaside resorts in order to disrupt tourism.[237] Immediately after the explosion and the confirmation that Thatcher was unhurt, the IRA sent a message to the government through the media: "Today we were unlucky. But remember, we have only to be lucky once. You will have to be lucky always".[238]

Thatcher concluded after the incident that the whole affair could have been prevented, and that a communication problem had nearly led to her demise. Almost immediately, a new organization was established to coordinate information from the Special Branch, the intelligence agencies and the military in order to ensure timely warnings and to coordinate any response that might occur.[239] Called TIGER, for Terrorist Intelligence Gathering, Evaluation and Review, this new organization reported directly to COBRA, which in turn is very high on the political ladder. Both organizations are headed and staffed by senior civil servants and Ministers where necessary, thus showing the extent to which the UK was taking counterterrorism seriously. Notably, the deficiency in the previous structure had been in the area of intelligence. The new structure would try to prevent such a failure in the future.

The British counterterrorism effort was hampered somewhat by outside interference and hostage-takings in foreign countries of British subjects. Hezbollah kidnapped several British citizens, and Abu Nidal struck out at British targets in countries such as Spain, perhaps due to the efficiency of UK counterterrorism.[240] Qaddafi increased his interference into the internal affairs of the UK, supplying some 120 tonnes

of weapons to the IRA by shipping them to isolated stretches of shoreline, particularly near Clogga Strand, south of Dublin.[241] Among the weapons were quantities of Semtex, SA-7s, and 'Dushka' 12.7mm Soviet antiaircraft guns; the IRA, with a budget of some £5 million and plenty of revolutionary friends, was preparing to use higher technology against British security forces.

Despite the apparent support for violence from outside benefactors and the proven tenacity of the IRA and other groups, the security forces in 1985 scored a number of important successes. First, the number of bombings and shootings dropped to their lowest levels ever, with 215 and 237 respectively.[242] Second, a great operational victory was won on June 22, 1985, when the police captured Patrick Magee and four other cell members in Glasgow. In that capture, 16 bombings were prevented at resorts in Brighton, Dover, Ramsgate, Blackpool, Eastbourne, Torquay, Great Yarmouth, Folkestone, Margate, Southend, Southampton, Bournemouth and four in London.[243] Third, Harry Kilpatrick, a member of INLA, became a supergrass and helped secure the convictions of 27 INLA terrorists in court.[244]

For its part, the IRA began shooting the contractors who were given jobs repairing old structural damage to buildings caused by IRA activities in the first place.[245] A job at the Belfast City Hospital required an extra £1.3 million in bonuses to convince the men to come to work, and it is certain that the IRA wanted a good portion of that money for the operation of a protection racket. The British government, in the meantime, considered the establishment of a special unit to combat animal rights terrorists, although the idea was shelved. Nevertheless, greater attention

was paid to their activities because of a request by the Home Secretary.[246] Additionally, another special unit was created: T8 was established as a unit responsible for the physical protection of buildings and vehicles which might be targeted by terrorists.[247] Confessions were made easier to enter into court as admissable evidence under the Police and Criminal Evidence Act 1984 (PACE Act) as per the recommendations of Earl Jellicoe's suggestions in 1983.[248]

On the political front, the Anglo-Irish Agreement was signed by Thatcher and Garrett FitzGerald on November 15, 1985. The agreement was hailed as "the most important single political development" since 1973.[249] Three main elements formed the core:

> (a). . . affirm that any changes in the status of Northern Ireland would only come about with the consent of a majority of the people of Northern Ireland;
> (b) recognize that the present wish of a majority of the people of Northern Ireland is for no change in the status of Northern Ireland;
> (c) declare that, if in the future a majority of the people of Northern Ireland clearly wish for and formally consent to the establishment of a united Ireland, they will introduce and support in the respective Parliaments legislation to give effect to that wish.[250]

It was the first time Eire had officially recognized the status quo in Ulster, which is two-thirds Protestant, and gave credence to the idea that the division is permanent under conditions of sustained terrorist attack. Only under peaceful conditions could unification be seriously considered. The agreement also gave Eire a voice in future developments in Ulster, although that idea was vehemently protested against by Protestants, who feared an erosion of their power. In fact, there were undisguised threats from Protestant groups about what they might do if abandoned by Great Britain.[251]

At this juncture, Thatcher made the clearest enunciation of British operational policy in history. At a conference of the American Bar Association in London in 1985, Thatcher recognized the vulnerability of open societies to terrorism and the need to find the right balance for the threat. The policy statement was unequivocal:

> We in Britain will not accede to the terrorists' demands. The law *will* be applied to them as to all other criminals. Prisoners will *not* be released. Statements in support of the terrorists' cause will *not* be made. If hijacked aircraft land here, they will *not* be allowed to take off.[252]

No other European democracy had endured such a long and bloody struggle with terrorists, and it came as a pleasant reminder of the British spirit that Thatcher would so forcefully declare the UK's intentions with respect to terrorism from either domestic or foreign sources. While it is always dangerous to become 'boxed in' by the words of leaders, the policy statement sent messages to terrorists, their sponsors, foreign governments who sponsor or assist terrorists, domestic and foreign public audiences, friendly foreign governments with whom alliances are positive developments in counterterrorism, and domestic mandarins. All interested parties could not mistake the message: Britain would stay the course.

Whereas 1985 was a productive year in terms of successful raids against terrorists on the home front, 1986 proved to be a year of political moves designed to thwart or dissuade Middle Eastern countries from using terrorism as part of their foreign policies. When a bomb exploded at La Belle Disco in 1986, the United States launched a retaliatory air strike against Tripoli and Benghazi. Geoffrey Howe, the UK Foreign Minister, recommended the closure of all Libyan diplomatic posts, but that suggestion was defeated.[253] In the end, the UK expelled 21 Libyan 'diplomats',

ceased all arms sales or contractual negotiations, improved their surveillance of Libyans, and agreed to increase cooperation with other European intelligence agencies.[254] In the next year, 500 Libyan 'students' would be expelled from Europe.[255] Libya would not be the only country to be punished by the UK for being involved in terrorism.

In April 1986 at Heathrow airport a young pregnant Irish woman, Ms. Murphy, was detained by El Al security officers while attempting to smuggle a bomb aboard a plane after she had already passed through Heathrow's security system. Further investigation revealed that the woman was unaware of the bomb, and had carried it with her because her luggage was a gift from her boyfriend, Nezar Hindawi.[256] An operative for Syrian intelligence, Hindawi was sentenced to 45 years in prison, the longest sentence meted out in British history for terrorism. Additionally, on October 24, 1986, Geoffrey Howe said the link with Syria was "conclusive", and other measures were implemented by the British, including severing diplomatic ties with Syria, tightening security for Syrian Air, tighter visa restrictions on Syrian visitors, and a vow to veto $100 million in European aid earmarked for Syria.[257] Great Britain did everything short of covert action or open hostilities to punish both the Libyans and the Syrians, and effectively sent a strong message that the export of terrorism to the UK would not be tolerated. Great Britain's 'hard-line' policy was clearly at work once again.

By 1987 the conflict in Northern Ireland had claimed over 2500 lives and had resulted in almost 20,000 wounded. The risk of death by terrorism was ten times greater than by regular murder.[258] A total of 93 were killed in Ulster that year, including eleven at once when the IRA

bombed the Enniskillen war memorial on 8 November.[259] There was an attempt on the life of the Secretary of State for Northern Ireland, Tom King, in August. Three terrorists were captured and the fourth escaped; they each received 25 years' imprisonment for attempted murder.[260] Additionally, the UK would experience its fifteenth hijacking since 1983.[261] The terrorists were still very busy, and Great Britain was a good target.

One controversial counterterrorist operation is worthy of mention at this juncture. In October of 1987 the *Eksund*, a small freighter, was seized by French authorities off the coast of Brittany.[262] It was reported that the ship had been spotted by the DST, the DGSE, the SDECE, American spy satellites, or any combination of the above.[263] In fact, the process of capturing that ship was much different than it has been reported. The IRA, having grown weary of the captain of the ship, decided to turn him in to the authorities.[264] The captain, it seems, "had outlived his usefulness", and was considered by the IRA to be "unreliable" and "had a big mouth". The IRA contacted Interpol to warn them of the ship and its contents, and since other Europeans are always on staff at Interpol, the French had little choice but to intercept the ship; the British officer on staff would have alerted his country anyway. Lawyers miraculously appeared on the scene after just three hours to secure the release of the captain and crew. The ship "was a decoy", and was intended to throw the authorities off the track of several other ships, four of which passed at the time the *Eksund* was being searched. Additionally, the *Eksund* had made eight or nine trips in the previous few months, so the cargo was expendable. The IRA considered the whole affair to be a

public relations coup, since it showed the authorities that it had the capability to bring shiploads of weapons through at any time, much to the embarrassment of the British and French.

In May 1987 the IRA planned to assault an RUC station in Loughall, County Armagh. The SAS learned of the plan, placed the IRA team under surveillance for six weeks, and prepared for the attack. When the IRA ASU attacked the station, they walked into an ambush and all eight were killed, completely eliminating the local ASU.[265] Additionally, several leaders of INLA were killed that year, including Dominic McGlinchey, Gerard Steenson, and Thomas Power, setting back INLA operations for some time and demonstrating that greater use of intelligence and special means were being employed by the British. Not only were the British not capitulating to terrorists, but it seemed as though they were striking out at them, hoping to take the fight to the enemy. Overall, the year was not a good one for the terrorists.

By 1987 it was fairly clear that the rule of law, combined with special measures, was effective in the fight against terrorism. Modifications could now be made to the Northern Ireland (Emergency Provisions) Act 1987 which would make the Act appear to be softening somewhat and creating the impression that the IRA had lost the battle. Five significant changes were made in the Act, and a sixth change, the establishment of an anti-racketeering squad (C19), assisted with enforcing corruption laws. The EPA is of the greatest interest here.

First, the rules applied to police powers in searches and seizures were changed to require 'reasonable suspicion' as opposed to the former requirement of mere 'suspicion'.[266] Second, a terrorist gained the right

to notify someone that he had been captured, and gained the right to an attorney within 48 hours of his arrest. Third, private security firms were required to get a certificate allowing them to operate directly from the Secretary of State for Northern Ireland in order to prevent terrorist groups from operating protection rackets. Fourth, saliva samples could be taken without consent for the purpose of DNA profiling. This was not so much a change in the law, but it brought the EPA in direct line with the PACE Act of 1984. Fifth, bail applications no longer required reverse onus; the prosecution had to prove why a suspect should not get bail. While still much stronger than regular criminal law, the EPA was moving closer to a situation where the law could better fit the community and perhaps convince the local Catholic population that the law would be upheld equally and fairly. In that sense, revisions to the EPA were more a public relations move than a genuine reform.

In July 1988, the security forces managed to locate one of the 12.7mm guns the IRA had received from Libyan connections.[267] Security forces rarely manage to find such valuables, so the event was a signal that the intelligence services were operating more efficiently. It did not, however, suggest that the overall trend in counterterrorism was to intercept weapons. A list of 100 prominent names was discovered by the police in a raid on an IRA safehouse, and the Personal Protection Squad (PPS) was created with the mandate to protect prominent civil servants and politicians from terrorist attacks. The greatest measures for the security forces and the government still existed in the creation of better laws and specialized units.

In September 1988, Douglas Hurd announced four new measures for

countering terrorism using the police and the courts, each of which allowed the courts to draw a negative inference from a failure to comply. First, a refusal to account for movements could carry a connotation of a terrorist connection. Second, a refusal to account for "suspicious stains" on clothing, such as blood, could lead the courts and the police to conclude that the subject was connected with terrorism. Third, a refusal to talk to the police, yet produce an alibi in court, could cause the magistrate or judge to suspect terrorism. Fourth, a refusal to give evidence in court, including complete silence, could lead the judge to conclude or suspect terrorism.[268] The measures were for use in Diplock courts as of October 21, and actually came into effect in November.[269] Meanwhile, Great Britain declared the situation a 'public emergency' in order to avoid sanctions from the European Community, which objected to the practise of seven days' detention.[270]

The cost of the Troubles to Britain had, by this point, approached £19 billion.[271] Interviews with terrorists were banned, with stiff penalties for journalists who dared to violate the law (in fact, the bureau chief for *Maclean's* has violated this law and not been prosecuted). Special operations continued, such as Operation Flavius in March, where the SAS and BSS cooperated to intercept a group of IRA terrorists who planned to plant a bomb at the changing of the guard ceremony in Gibraltar.[272] The National Drug Intelligence Unit (NDIU) was given a peripheral role for countering terrorism within the framework of the National Criminal Intelligence Unit (NCIU).[273] The RUC's C19 unit was replaced with the Anti-Racketeering Task Force (ARTF), which included police officers, tax authorities, Customs officers and representatives from the intelligence

services.[274] The UK was certainly in favour of utilizing the approach of special units and legal countermeasures to combat terrorism. Despite the drop in casualties from IRA terrorism, there had been no corresponding reduction in the number of special units being used for counterterrorism; indeed, the number of units had increased over the years. Part of British policy, therefore, was to create small units to tackle each type of offence or group of offences, as opposed to a genuine sweep of the streets, such as the approach during the 1970s. Grand policy had not changed, but the method of attack had changed dramatically.

All this machinery meant little when Pan Am 103 was destroyed over Lockerbie, Scotland on December 21, 1988. A total of 270 people were killed, not all instantly, when the plane exploded thanks to a terrorist bomb. Despite warnings of an impending attack and arrests of PFLP-GC members in Germany earlier that year the disaster occurred anyway, thus supporting the statement that the tragedy was "a serious failure in intelligence".[275] Blame for the incident is still being debated although Libya has been sanctioned, yet there may never be an answer to how the incident happened when such massive counterterrorism bureaucracies exist in both Germany and the UK. Perhaps it is a lesson that, no matter how much bureaucracy a state creates, the state is still vulnerable to the human errors which combined to result in Lockerbie. So far, the greatest outcome from the crash on budgets has been a doubling in the airport security research and development budget, from £50 million to £100 million per year.[276] It is small consolation to the families of the victims.

There are at least six reasons for the decline in terrorism in 1989.[277] First, the PLO renounced terrorism outside Israel. Second,

squabbles between major terrorist groups such as the PLO and Abu Nidal left hundreds of terrorists decommissioned. Third, some state sponsors changed policies, such as the Soviets with Pakistan and the Afghanis with the Soviets. Fourth, counterterrorism improved to the point where terrorists were no longer necessarily controlling the situation, and international cooperation improved. Fifth, the continentals were arresting PIRA, ETA and Red Brigades terrorists at a greater rate. Sixth, many of the revolutionary terrorist groups in continental Europe were in decline.

Still, there were 420 bombings in the UK that year, largely the work of the IRA.[278] One of the most ruthless events was the bombing of the Royal Marines Band Music School in September 1989, in which 11 juveniles were killed.[279] A scandal erupted regarding the murder of an IRA member when the UFF showed that they had received information about the man from the UDR. Two UDR members were charged with murder, and the credibility of the security forces was placed in doubt.[280] Nevertheless, the UK was willing to refine its operational approach to counterterrorism, showing that it remained in a 'hard line' posture, while attempting to normalize the situation to some degree.

In the aftermath of the Lockerbie bombing, the Department of Transport (DoT) received greater powers for reasons of security. First, the DoT was given greater authority to suspend the operations of any airline if the company fell below standardized security practises and measures.[281] Additionally, the Aviation Security Branch was replaced by the Aviation Security Inspectorate (ASI), which had greater powers of inspection over airlines and was allowed to have a small terrorist threat assessment role.[282] This development underscored the decentralized

structure of British intelligence assessments and counterterrorism efforts, which had been a trend from 1974.

The Prevention of Terrorism (Temporary Provisions) Act received an overhaul in 1989 in accordance with the perceived need for some restructuring in the reaction to terrorism. Money laundering was added to the list of scheduled offences, because the IRA and several Protestant groups had branched off far into the world of organized crime, not unlike the Mafia.[283] Powers were given to the authorities under the revised Act to seize funds which had been accumulated through racketeering, and information was pooled with Inland Revenue and several social service organizations in an effort to spot and charge offenders or suspected criminals with terrorist connections.[284] Compensation and security measures for prospective 'touts' was enhanced, private security firms were closed down on occasion, others were required to seek official approval, and greater control was placed over regulatory matters regarding drinking and gaming clubs.[285] More importantly, the accused lost the right to silence in court without prejudice; the Act allowed judges to reach their own conclusions regarding the possible motives for silence in court, and could sentence the person based on assumed evidence.[286] The Prevention of Terrorism Act had been revised several times over the years, but the most important development of all is that the Act took on an air of permanence in 1989.[287] The British had come to realize that the threat of terrorism was now a permanent feature of their domestic milieu and that of the international system; the permanence of the Prevention of Terrorism Act reinforced and acknowledged that conclusion.

The IRA was and is one of the most dangerous terrorist organizations

in the world, and its activities have expanded far beyond the traditional grounds of Ulster and England. Bombings were becoming more frequent against British forces attached to NATO bases in continental Europe and the expansion of the geographical territory of IRA operations simply made it more difficult for the security forces of Britain to control the situation. By 1990, there had been well in excess of 50,000 incidents of terrorism directly attributed to the IRA.[288] Racketeering, semi-legitimate businesses, prostitution, protection rackets and narcotics played roles in the IRA's 1990 budget, estimated at some £5.3 million.[289] With such resources, the IRA was able to embark on various ventures to assist its cause. In one celebrated case, American security forces intercepted an IRA member who was attempting to purchase a Stinger missile in Florida. In another case, an American electronics engineer was arrested with an Irish accomplice while developing the capacity to manufacture ground-to-air missiles.[290] Many such cases have demonstrated the IRA's willingness to become much more dangerous.

The government met some of the challenges with more countermeasures. The Fair Employment Commission was set up to ensure that Catholics would be given equal access to jobs, and would hopefully undercut support for the IRA by giving the appearance of political fairness.[291] From a total force of 3000 officers in 1969, the RUC had expanded to over 12,000 men by 1990.[292] BSS, SIS, and GCHQ were firmly established in Ulster as part of the intelligence effort by the British.[293] Indeed, intelligence and special operations forces were now the cornerstone of counterterrorism for the UK, as was demonstrated by Thatcher's request to hold a three-day mock exercise involving the SAS,

SBS, intelligence agencies, and all police forces at a cost of some £6 million, the purpose being to establish better cooperation on operational matters and to share information.[294]

The security forces have never been completely successful, and this fact of life was shown again when Ian Gow, an MP and close friend of Thatcher's, was assassinated with a car bomb at his home.[295] Gow had apparently not requested the services of the PPS or any of the other security organizations, public or private, even though his name had been on the IRA 'hit list' discovered two years previously. Perhaps most importantly, this killing and a score of others pointed to a lack of information regarding IRA cells in Great Britain itself. Paul Wilkinson called the event an example of "a yawning intelligence gap on the mainland".[296] A lack of coordination between agencies and a corresponding lack of shared information revealed a deficiency in the massive juggernaut of British security, but the hole would not be immediately filled.

By 1991 the cost of the Lockerbie investigation had exceeded £17 million, but the case was not closed completely.[297] The focus of the investigation had been lost in a political battle for blame rather than a thorough police investigation.[298] Despite Great Britain's official acceptance of the Libya theory, the matter will undoubtedly be a source of controversy for years.

The security forces in Great Britain and Ulster continued their battle with the IRA in 1991, showing that the latter was still a formidable foe despite the expenditure of vast resources to eliminate the threat. By this year, some 102.4 tons of explosives had been seized by various security

departments, thus preventing innumerable bombings.[299] An IRA cell had been dismantled on the continent through concerted action on the part of the Dutch, Belgians and French, but another was being formed almost immediately to take its place.[300] In Ulster, the IRA attempted to shoot down an army helicopter with an SA-7 missile, thus demonstrating the technological advancement available to terrorists through such suppliers as Qaddafi and others.[301] In a further complication for security, the Irish People's Liberation Organization was formed out of a split within the Republican movement, thus creating another, different threat the security forces would be forced to face. Terrorism was not disappearing, despite the best efforts of British security.

In response to the continuing threat, the Northern Ireland (Emergency Provisions) Act was changed in 1991 to include a broad-based offence with the goal of apprehending and charging anyone who could be found in the possession of any materials useful for terrorism. The revised Act also created the long-overdue offence of "directing" terrorism, which was an offence aimed at the leadership of the IRA and the other organizations active within the jurisdiction of British law.[302] Britain began plans to reduce the number of police forces in the UK as a whole down to ten, which was deemed a better figure for operational effectiveness and the efficient flow of intelligence.[303]

In the meantime, terrorist acts still occurred with annoying frequency and danger. In February the IRA attacked Whitehall with a homemade mortar; two shells landed outside the Foreign Office and a third landed just 50 feet from where Prime Minister Major was holding a Cabinet meeting.[304] The SNLA attempted to plant a bomb at Holyrood Palace in

Edinburgh on June 28, just one day before a scheduled garden party and while Princess Anne was in the castle.[305] Not only were terrorists attempting to strike at the heart of authority, but terrorism as a whole tripled in frequency on a global basis, most likely because of the Gulf War. The UK expelled 161 Iraqis and Palestinians after the start of the war in an effort to pre-empt terrorism from foreign sources,[306] and aircraft insurance rose by as much as two thousand percent, reflecting the risks and fear of terrorism.[307] In response, Great Britain increased the military presence at Heathrow and other vital points in an effort to deter terrorist attacks and boost public confidence. Additionally, D11 (PT17) was assigned to a rapid-reaction mobile role to complement the police, RPG, DPG, and SPG, along with all the others, in round the clock operations using armoured vehicles.[308] Terrorism from both domestic and foreign sources was clearly perceived as a major threat to the UK, and the government was clearly willing to respond accordingly. A major shift in operational policy, however, was about to start.

The New Phase: A Lesson for All?

The IRA, in particular, has proven itself to be an extremely tenacious foe for British security to tackle. The plethora of operational organizations, judicial reform, political negotiations and intelligence and military activities have succeeded only in reducing the death toll from terrorism, but the actual threat from terrorism remains substantial. Bombings and shootings remained a frequent feature of the political landscape in Great Britain and Northern Ireland, including an attack on January 10, 1992 just 274 metres from the Prime Minister's residence.[309]

Troop levels in Northern Ireland were increased to "well over 17,000", indicating a greater effort on the part of the British to use military force to quell the threat.[310] After an IRA attack on Protestant construction workers, Major said the terrorists would be "hunted and hunted and hunted for the rest of their days until we find them".[311] The army, for its part, ambushed another IRA attack on an RUC station, killing four terrorists in the process not long after Major's announcement.[312] The battle against the terrorists entered yet another, bloodier phase.

In response to the lack of success on the part of the antiterrorist teams already established and the frustrating lack of intelligence sharing, Great Britain announced a shift in policy. Much to the chagrin of Scotland Yard, BSS was given the lead agency position in counterterrorism under the leadership of Stella Rimington[313] and currently expends up to 70% of its resources on terrorism.[314] The shift in policy probably should have been made in the late-1960s, but it nevertheless marks a new period of militancy amongst British decision-makers regarding the threat of terrorism.[315] BSS will act as a centralized location for the deposit and analysis of intelligence and will likely use their expertise to penetrate the IRA and other terrorist organizations with the goal being to identify all members and sweep the terrorist gangs clean in the medium to long term. The change of lead agencies effectively means that the army and the police have not been able to succeed fully with the powers given them, so BSS may step in and apply less conventional methods of countering terrorist groups. This may involve an increase in the number of controversial operations in the future.

In a move designed to bolster political discussions with various

groups throughout Ulster and to undercut support for the IRA, the British government proscribed the UDA in August, 1992.[316] The move did nothing to reduce terrorism, as the IRA responded with an increase in bombings in the heart of London, to the point where the police were forced to set up roadblocks in downtown London for the first time in history.[317] Billions of pounds in damages have resulted from several large bombs in the financial district. The Prime Minister responded to an attack in Warrington that killed a small child by restating his position: "they [the IRA] should know that we will hound them for the rest of their days until we find them".[318] Furthermore, a proposal was tabled for discussion which could end the right to silence in court for accused individuals in England, not unlike the provisions in Ulster.[319] Also, reports indicated that a Skyship 600 would be purchased from the Americans for the purpose of improving aerial surveillance in active areas.[320] Overall, with BSS in charge of operations and intelligence, the military ready to assist, a number of specialized police agencies continuing in their role, and with current antiterrorist legislation, the UK is poised at the apex of counterterrorism.

Summary

British grand policy was forced to evolve in a reactive manner from the beginning of the modern age of terrorism. Unprepared for the size and strength of the threat, the British began with a policy of benign neglect in Northern Ireland. With the involvement of the military in Northern Ireland, Great Britain then launched into a brief era of active involvement with some vacillation and occasional negotiations. By 1973-74,

grand policy evolved to that of 'no concessions' in the province, combined with phased release of detainees, which was a position generally held until very recently. The newest phase of policy places Great Britain into a grey area between 'no concessions' in its defensive connotation and 'pre-emptive, aggressive involvement' with the use of BSS at the helm. This is the most advanced position to date in Europe, and it provides the world with a model to follow for the next decade.

There have been slight differences in operational policy between Great Britain's approach to counterterrorism in Northern Ireland and that used on the mainland. In Northern Ireland, the process evolved in several phases: 1) RUC in charge, with B-Specials in reserve; 2) army in charge, with UDR in reserve; 3) power-sharing between army and RUC, with UDR in reserve and enhanced laws; 4) RUC in charge, with UDR and army in reserve, and with enhanced special forces and intelligence activities; 5) RUC in charge, with expanded role for BSS, army, special forces, UDR/RIR, and all information to BSS. This last structural shift is likely to remain as it is for at least several years, if not longer.

Operational policy in Great Britain changed less over time than in Northern Ireland, particularly because of restraints on the use of the military. The operational code has evolved as follows: 1) police only; 2) police and intelligence; 3) police in the lead, with an expanded intelligence role, legal reforms, and the creation of special units for antiterrorism and command and control of events, and SAS for the MACP role; and 4) intelligence in the lead with a large role for police, and a continued MACP role for special armed forces units. The greatest changes, as noted earlier, were in 1974 and 1992. This operational structure is likely to

remain for several years.

Overall, the UK has faced the greatest threat from terrorism of any European country, yet has been rather cautious in its approach to counterterrorism. There has been no great rush to curtail civil liberties; those whose liberties are stifled are those who pose threats to security. Great Britain consistently reacted to terrorism with firmness over the years, despite changes in operational policies and grand policy at the beginning. Now, a new era has begun, with the apex of the development of counterterrorism being pushed one more step along the continuum. With BSS at the helm for the foreseeable future, the activities of terrorists affecting the UK will be interesting to observe, as will the effectiveness of counterterrorism measures and policy.

Notes to Chapter Two

1. The name 'Great Britain' shall be used in the present context to denote the United Kingdom for reasons of simplicity. Hence, 'British' will refer to all matters of security controlled at least to some degree by the British Parliament, police, intelligence services, armed forces and all other vehicles of policy.

2. Paul Wilkinson, "British Policy on Terrorism: An Assessment", in Juliet Lodge, ed., The Threat of Terrorism, London: Wheatsheaf Books, 1988, p.30. The Provisional IRA, or Provos, perhaps romantically trace their heritage back to the Fenians, otherwise known as the Irish Republican Brotherhood, which was created in 1858.

3. John E. Finn, Constitutions in Crisis: Political Violence and the Rule of Law, New York: Oxford University Press, 1991, p.53

4. J. Bowyer Bell, A Time of Terror: How Democratic Societies Respond to Revolutionary Violence, New York: Basic Books, 1978, p.211. See also, Donna Schlagheck and James L. Walker, "Democratizing Nations and Terrorism: The Effect of Political Violence on Civil Liberties", Current World Leaders, 35:2 (April 1992) p.307 fn 5.

5. John E. Finn, "Public Support for Emergency (Anti-Terrorist) Legislation in Northern Ireland: A Preliminary Analysis", Terrorism: An International Journal, 10:2 (1987) p.115

6. J. Bowyer Bell, A Time of Terror, *op. cit.*, p.210

7. E. Moxon-Browne, "Terrorism in Northern Ireland: The Case of the Provisional IRA", in Juliet Lodge, ed., Terrorism: A Challenge to the State, Oxford: Martin Robertson, 1981, p.149

8. J. Bowyer Bell, A Time of Terror, p.223

9. *Ibid.*

10. For an interesting, brief history of the Troubles, see "Understanding Northern Ireland", a production of Ulster Television; PPTV May 12, 1993.

11. J. Bowyer Bell, A Time of Terror, p.213

12. E. Moxon-Browne, "Terrorism in Northern Ireland: The Case of the Provisional IRA", in Lodge, ed., Terrorism: A Challenge to the State, *op. cit.*, p.149

13. Brian Crozier, ed., "Ulster: Politics and Terrorism", Conflict Studies #36, London: ISC (June 1973) p.19. This is one of the better works on the early years of terrorism in the UK, perhaps owing to the date of publication.

Categories of policies, such as 'benign neglect', 'no concessions' and

others are named after policy types used by J. Bowyer Bell, A Time of Terror: How Democratic Societies Respond to Revolutionary Violence, and O.P. St. John, Air Piracy, Airport Security and International Terrorism: Winning the War Against Hijackers.

14. *Ibid.*, p.2

15. *Ibid.*, p.2

16. J. Bowyer Bell, A Time of Terror, p.215

17. "Northern Ireland: Problems and Perspectives", Conflict Studies #135, London: ISC (1982), p.15

18. G. Davidson Smith, Combating Terrorism, London: Routledge, 1990, p.147

19. Joanne Wright, Keith Bryett, "Propaganda and Justice Administration in Northern Ireland", Terrorism and Political Violence, 3:2 (Summer 1991) p.35. This level would rise to over 12,000 by 1990, and would be augmented by over 15,000 troops, as well as the UDR/RIR.

20. "Ulster: Politics and Terrorism", Conflict Studies #36, *op. cit.*, p.6

21. James Callaghan, A House Divided, Collins, 1973; cited in Jennifer Shaw, ed., Ten Years of Terrorism, London: RUSI, 1979, p.49.

22. Jim Smyth, "Stretching the Boundaries: The Control of Dissent in Northern Ireland", Terrorism: An International Journal, 11:4 (1988) p.290

23. John E. Finn, Constitutions in Crisis: Political Violence and the Rule of Law, New York: Oxford University Press, 1991, p.63

24. *Ibid.*

25. Anthony M. Burton, Urban Terrorism: Theory, Practice & Response, New York: The Free Press, 1976, p.178

26. *Ibid.*

27. Keith Jeffery, "Intelligence and Counter-Insurgency Operations: Some Reflections on the British Experience", Intelligence and National Security, 2:1 (January 1987) p.137-138

28. O.P. St. John, Air Piracy, Airport Security, & International Terrorism: Winning the War Against Hijackers, New York: Quorum Books, 1991, p.163

29. *Ibid.*

30. Grant Wardlaw, Political Terrorism: Theory, Tactics, and Counter-Measures, Cambridge: Cambridge University Press, 1989 (2nd edition), p.59

31. "Northern Ireland: An Anglo-Irish Dilemma?", Conflict Studies #185, London: ISC (March 1986), p.10

32. Patrick Brogan, The Fighting Never Stopped, New York: Vintage Books, 1990, p.380

33. Casualty rates are interesting only when they establish a change in targets, tactics or some other variable which can be countered by the authorities. Analyses based solely on body counts tend to miss the point completely and can lead to the unfortunate conclusion that the threat is not serious enough to require strict countermeasures. For instance, by 1992 there were about 3000 killed in Ulster out of a population of some 1.5 million over the entire period of study. In the UK as a whole, this would translate to 112,000 dead; in France 104,000; in West Germany 120,000; in the United States 460,000. Those figures are *over and above* the 'normal' murder rate, which are casualties inflicted by reasons of passion or other private concerns. Taken in this context, terrorism in the UK appears to be more like a war.

34. Peter Janke, D.L. Price, "Ulster: Consensus and Coercion", Conflict Studies #50, London: ISC, 1974, p.22

35. *Ibid.,* p.2; see also, E. Moxon-Browne, "Terrorism in Northern Ireland: The Case of the Provisional IRA", in Juliet Lodge, ed., Terrorism: A Challenge to the State, *op. cit.,* p.150

36. Patrick Brogan, The Fighting Never Stopped, *op. cit.*, p.379

37. *Ibid.*

38. Confidential interview.

39. David Bonner, "Combating Terrorism in the 1990s: The Role of the Prevention of Terrorism (Temporary Provisions) Act 1989", Public Law, (Autumn 1989), p.453, 474

40. Confidential interview. A recurring theme in British counterterrorism efforts is the occasional outburst of irrational interference into the workings of the police. Such action has led, over the years, to a number of scandals involving people who were arrested and wrongfully convicted. The UK police attribute these problems directly to interference by political masters.

41. Richard Clutterbuck, "Terrorism and the Security Forces in Europe", Army Quarterly and Defence Journal, vol. 111 (January 1981), p.21; see also, Christopher Dobson and Ronald Payne, Counterattack: The West's Battle Against the Terrorists, New York: Facts on File, 1982, p.43

42. G. Davidson Smith, Combating Terrorism, *op. cit.*, p.148

43. Richard Clutterbuck, "Terrorism: A Soldier's View", in Jennifer Shaw, ed., Ten Years of Terrorism, *op. cit.*, p.77

44. Anthony M. Burton, Urban Terrorism: Theory, Practice & Response, *op. cit.*, p.180

45. Keith Jeffery, "Intelligence and Counter-Insurgency Operations: Some Reflections on the British Experience", Intelligence and National Security, 2:1 (January 1987), p.137. See also, David Charters, ed., Democratic Responses to International Terrorism, New York: Transnational Publishers, 1991, p.256

46. Keith Jeffery, "Intelligence and Counter-Insurgency Operations", *op. cit.*, p.126

47. *Ibid.*

48. *Ibid.*

49. *Ibid.*, p.138

50. J.M. Spillane, "Terrorists and Special Status: The British Experience in Northern Ireland", Hastings International and Comparative Law Review, 9:3 (Spring 1986), p.487 fn 39

51. Brian Crozier, ed., Annual of Power and Conflict, 1971, London: ISC, 1972, p.18

52. *Ibid.*, p.19

53. *Ibid.*, p.17

54. By 1973 the UDA had 4,000 to 6,000 members and 10,000 to 15,000 active supporters. See Brian Crozier, ed., "Ulster: Politics and Terrorism", Conflict Studies #36, London: ISC (June 1973), p.19

55. John E. Finn, Constitutions in Crisis: Political Violence and the Rule of Law, New York: Oxford University Press, 1991, p.68. See also, Paul Wilkinson, ed., British Perspectives on Terrorism, London: George Allen & Unwin, 1981, p.21

56. Council of Europe, European Commission of Human Rights, Appl. #5310/71, Ireland Against the United Kingdom of Great Britain and Northern Ireland, Report of the Commission, Strasbourg: January 25, 1976, p.53

57. *Ibid.*, p.517

58. J. M. Spillane, "Terrorists and Special Status: The British Experience in Northern Ireland", Hastings International and Comparative Law Review, 9:3 (Spring 1986), p.487 fn 43

59. *Ibid.*, p.488

60. James Adams, "The Financing of Terror", TVI Report, 7:3 (1987), p.33

61. *Ibid.*

62. David Charters, "The Changing Forms of Conflict in Northern Ireland", Conflict Quarterly, vol. 1 (Fall 1980), p.38 fn 11. The figures are from official RUC records.

63. This account is taken from Peter Janke, "Ulster: A Decade of Violence", Conflict Studies #108, London: ISC, 1979, p.12. There has been a great deal of controversy regarding this event. Many allege that the soldiers were fired upon from IRA members inside the crowd and responded with their own fire. It does seem unlikely that the British troops, renowned for their discipline, would shoot first at unarmed civilians. Either way, the focus of this discussion is on the consequences of the incident.

64. Martha Crenshaw, "The Persistence of IRA Terrorism", in Yonah Alexander and Alan O'Day, eds., Terrorism in Ireland, London: Croom Helm, 1984, p.248. See also, Patrick Brogan, The Fighting Never Stopped, *op. cit.*, p.380

65. Patrick Brogan, The Fighting Never Stopped, p.390.

66. Abraham Miller, "The Evolution of Terrorism", Conflict Quarterly, vol. 5 (Fall 1985), p.7

67. Brian Crozier, ed., "Ulster: Politics and Terrorism", Conflict Studies #36, *op. cit.*, p.18. The *Manchester Vigour* was inspected a few months later and more weapons were found, although the quantity was much smaller. See Crozier, ed., Annual of Power and Conflict 1973-74, London: ISC 1974, p.21

68. David Charters, ed., Democratic Responses to International Terrorism, Ardsley-on-Hudson NY: Transnational Publishers, 1991, p.258

69. *Ibid.*

70. Peter Janke, "Ulster: A Decade of Violence", Conflict Studies #108, London: ISC, 1979, p.23

71. Confidential interview.

72. Brian Crozier, ed., "Ulster: Politics and Terrorism", p.20

73. Crozier, "Ulster: Politics and Terrorism", p.6

74. Paul Wilkinson, ed., British Perspectives on Terrorism, p.30

75. "Northern Ireland: Problems and Perspectives", Conflict Studies #135, London: ISC, 1982, p.43

76. Crozier, "Ulster: Politics and Terrorism", p.20

77. *Ibid.*, p.7; see also "Northern Ireland: Problems and Perspectives", Conflict Studies #135, London: ISC, 1982, p.12

78. "Northern Ireland: Problems and Perspectives", Conflict Studies #135, London: ISC, 1982, p.21

79. Crozier, "Ulster: Politics and Terrorism", p.7

80. *Ibid.*, p.20

81. Gayle Rivers, The War Against the Terrorists: How to Win It, New York: Stein & Day, 1986, p.192

82. Peter J. Sacopulos, "Terrorism in Britain: Threat, Reality, Response", Terrorism, 12:3 (1989), p.162

83. Tom Bowden, "Men in the Middle -- The UK Police", Conflict Studies #68, London: ISC, February 1976, p.14

84. One interesting intelligence operation concerned the Four-Square Laundry. Undercover operatives provided an economical cleaning service while checking for signs of blood and explosives residue on the clothes of customers. This operation was probably run by an E4A unit, but could also have been either an MRF unit or perhaps the SAS. The operation was blown by the IRA on October 2, 1972 and all the operatives were killed. See Brian Crozier, "Ulster: Politics and Terrorism", Conflict Studies #36, London: ISC (June 1973), p.12

85. Richard Clutterbuck, Terrorism, Drugs and Crime in Europe After 1992, London: Routledge, 1990, p.78

86. The following recommendations are from the Summary of Conclusions, in Lord Diplock, Report of the Commission to Consider Legal Procedures to Deal with Terrorist Activities in Northern Ireland, London: HMSO, 1972 (Cmnd. 5185).

87. John E. Finn, Constitutions in Crisis: Political Violence and the Rule of Law, New York: Oxford University Press, 1991, p.91

88. United States, Defense Intelligence Agency, Terrorist Group Profiles, Washington: US Government Printing Office, March 1988, p.56

89. Peter Wright, Paul Greengrass, Spycatcher, New York: Viking Penguin Inc., 1987, p.438

90. *Ibid.*, p.442. Along with threats from the IRA and Warsaw Pact intelligence agencies, BSS was also faced with budgetary restrictions, political fallout from a variety of scandals, and an increase in labour militancy. The attitude of the British government at the time seemed to place far less importance on the IRA than it did on any other source of threat to national security. This assessment of priorities would prove to be short-sighted.

Additionally, while BSS seems to have stayed away from the IRA for the most part, suggestions occasionally arise that the army may have used electronic signals to cause premature detonations in IRA bombs, which were frequently constructed with remote radio detonators at the time. This interesting technique may have caused quite a number of IRA casualties, but the IRA soon changed to mercury-tilt switches.

91. Crozier, "Ulster: Politics and Terrorism", *op. cit.*, p.20

92. See, for example, Brian Crozier, ed., Annual of Power and Conflict 1973-1974, London: ISC, 1974, p.19. PIRA strength estimates were placed between 1000 and 1300 members, 500 of which were active in Ulster.

93. *Ibid.*

94. *Ibid.*, p.2

95."Northern Ireland (Emergency Provisions) Act 1973", Current Law Statutes Annotated 1973, Ch.56. See also, Merlyn Rees, "Terror in Ireland - and Britain's Response", in Benjamin Netanyahu, ed, International Terrorism: Challenge and Response, Jerusalem: The Jonathan Institute, 1981, p.277. The latter work is a compilation derived from a conference in 1979. An article by George Will contains a reference to the shock power that a terrorist group could achieve by bombing the World Trade Center.

Great Britain also ratified the 1971 Montréal Convention against hijacking, entrenching the principle of 'extradite or prosecute' (the Protection of Aircraft Act 1973). See Jennifer Shaw, ed., Ten Years of Terrorism, *op. cit.*, p.161. For a thorough treatment of hijacking, see St. John, Air Piracy, Airport Security & International Terrorism.

96. Council of Europe, European Commission of Human Rights, Ireland Against the United Kingdom of Great Britain and Northern Ireland, Report of the Commission, Strasbourg (January 25, 1976), Appl. #5310/71, p.16

97. Clutterbuck, Terrorism, Drugs and Crime After 1992, p.79

98. *Ibid.*

99. *Ibid.*, p.78

100. Joanne Wright and Keith Bryett, "Propaganda and Justice Administration in Northern Ireland", Terrorism and Political Violence, 3:2 (Summer 1991), p.27

101. Peter J. Sacopulos, "Terrorism in Britain: Threat, Reality, Response", Terrorism, 12:3 (1989) p.156

102. "Northern Ireland (Emergency Provisions) Act 1973", Current Law Statutes Annotated 1973, Ch.56

103. *Ibid.*, n.p.

104. *Ibid.*

105. An accurate and permanent definition of the threat is invaluable in that it provides a legal basis for counterterrorism within the rule of law, establishes who and what will be fought using special legislation, and what measures may be required. It also contributes to a greater understanding of the degree of threat posed by extremists by providing a framework for categorization that prevents inclusion of criminal activities which are not motivated by some political concern.

106. Peter Janke, "Ulster: A Decade of Violence", Conflict Studies #108, *op. cit.*, p.14

107. Anthony M. Burton, Urban Terrorism: Theory, Practice & Response, *op. cit.*, p.210

108. Christopher Dobson and Ronald Payne, Counterattack: The West's Battle Against the Terrorists, p.43

109. Juliet Lodge, ed., The Threat of Terrorism, p.44

110. Peter Janke, "Ulster: A Decade of Violence", p.23

111. Grant Wardlaw, Political Terrorism: Theory, Tactics, and Counter-Measures, p.127

112. Crozier, Annual of Power and Conflict 1973-74, p.19

113. *Ibid.*, p.20

114. The IRA is frequently cited, perhaps derisively, as a working-class group with little understanding of political matters. The inference is that they are unsophisticated and thus should be easier to crush. Little analysis has been done to demonstrate that their roots may actually make them tougher than other terrorist groups; the attitude of scoffing at politically unsophisticated blue-collar people probably decreases the chances of their defeat at the hands of the British, since paternalism breeds and displays ignorance. In other words, attitudes may have contributed to consistent underestimation of the group. This terrorist group may never be defeated, but it will certainly last longer if it is not given even grudging respect.

115. Loyalists in paramilitaries numbered between 50,000 and 100,000 by 1974. See Keith Maguire, "The Intelligence War in Northern Ireland", International Journal of Intelligence and Counterintelligence, 4:2 (Summer 1990) p.150

116. David Charters, ed., Democratic Responses to International Terrorism, *op. cit.*, p.101

117. n.a., "Aviation Security Remains a Top Priority", ICAO Journal, 46:7 (July 1991) p.45

118. Brian Crozier, ed., The Annual of Power and Conflict 1974-75, London: ISC, 1975, p.30. See also, Patrick Brogan, The Fighting Never Stopped, *op. cit.*, p.390

119. Peter Janke, D.L. Price, "Ulster: Consensus and Coercion", Conflict Studies #50, London: ISC, 1974, p.8

120. *Ibid.*, p.18. It had become a practice of the IRA to recruit youngsters into roles of snipers and bombers, as well as valuable sources of intelligence. For example, the IRA used (and still uses) children to watch RUC personnel, noting where they live, the types of cars, licence numbers, and so on. This has contributed to large losses for RUC personnel and their families. Confidential interview.

121. *Ibid.*, p.19

122. Confidential interview.

123. Joanne Wright, Keith Bryett, "Propaganda and Justice Administration in Northern Ireland", Terrorism and Political Violence, 3:2 (Summer 1991) p.27

124. Merlyn Rees, "Terror in Ireland -- And Britain's Response", in Paul Wilkinson, ed., British Perspectives on Terrorism, London: George Allen & Unwin, 1981, p.85

125. Richard Clutterbuck, Terrorism, Drugs and Crime in Europe After 1992, London: Routledge, 1990, p.86. The 'Birmingham Six', as the terrorists were called, were cleared of any wrongdoing after more than 15 years in prison. In several confidential interviews, most police officers and others attributed the wrongful conviction of the Six to pressure from Whitehall to find the offenders. It seems that there has been a significant amount of political interference in police matters, particularly at times of intense terrorist attacks.

Since that time, the large Irish community in Birmingham has provided the police and intelligence services with a great deal of information in an effort to disassociate themselves from the IRA, and the women's movement has been very helpful as well. Confidential interview.

126. Abraham H. Miller, "The Evolution of Terrorism", Conflict Quarterly, vol. 5 (Fall 1985) p.8

127. "The Prevention of Terrorism (Temporary Provisions) Act 1974", Current Law Statutes Annotated 1974, ch. 56.

128. Prevention of Terrorism Act, n.p. All information here is directly from the Act unless otherwise stipulated. The ban on meetings has always been considered "a joke" by security personnel. Confidential interview.

129. There are many sources of information regarding the structure of Britain's counterterrorism apparatus, many of which are grossly inaccurate. Two of the most authoritative are: Paul Wilkinson, Terrorism and the

Liberal State, London: Macmillan, 1986 (second ed.); and James Adams, Secret Armies, London: Pan Books, 1987.

Many other sources contributed to the structural model found here, although most are narrowly focused or blurry. Human sources all requested anonymity, even when all they contributed was confirmation of existing information; they were nevertheless extremely valuable.

130. See James Adams, Secret Armies, for a detailed account of the way the system functioned from COBRA downward in the Iranian Embassy siege of 1980. This account is quite good, but somewhat incomplete, placing its major focus on the SAS alone.

131. The RPG is frequently cited as the RDPG, or the Royalty and Diplomatic Protection Group. In fact, the two are not directly related.

132. Each police force has its own structure in this specific area; the London Metro police were selected here as a demonstrative model.

133. For a discussion of the DPG, see Tom Bowden, "Men in the Middle -- The UK Police", Conflict Studies #68, London: ISC (February 1976). The DPG is part of the Special Branch and is close to the Personal Protection Squad (PPS). They have at their disposal: three bases; maroon cars; their own radio frequency; special training; and a host of sophisticated weaponry not normally seen in the UK. The weaponry in itself was a departure from traditional policing for the British. The DPG maintains liaison with the GSG-9 in Germany and the Israeli Mossad. Confirmed by confidential interview. The DPG now consists of about 430 heavily armed police. See "Guns carried openly", Winnipeg Free Press, August 9, 1994, p.A2.

134. A number of groups are designated by a single letter followed by one or two digits. This provides the British with greater secrecy and is a phenomenon unique to them; recall the various wartime intelligence agencies such as MI5, MI6, and MI9 for example. The UK seems to have a cultural bent for innocuous and vague titles. Furthermore, the symbol C7, for example, stands for the third floor of the building they occupy, and the number denotes the office number *opposite* the hall from their own. Confidential interviews.

135. Paul Wilkinson, Terrorism and the Liberal State, p.160

136. Council of Europe, European Commission of Human Rights, Ireland Against the United Kingdom of Great Britain and Northern Ireland (Appl. #5310/71), *op. cit.*, p.553

137. Paul Wilkinson, Terrorism and the Liberal State, p.160. See also, Wilkinson, "British Policy on Terrorism: An Assessment", in Lodge, ed., The Threat of Terrorism, p.37; and Keith Jeffery, "Intelligence and Counter-Insurgency Operations in Northern Ireland: Some Reflections on the British Experience", Intelligence and National Security, 2:1 (1987) p.132

138. See Wilkinson, Terrorism and the Liberal State, p.160; and Jeffery, "Intelligence and Counter-Insurgency Operations", p.132

139. Tom Bowden, "Men in the Middle -- The UK Police", Conflict Studies #68, London: ISC (February 1976), p.18

140. n.a., "Northern Ireland: Problems and Perspectives", Conflict Studies #135, London: ISC (1982), p.25

141. E. Moxon-Browne, "Terrorism in Northern Ireland: The Case of the Provisional IRA", in J. Lodge, ed., Terrorism: A Challenge to the State, Oxford: Martin Robertson, 1981, p.160. Moxon-Browne notes 1975 as the year when terrorism started to be treated as "ordinary crime". The dividing line, as contended here, may not be quite that clear.

142. B. Crozier, Annual of Power and Conflict 1975-76, London: ISC, 1976, p.63

143. Paul Wilkinson, Terrorism and the Liberal State, *op. cit.*, p.172

144. Joanne Wright, Keith Bryett, "Propaganda and Justice Administration in Northern Ireland", Terrorism and Political Violence, 3:2 (Summer 1991) p.31

145. Wilkinson, Terrorism and the Liberal State, p.160-161.

146. Paul Wilkinson, "British Policy on Terrorism: An Assessment", in Juliet Lodge, ed., The Threat of Terrorism, London: Wheatsheaf Books, 1988, p.38

147. H.H. Tucker, ed., Combating the Terrorists: Democratic Responses to Political Violence, New York: Facts on File, 1988 (n.p./introduction).

148. Joanne Wright, Keith Bryett, "Propaganda and Justice Administration in Northern Ireland", Terrorism and Political Violence, 3:2 (Summer 1991) p.31. See also, "Northern Ireland: Problems and Perspectives", Conflict Studies #135, London: ISC, 1982, p.30; and Richard Clutterbuck, Terrorism, Drugs and Crime in Europe After 1992, London: Routledge, 1990, p.163

149. Tom Bowden, "Men in the Middle: The UK Police", Conflict Studies #68, London: ISC (February 1976) n.p. There are plans to reduce this figure to about ten.

150. Keith Maguire, "The Intelligence War in Northern Ireland", International Journal of Intelligence and Counterintelligence, 4:2 (Summer 1990) p.150

151. "Northern Ireland: Problems and Perspectives", Conflict Studies #135, p.20

152. HOLMES stands for Home Office Large and Major Enquiry System. FACES stands for Facial Analysis Comparison and Elimination System.

153. C13 exists to this day, headed by George Churchill-Coleman; it is occasionally called SO13.

154. Israel had been calling for a greater international role for several years.

155. TREVI stands for Terrorism, Radicalism, Extremism and Violence International.

156. The famous raid on the airliner has been the subject of movies, books, articles, and even as a model for other nations on how to rescue hostages. The Jonathan Institute in Jerusalem is named after the commander of the raid, Jonathan Netanyahu, who was killed by a Ugandan soldier.

157. O.P. St. John, "Counterterrorism Policy-Making: The Case of Aircraft Hijacking, 1968-1988", in David Charters, ed., Democratic Responses to International Terrorism, Ardsley-on-Hudson, NY: Transnational Publishers, 1991, p.102

158. For an interesting discussion of animal rights extremism and associated terrorist activities, see G. Davidson Smith, "Issue Group Terrorism: Animal Rights Militancy in Britain", TVI Journal, vol. 5 (Spring 1985).

159. Confidential interview.

160. Steve Bruce, "Northern Ireland: Reappraising Loyalist Violence", Conflict Studies #249, London: RISCT (March 1992) p.9

161. Confidential interview.

162. Confidential interview. The *Sun* is a tabloid newspaper in the UK.

163. See James Adams, Secret Armies, for an interesting discussion of Operation Magic Fire.

164. *Ibid.*, p.339

165. Brian Crozier, ed., Annual of Power and Conflict 1978-79, London: ISC 1979, p.85

166. *Ibid.*

167. John B. Wolf, Antiterrorist Initiatives, New York: Plenum Press, 1989, p.128-129

168. Confidential interview.

169. F.E.C. Gregory, "The British Police and Terrorism", in Paul Wilkinson, ed., British Perspectives on Terrorism, London: George Allen & Unwin, 1981, p.113

170. Confidential interview.

171. *Ibid.* Many in British police forces considered Joe Cahill to be an informant; in some of the early supergrass trials the information presented "had to have come from the top" of the IRA command.

172. H.H. Tucker, ed., Combating the Terrorists: Democratic Responses to Political Violence, New York: Facts on File, 1988. p.198. The group received its name from a Second World War battle in the Comacchio Valley in northern Italy. The group originally had a strength of 350 men.

173. n.a., "Northern Ireland: Reappraising Republican Violence", Conflict Studies #246, London: RISCT (Nov./Dec. 1991) p.13; and Richard Clutterbuck, Terrorism, Drugs and Crime in Europe After 1992, London: Routledge, 1990, p.75

174. Clutterbuck, Terrorism, Drugs and Crime, p.75

175. Crozier, Annual of Power and Conflict 1978-79, p.82

176. *Ibid.*, p.87. The figure of 100 deaths per year has generally held since this time.

177. *Ibid.*, p.88

178. E. Moxon-Browne, "Terrorism in Northern Ireland: The Case of the Provisional IRA", in J. Lodge, ed., Terrorism: A Challenge to the State, Oxford: Martin Robertson, 1981, p.159

179. Abraham H. Miller, "Terrorism and the Media in the UK: Policy as Symbolic Ritual", in D. Charters, ed., Democratic Responses to International Terrorism, *op. cit.*, p.310

180. Patrick Brogan, The Fighting Never Stopped, *op. cit.*, p.380

181. Keith Maguire, "The Irish National Liberation Army", Armed Forces, 6:6 (June 1987), p.252. INLA had been in contact with *Action Directe*, the RAF and the PFLP. Proscription of organizations may make the work of intelligence agencies more difficult, as it has been argued, but there are benefits. First, the police are directed to work against proscribed organizations. Second, the public is given the indisputable impression that the government is willing to fight terrorism.

182. Keith Jeffery, "Intelligence and Counter-Insurgency Operations: Some Reflections on the British Experience", Intelligence and National Security, 2:1 (1987), p.127

183. Eunan O'Halpin, "Anglo-Irish Security Cooperation: A Dublin Perspective", Conflict Quarterly, vol. 10 (Fall 1990), p.13

184. A number of confidential sources have stated independently that they have always believed there has been, at the very minimum, a lack of will on the part of the Irish to suppress terrorist activities. Indeed, Eire has been most unwilling to extradite terrorists to Great Britain, and there

appears to be very little cooperation. One source explained the perception of cooperation is misleading by citing an example. The Garda would call the RUC and inform them that a van with a bomb in it was entering Ulster, but would wait until about a half-hour before the scheduled bombing to call. Therefore, the RUC was unable to locate the vehicle and dismantle the device or otherwise prevent the terrorist act.

185. Paul Wilkinson,ed., British Perspectives on Terrorism, *op. cit.*, p.117

186. n.a., "Northern Ireland: An Anglo-Irish Dilemma?", Conflict Studies #185, London: ISC (March 1986) p.21

187. HOLMES stands for Home Office Large and Major Enquiry System; FACES stands for Facial Analysis Comparison and Elimination System.

188. A good account of this and many other antiterrorist incidents can be found in James Adams, Secret Armies, *op. cit.*

189. Richard Clutterbuck, "Terrorism and the Security Forces in Europe", Army Quarterly and Defence Journal, vol. 111 (January 1981) p.22

190. COBRA consists of the Home Secretary, BSS, SIS, the Minister of Defence, the police, the Foreign and Commonwealth Office (FCO), and the SAS. There are some 15 staff and 20 special advisers to COBRA, which is chaired by the Home Office. See Lt.-Col. T. Smith, "Counter Terrorism: Administrative Response in the United Kingdom", Public Policy and Administration, 2:1 (Spring 1987) p.50

191. Adams, Secret Armies, p.170. There are numerous reports that the SAS executed the terrorists after they surrendered. Equally important, this has not caused any crisis for the government, as the operation was quite popular.

192. Neil C. Livingstone, "States in Opposition: The War Against Terrorism", Conflict, 3:2,3 (1981) p.132

193. Stephen Segaller, Invisible Armies: Terrorism Into the 1990s, London: Michael Joseph, 1986, p.156

194. Paul Wilkinson, British Perspectives on Terrorism, p.4

195. n.a., "Northern Ireland: Problems and Perspectives", Conflict Studies #135, London: ISC, 1982, p.7

196. *Ibid.*, p.13

197. *Ibid.*, p.21

198. F.E.C. Gregory, "The British Police and Terrorism", in Paul Wilkinson, ed., British Perspectives on Terrorism, p.113

199. Stephen Segaller, Invisible Armies: Terrorism Into the 1990s, p.39

200. Jim Smyth, "Stretching the Boundaries: The Control of Dissent in Northern Ireland", Terrorism: An International Journal, 11:4 (1988) p.298

201. *Ibid.*

202. 'Slab' earned his name by his nasty practise of dropping large chunks of cement on his victims. See James Adams, "The Financing of Terror", TVI Report, 7:3 (1987) p.33

203. *Ibid.*, p.33

204. *Ibid.*

205. Stephen Segaller, Invisible Armies: Terrorism Into the 1990s, p.169

206. Richard Clutterbuck, Terrorism, Drugs and Crime in Europe After 1992, p.80

207. United States, Defense Intelligence Agency, Terrorist Group Profiles, USGPO, 1988, p.51

208. G. Davidson Smith, Combating Terrorism, *op. cit.*, p.84; see also Yonah Alexander and Kenneth A. Myers, eds., Terrorism in Europe, New York: St. Martin's Press, 1982, p.42

209. G. Davidson Smith, Combating Terrorism, p.84

210. Stephen Segaller, Invisible Armies: Terrorism Into the 1990s, p.48

211. Defense Intelligence Agency, Terrorist Group Profiles, p.51

212. *Ibid.*, p.58

213. G. Davidson Smith, "Issue Group Terrorism: Animal Rights Militancy in Britain", TVI Journal, vol. 5 (Spring 1985) p.45. The attempts were also claimed by the Animal Rights Militia, the Angry Brigade, and INLA.

214. G. Davidson Smith, Combating Terrorism, p.148

215. Just prior to the Falklands War, a BSS officer travelled to Buenos Aires to add some secure communications equipment to the British embassy. On the way back to Great Britain, he stopped in 'Bandit Country' in the southern part of Ulster and constructed some complicated listening posts. BSS was expanding its role in the province. Confidential information.

216. Patrick Brogan, The Fighting Never Stopped, p.383. This figure is presumably in 1983 pound values; regardless, it shows the enormous costs of countering terrorism in this region.

217. "Aviation Security Remains a Top Priority", ICAO Journal, 46:7 (July 1991) p.45

218. Paul Wilkinson, Terrorism and the Liberal State, p.281. See also, Paul Wilkinson, "State-Sponsored International Terrorism: The Problems of Response", World Today (London) 40:7 (July 1984) p.297

219. Wm. Gutteridge, ed., "Libya: Still a Threat to Western Interests?", Conflict Studies #160, London: ISC, 1984, p.25

220. Keith Jeffery, "Intelligence and Counter-Insurgency Operations: Some Reflections on the British Experience", Intelligence and National Security, 2:1 (Jan. 1987) p.132

221. Donna M. Schlagheck, "The Superpowers, Foreign Policy, and Terrorism", in Charles W. Kegley, Jr., ed., International Terrorism: Characteristics, Causes, Controls, New York: St. Martin's Press, 1990, p.173

222. Bruce Hoffman, "Right-Wing Terrorism in Europe", Orbis, 28:1 (Spring 1984) p.25

223. Keith Maguire, "Republican Terrorism in Northern Ireland", Armed Forces, 7:11 (November 1988) p.516-517

224. Steve Bruce, "Northern Ireland: Reappraising Loyalist Violence", Conflict Studies #249, London: RISCT (March 1992) p.17

225. "Northern Ireland: An Anglo-Irish Dilemma?", Conflict Studies #185, London: ISC (March 1986) p.25

226. John B. Wolf, Antiterrorist Initiatives, New York: Plenum Press, 1989, p.120

227. Jim Smyth, "Stretching the Boundaries: The Control of Dissent in Northern Ireland", Terrorism: An International Journal, 11:4 (1988) p.300-301

228. Paul Wilkinson, Terrorism and the Liberal State, p.163

229. Christopher Hewitt, The Effectiveness of Anti-Terrorist Policies, New York: University Press of America, 1984, p.44

230. "Northern Ireland: An Anglo-Irish Dilemma?", Conflict Studies #185, London: ISC (March 1986) p.17

231. The ALF has an affiliated chapter in Canada.

232. G. Davidson Smith, "Political Violence in Animal Liberation", Contemporary Review, 247:1434 (July 1985) p.26

233. Richard Clutterbuck, Terrorism and Guerrilla Warfare, London: Richard Clay Ltd., 1990, p.175-176

234. Paul Wilkinson, Terrorism and the Liberal State, p.148-149

235. G. Davidson Smith, Combating Terrorism, p.248. The Vienna Convention on Diplomatic Relations, Article 29, states: "The person of the diplomatic agent shall be inviolable. He shall not be liable to any form of arrest or detention." See, W. Michael Reisman and James E. Baker, Regulating Covert Action, New Haven, CT: Yale University Press, 1992, p.37

236. H.H. Tucker, ed., Combating the Terrorists: Democratic Responses to Political Violence, n.p.

237. Richard Clutterbuck, Terrorism and Guerrilla Warfare, p.48

238. Neil C. Livingstone, Terrell E. Arnold, eds., Fighting Back: Winning the War Against Terrorism, Lexington, Mass.: D.C. Heath & Co., 1986, p.231

239. G. Davidson Smith, Combating Terrorism, p.197

240. For a list of incidents, see Defense Intelligence Agency, Terrorist Group Profiles, 1988; and various State Department documents.

241. The Economist, March 31, 1990, pp. 19-20, cited in Bernard Schechterman and Martin Slann, eds., Violence and Terrorism, 91/92, Guilford, CT: The Dushkin Publishing Group, 1991, p.41

242. "Northern Ireland: Reappraising Republican Violence", Conflict Studies #246, London: RISCT (Nov.-Dec. 1991) p.8-9

243. Richard Clutterbuck, Terrorism, Drugs and Crime in Europe After 1992, p.88

244. John E. Finn, "Public Support for Emergency (Anti-Terrorist) Legislation in Northern Ireland: A Preliminary Analysis", Terrorism: An International Journal, 10:2 (1987) p.122

245. Stephen Segaller, Invisible Armies: Terrorism Into the 1990s, p.271

246. G. Davidson Smith, "Political Violence in Animal Liberation", Contemporary Review, 247:1434 (July 1985) p.30

247. G. Davidson Smith, Combating Terrorism, p.195. The book does not mention the date except to say that its creation was "recent". The author has determined the creation year through other sources.

248. Michael Zander, The Police and Criminal Evidence Act 1984, London: Sweet & Maxwell, 1985, Section 76.

249. "Northern Ireland: An Anglo-Irish Dilemma?", Conflict Studies #185, London: ISC (March 1986) p.1

250. Richard Clutterbuck, Terrorism, Drugs and Crime in Europe After 1992, p.82

251. "Understanding Northern Ireland", PPTV, May 12, 1993. Loyalist slogans included, "Ulster Says No", and "Iron Lady: You Will Melt From the Heat of Ulster".

252. Stephen Segaller, Invisible Armies: Terrorism Into the 1990s, p.155; original emphasis.

253. Bruce George, M.P., rapporteur, "Working Group on Terrorism: Final Report", Brussels: North Atlantic Assembly Papers (February 1987) p.22

254. Robert Oakley, "International Terrorism", Foreign Affairs, 65:3 (1987) p.619. This occurred within the framework of six EC Foreign Ministers. See also, George, rapporteur, "Working Group", p.23

255. Leonard B. Weinberg, Paul B. Davis, Introduction to Political Terrorism, New York: McGraw-Hill, 1989, p.185

256. One author claims the incident was a plot by Israeli intelligence to discredit British security; the article also claims that the UFF does not exist. See Philip Jenkins, "Under Two Flags: Provocation and Deception in European Terrorism", Terrorism: An International Journal, 11:4 (1988) p.276-280

257. Bruce George, rapporteur, "Working Group on Terrorism: Final Report", p.27. Margaret Thatcher would later say Hindawi "had clear links with the Syrian Embassy and Government". See Margaret Thatcher, The Downing Street Years, New York: HarperCollins Publishers, 1993, p.510

258. Christopher Hewitt, "The Costs of Terrorism: A Cross-National Study of Six Countries", Terrorism: An International Journal, 11:3 (1988) p.173

259. Patrick Brogan, The Fighting Never Stopped, p.386. 55 people were wounded, and the IRA apologized for the attack. A number of attacks by the IRA occurred in Germany against British and German targets. One bomb in March wounded 31, including 27 Germans. See H.H. Tucker, ed., Combating the Terrorists: Democratic Responses to Political Violence, *op. cit.*, p.185

260. Richard Clutterbuck, Terrorism, Drugs and Crime in Europe After 1992, p.88-89

261. O.P. St. John, Air Piracy, Airport Security & International Terrorism: Winning the War Against Hijackers, New York: Quorum Books, 1991, p.181

262. Neil C. Livingstone, The Cult of Counterterrorism: The "Weird World" of Spooks, Counterterrorists, Adventurers, and the Not Quite Professionals, Lexington: D.C. Heath & Co., 1990, p.139. The captured weapons included: 20 SAM-7s; 16 12.7mm heavy machine guns; 975 AK-47s; 12 82mm MP41 mortars; 10 RPG-7s; 320,000 rounds assorted ammunition; 984 mortar shells; 4274 AK-47 magazines; 8 Herstal assault rifles; 194,000 rounds 7.62mm ammunition; 782 7-kilo packs of Semtex; and 1976 electronic detonators.

263. See, for example, Schechterman and Slann, eds., Violence and Terrorism, 91/92, p.41; taken from The Economist, March 31, 1990, pp 19-20.

264. This account is from a highly-placed source who requested anonymity.

265. James Adams, Secret Armies, p.246-247. See also Defense Intelligence Agency, Terrorist Group Profiles, (1988), p.59

266. A good summary exists in J.D. Jackson, "The Northern Ireland (Emergency Provisions) Act 1987", Northern Ireland Legal Quarterly, 39:3 (Autumn 1988) p.235*ff*

267. Richard Clutterbuck, Terrorism and Guerrilla Warfare, p.43

268. Peter J. Sacopulos, "Terrorism in Britain: Threat, Reality, Response", Terrorism, 12:3 (1989) p.157

269. John E. Finn, Constitutions in Crisis: Political Violence and the Rule of Law, p.107

270. David Bonner, "Combating Terrorism in the 1990s: The Role of the Prevention of Terrorism (Temporary Provisions) Act 1989", Public Law, (Autumn 1989) p.448

271. Patrick Brogan, The Fighting Never Stopped, p.383

272. For a good account of the event, see James Adams, Secret Armies.

273. Confidential interview.

274. "Northern Ireland: Reappraising Republican Violence", Conflict Studies #246, London: RISCT (Nov.-Dec. 1991) p.16

275. O.P. St. John, Air Piracy, Airport Security & International Terrorism, p.174. For a detailed look at the bombing and the subsequent investigation, see Steven Emerson and Brian Duffy, The Fall of Pan Am 103, London: Futura Publications, 1990.

276. Paul Wilkinson, "The Lessons of Lockerbie", Conflict Studies #226, London: RISCT (December 1989) p.10

277. See Paul Wilkinson, "Terrorist Targets and Tactics: New Risks to World Order", Conflict Studies #236, London: RISCT (Dec. 1990) p.7-10

278. Wm. R. Nelson, "New Developments in Terrorist Trials in Northern Ireland", Political Communication and Persuasion, vol.7 (July/Sept 1990) p.176

279. Richard Clutterbuck, Terrorism, Drugs and Crime in Europe After 1992, p.89.

280. Eunan O'Halpin, "Anglo-Irish Security Cooperation: A Dublin Perspective", Conflict Quarterly, vol.10 (Fall 1990) p.16

281. Paul Wilkinson, "Terrorist Targets and Tactics: New Risks to World Order", Conflict Studies #236, p.13

282. Paul Wilkinson, "The Lessons of Lockerbie", Conflict Studies #226, p.10

283. David Bonner, "Combating Terrorism in the 1990s: The Role of the Prevention of Terrorism (Temporary Provisions) Act 1989", Public Law, (Autumn 1989) p.440

284. Richard Clutterbuck, Terrorism, Drugs and Crime in Europe After 1992, p.81

285. *Ibid.*

286. Donna Schlagheck and James L. Walker, "Democratizing Nations and Terrorism: The Effect of Political Violence on Civil Liberties", Current World Leaders, 35:2 (April 1992) p.291

287. John E. Finn, Constitutions in Crisis: Political Violence and the Rule of Law, p.118. The author states that the Act became permanent. In fact, it is renewable every five years, the latest renewal occurring in March 1994. The 1994 debate occurred at precisely the same moment that the IRA attacked Heathrow airport with mortars. See "Mortar rounds fired at Heathrow airport", Winnipeg Free Press, March 10, 1994, p.A15 (AP).

288. Patrick Brogan, The Fighting Never Stopped, p.384. The No-Go areas were re-established in the late 1980s, although not to the same degree as the early 1970s.

289. C.J.M. Drake, "The Provisional IRA: A Case Study", Terrorism and Political Violence, 3:2 (Summer 1991) p.55

290. "IRA ties net pair jail", Winnipeg Free Press, August 21, 1990, p.16. The names of the two were Richard Johnson (US), and Martin Quigley (Eire).

291. Wm. R. Nelson, "New Developments in Terrorist Trials in Northern Ireland", Political Communication and Persuasion, vol.7 (July/Sept. 1990) p.168. This strategy, although it has never worked, has nevertheless been a small part of government policy for decades.

292. Joanne Wright, Keith Bryett, "Propaganda and Justice Administration in Northern Ireland", Terrorism and Political Violence, 3:2, (Summer 1991) p.35

293. Keith Maguire, "The Intelligence War in Northern Ireland", International Journal of Intelligence and Counterintelligence, 4:2 (Summer 1990) p.147-8

294. Confidential interview.

295. "IRA claims blast", Winnipeg Free Press, Aug. 1, 1990, p.24 (AP); "New Targets for Terror", Newsweek, Aug. 13, 1990, p. 42-43; Andrew Phillips, "Hitting a 'soft' target", Maclean's, Aug. 13, 1990, p.32-33.

296. "New Targets for Terror", Newsweek, Aug. 13, 1990, p.43

297. Fenton Bresler, Interpol, London: Penguin Books, 1992, p.276

298. Confidential interview. "The Americans knew who did it", said a senior source, "but they and the British government wanted Libya to take all the blame", possibly to prevent a schism between the West and Syria at a most inopportune time. The British have a saying in counterterrorism called "they'll do", which essentially means that a suspect has been found and the matter can be closed without a complete investigation. This habit is particularly frustrating to police officers, who strongly dislike interference in investigations.

299. n.a., "Northern Ireland: Reappraising Republican Violence", Conflict Studies #246, London: RISCT (Nov./Dec. 1991) p.26

300. *Ibid.*, p.10

301. *Ibid.*, p.15

302. Rt. Hon. Peter Brooke, MP, "Politicians, Soldiers and the Place of the Security Forces", RUSI Journal, 137:2 (April 1992) p.3

303. Confidential interview. There are currently 43 police forces in the UK, with an additional nine or ten non-commercial forces.

304. "A Tide of Terrorism", Newsweek, February 18, 1991, p.35

305. "Royal plot foiled", Winnipeg Free Press, December 16, 1991, p.A3. Nothing is known about the whereabouts of the RPG.

306. "Terror: Iraq's Second Front", Newsweek, January 28, 1991, p.50. The FBI claimed to have prevented "more than five" terrorist attacks in the US alone.

307. Frank G. McGuire, "Gulf Crisis Triggers Security Step-Up", Air Transport World, 28:3 (March 1991), p.57

308. "London police form anti-terror squads", Winnipeg Free Press, May 10, 1991, p.30 (Reuter)

309. "IRA bomb near PM's home knocks policeman off feet", Winnipeg Free Press, January 11, 1992, p.A9; reprinted from the Baltimore Sun.

310. "Major vows IRA arrests", Winnipeg Free Press, January 21, 1992, p.C36; reprinted from the Baltimore Sun.

311. *Ibid.*

312. "Suspected IRA men killed by soldiers 'got their desserts': Protestant leader", Winnipeg Free Press, February 18, 1992, n.p.

313. Andrew Phillips, "Spying on the Spies", Maclean's, February 8, 1993, p.34. BSS received the new role in May, 1992. See also, "Scotland Yard, MI5 wrangle in public over who should lead fight against IRA", Winnipeg Free Press, April 25, 1992, p.A11 (Paul Routledge, London Observer Service); and "New anti-IRA chief draws fire", Winnipeg Free Press, May 9, 1992, p.A16 (Baltimore Sun).

314. "Veil of secrecy lifted from MI-5", Winnipeg Free Press, July 17, 1993, p.C11

315. The UDR merged with the Royal Irish Rangers in July, 1992. See "Prince meets troops", Winnipeg Free Press, November 2, 1992, p.A5

316. "The new outlaws", The Economist, August 15, 1992, p.46; and "Ulster's largest Protestant extremist group outlawed", Winnipeg Free Press, August 11, 1992, p.A5 (Washington Post).

317. "Roadblocks set up", Winnipeg Free Press, December 7, 1992, p.A4

318. "PM vows no rest for IRA killers", Winnipeg Free Press, March 24, 1993, p.A5

319. "Britain wants suspects to sing", Winnipeg Free Press, October 7, 1993, p.C10.

320. "Spy in the sky", Winnipeg Free Press, June 15, 1993, p.A9. The Westinghouse Skyship 600 is still undergoing testing. See Air Forces Monthly, July 1994, p.27

Abbreviations: Great Britain

PMO	Prime Minister's Office
FO	Foreign Office
HO	Home Office
SY	Scotland Yard
SCS	Serious Crimes Squad
Metro	Metropolitan Police (London)
RPG	Royalty Protection Group
SPG	Special Patrol Group
DPG	Diplomatic Protection Group
CLP	Central London Patrol
DoD	Department of Defence
SAS	Special Air Service
SB	Special Branch
BSq	Bomb Squad
CCU	Civil Contingencies Unit
COBRA	Cabinet Office Briefing Room
JOC	Joint Operations Centre
JIC	Joint Intelligence Committee
JIO	Joint Intelligence Organization
BSS	British Security Service (MI5)
SIS	Secret Intelligence Service (MI6)
GCHQ	Government Communications Headquarters
MIS	Ministerial Steering Committee on Intelligence and Security
MSD	Management Services Division
DoT	Department of Transport
ASB	Aviation Security Branch
AEA	Atomic Energy Authority
NRC	National Reporting Centre
A11	(surveillance)
D11	(marksmen)
C7	Technical Support Unit
NCIU	National Criminal Intelligence Unit
NDIU	National Drug Intelligence Unit
Comacchio	Comacchio Group
SBS	Special Boat Squadron
M&AW	Mountain & Arctic Warfare Cadre
TIGER	Terrorist Information Gathering, Evaluation and Review
SOI	Special Operations International
T8	Physical Protection - Buildings
C13	Antiterrorist Squad
C11	
C5	
MRU	Mobile Reserve Unit
PPS	Personal Protection Squad
ASI	Aviation Security Inspectorate

Figure 1.1: Counterterrorism in Britain, 1968

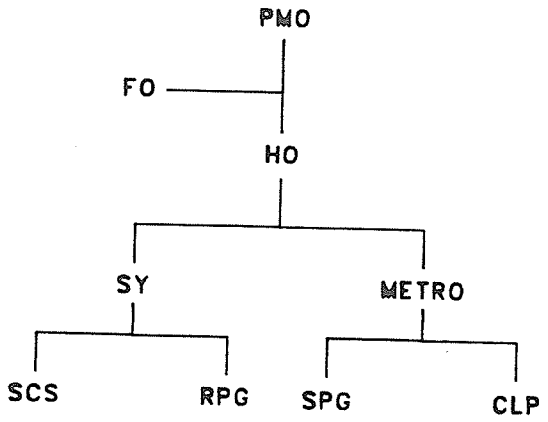

Figure 1.2: Counterterrorism in Britain, 1971

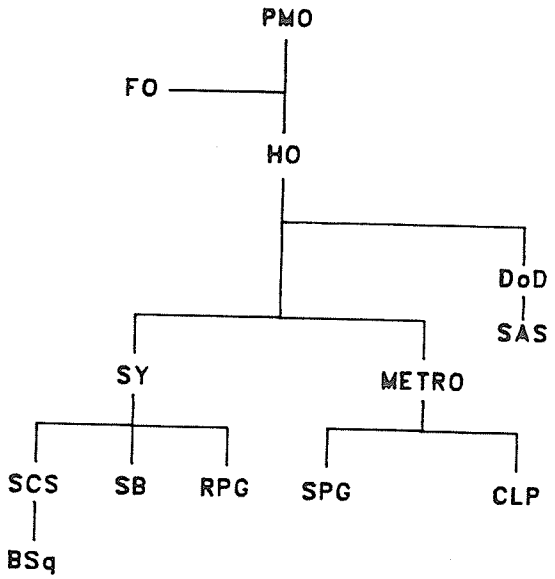

Figure 1.3: Counterterrorism in Britain, 1974

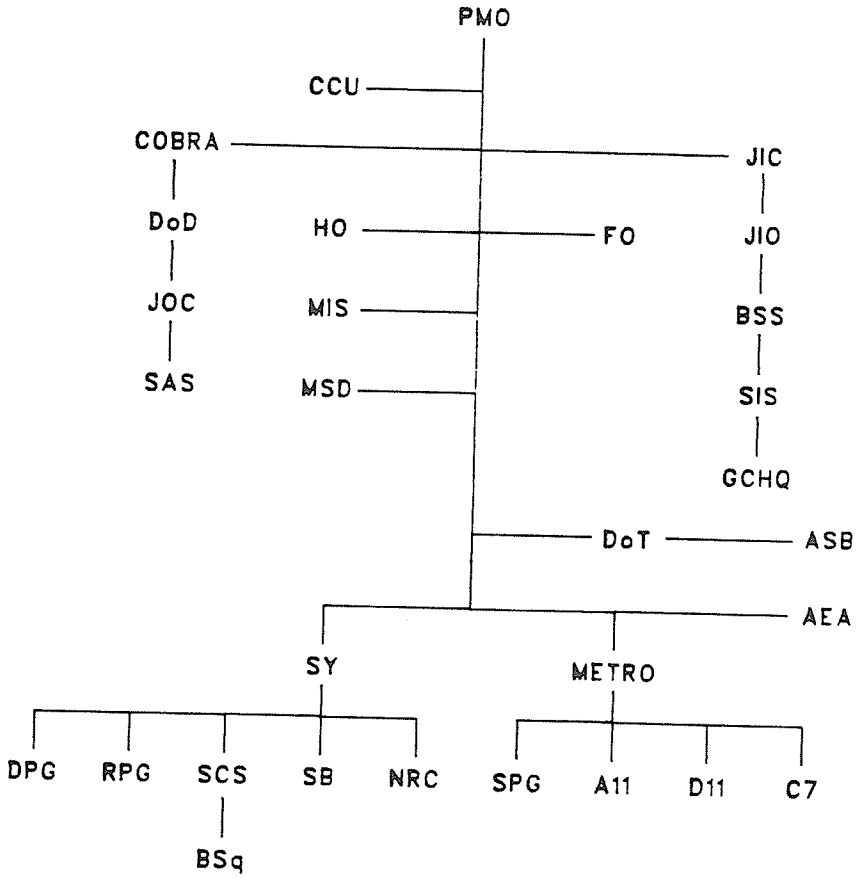

Figure 1.4: Counterterrorism in Britain, 1980

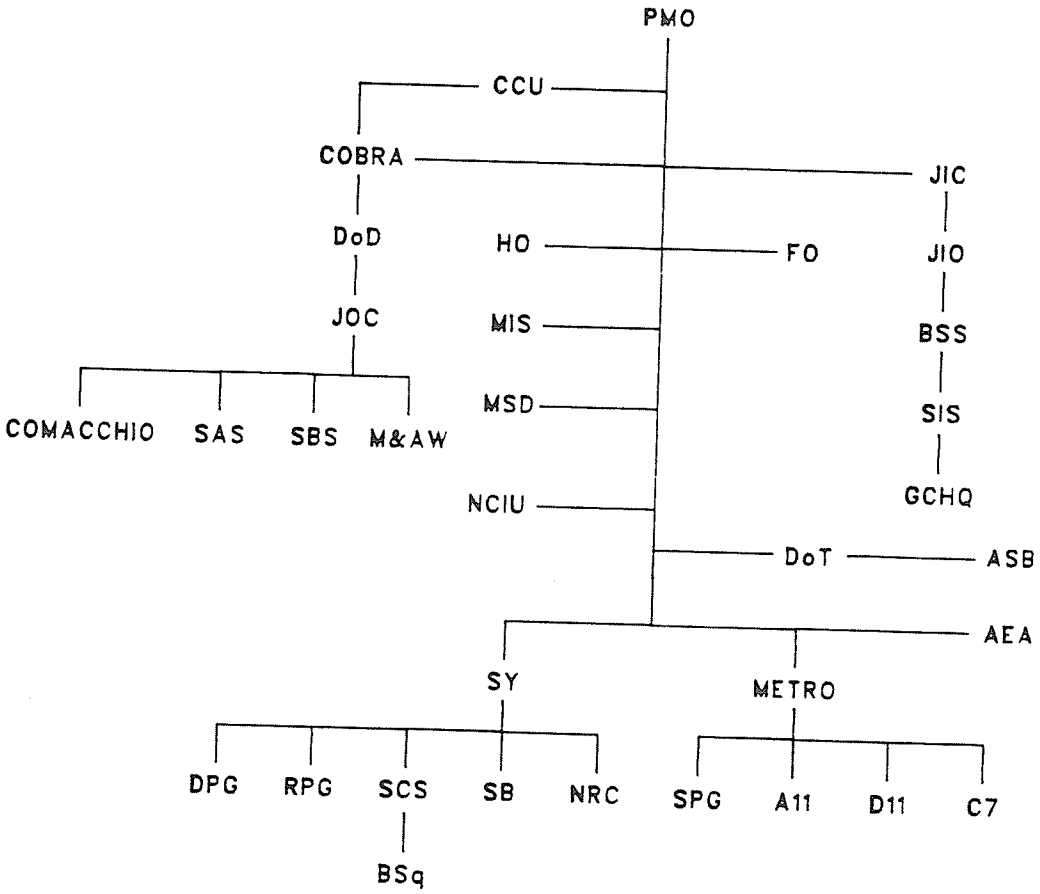

Figure 1.5: Counterterrorism in Britain, 1985

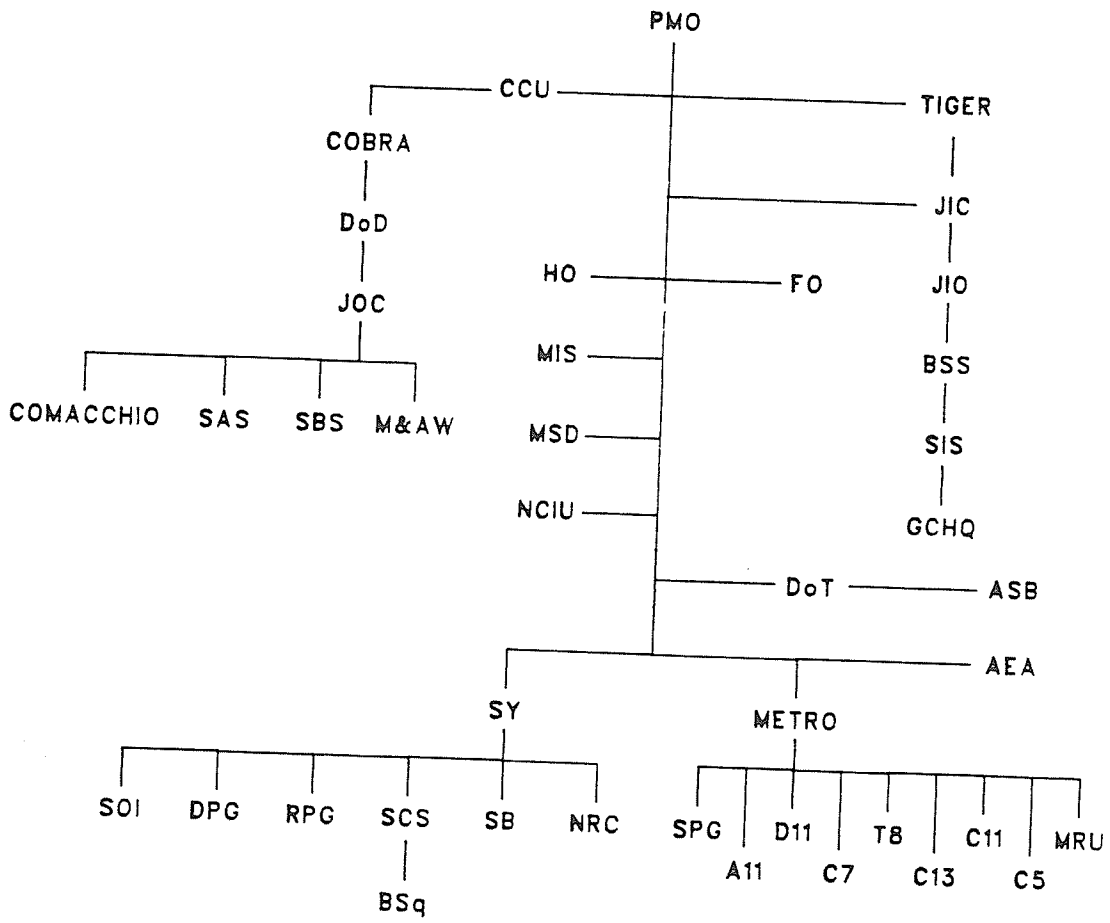

Figure 1.6: Counterterrorism in Britain, 1994

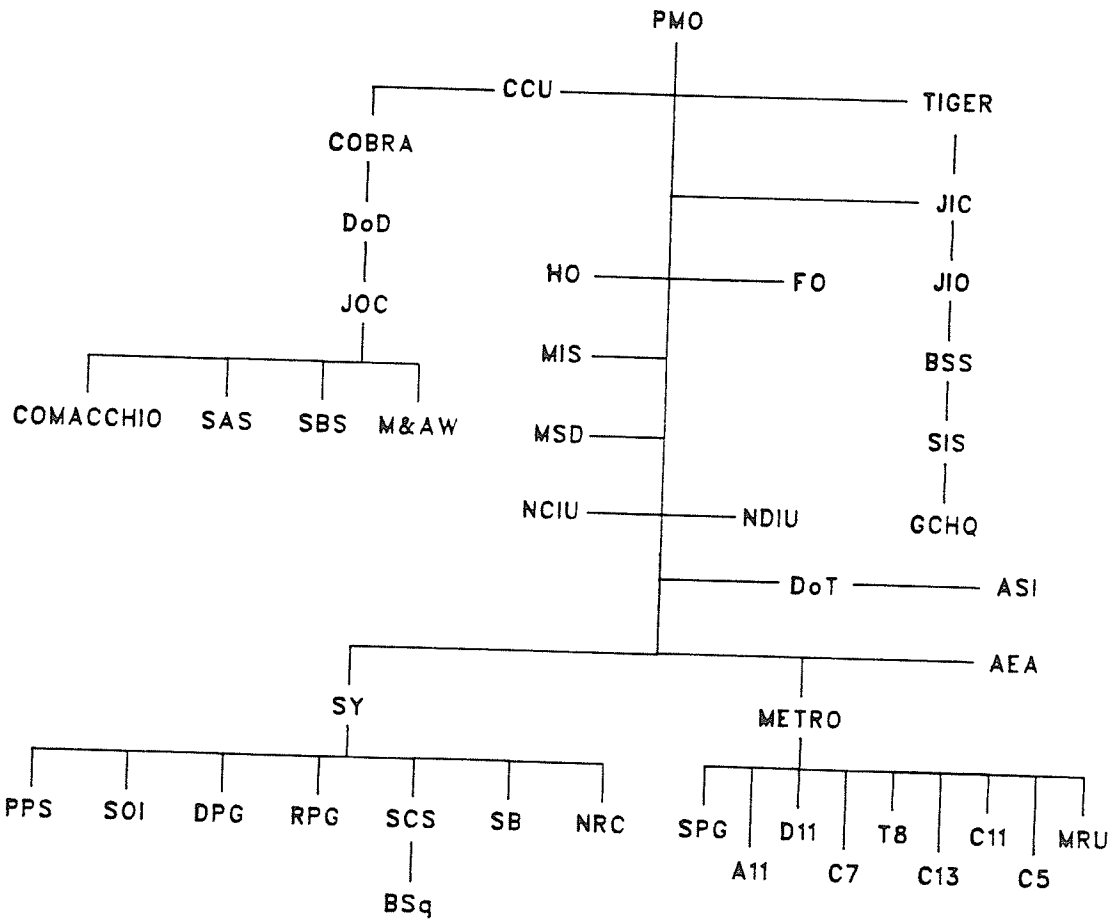

Abbreviations: Ulster

SSNI	Secretary of State for Northern Ireland
RUC	Royal Ulster Constabulary
MRF	Military Reconnaissance Force
DMSU	Divisional Mobile Support Unit
UDR/RIR	Ulster Defence Regiment/Royal Irish Rangers
CID	Criminal Investigations Division
E4A	Special Forces
C19/ARTF	Ant-Racketeering Task Force (Northern Ireland only)
PCU	Plainclothes Unit
SU	Surveillance Unit
DU	Drug Unit
TG	Target Group
MSD	Management Services Division
NCIU	National Criminal Intelligence Unit
DoD	Department of Defence
SAS	Special Air Service
SBS	Special Boat Squadron
Comacchio	Comacchio Group
SB	Special Branch
SPG	Special Patrol Group
PPS	Personal Protection Squad

Figure 1.7: Counterterrorism in Ulster, 1994

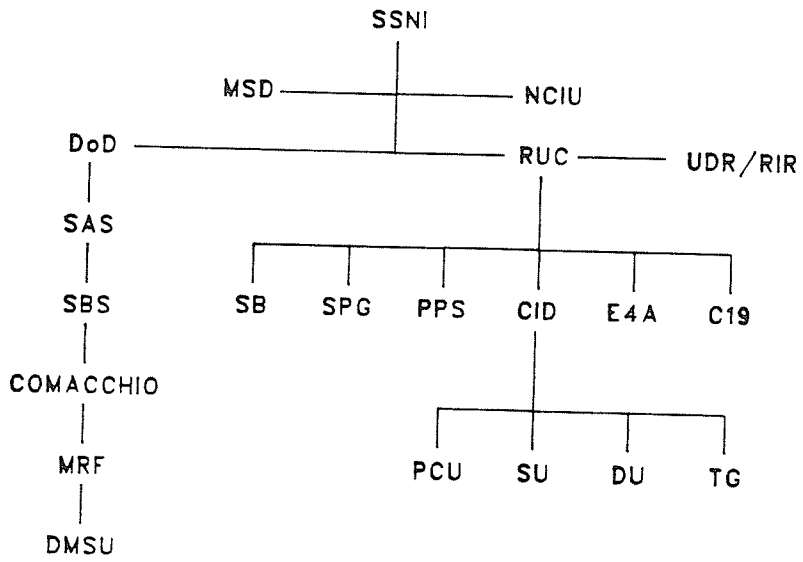

Chapter III: The West German Experience

Background

In contrast to the ancient feud between the Protestant and Catholic Irish and the differences in political aspirations of the two social groups, Germany has had no direct challenge from a nationalist/separatist group from within its borders.[1] The roots of modern terrorism were established thanks to the same influences experienced by France, Great Britain (to a small degree), and the United States. Sartre, Fanon, Marcuse and Marighella contributed to the hostility displayed by rioting students with philosophical works espousing the use of violence to destroy what was perceived as a 'corrupt' system. Consumerism, Vietnam, the Six Day War, a collective national guilt complex for the Holocaust and the geostrategic position of Germany as a bulwark against communist expansionism all combined in the political Left to produce a fringe culture of angst for young radicals. This widespread and sudden phenomenon would produce no answers for the questions asked by the Left, but would result in the formation of terrorist groups that used the slogans of revolution, class warfare, anti-consumerism and other various and sundry excuses to begin a campaign of anarchistic and nihilistic violence. Germany would be forced to respond to the challenge.

Frequent student riots resulted in clashes with police on the streets, but the riot police were efficient in their suppression techniques. Students were not allowed to take over the cities, and many were arrested for their activities. Ulrike Meinhof, an early leader of the German radical Left and member of the youth wing of the Social Democratic Party (SPD), wrote in *Der Speigel* after the police suppressed yet another violent

demonstration,

> . . . we say a man in uniform's a pig, not a human being, so we must tackle him. I mean we mustn't talk to him; it's wrong to talk to these people at all, and of course there may be shooting.[2]

Seven members of the Extraparliamentary Opposition (APO) were arrested for inciting violence through pamphlets, and a further 1900 would eventually be charged for various other illegal activities associated with radical politics. An attack on Hubert Humphrey using pudding was thwarted when the radicals were seen practising for the event.[3] On May 22, 1967, a department store was firebombed in Belgium, and the radical Left gained inspiration. Meinhof wrote:

> If there is a fire somewhere in the near future, if a barracks happens to blow up, if a stand happens to collapse in some stadium, then please don't be surprised. Any more than you are surprised by the bombing of the city centre of Hanoi.[4]

The threat was real, as violence in demonstrations had shown, and there was a clear correlation between violent tactics and the tendencies of the Left. Government interest existed, to be sure, but the involvement of the security forces was unsophisticated and rather limited.

When the Shah of Iran, Reza Pahlavi, visited Germany on June 2, 1967, students launched a violent protest against his presence and his policies. SAVAK security agents thrashed the students with staves while the German police watched.[5] In the confusion, Benno Ohnesorg, 26, was allegedly killed by a bullet from a German policeman's gun. Gudrun Ensslin, another senior member of the extreme Left, reacted to the shooting with a clear warning to the government:

> This fascist state means to kill us all. We must organize resistance. Violence is the only way to answer violence. This is the Auschwitz generation, and there's no arguing with them![6]

The incident would give rise to a terrorist movement named for the date: the 2 June Movement, led by Dieter Kunzelmann.

The government was not completely uninformed regarding the growing militancy of the extremists, but displayed a degree of amateurism with the use of agents. One case is worthy of mention, since it displays the lack of sophistication exhibited by the state-level security service. Peter Urbach, an agent for the Berlin *Landesamt für Verfassungschutz* (LfV, or Office for the Protection of the Constitution -- state level), had successfully penetrated part of the radical underground, demonstrating that the German government was actively involved with gaining intelligence about the growing threat.[7] The information gleaned to date, however, was incomplete. Embroiled in a labour dispute with the LfV, Urbach retained the services of legal counsel; the lawyer was Horst Mahler, a supporter of leftist violence, future defender of terrorists, and a future leader of the Red Army Faction (RAF). The flow of information to the government ceased.[8]

The political radicals had other reasons for demonstrating against the policies of Germany and its allies. Internally, the Grand Coalition of 1966 led by Willy Brandt proposed a sweeping change in security policy, allowing for greater powers for the executive in three phases depending on the threat. First, a 'state of defence' (*Verteidtgungsfall*) could be announced in the event of internal agitation which would allow the use of the *Bundeswehr* to control demonstrations. Second, a 'state of tension' (*Spannungsfall*) would denote an escalation beyond riots. Third, an internal state of emergency (*innerer Notstand*) could be declared by the executive without debate in the *Bundestag*, or lower house.[9] These

security measures were combined with allowances for greater intrusive powers into communications, both by wire and by mail, in Article 10 of the *Grundgesetz,* or the G-10 law. The radical Left vehemently opposed such powers for the central government, but they entered into law regardless in the summer of 1968.[10]

That same year, the *Bundeskriminalamt* (BKA, or Federal Criminal Office) managed to penetrate the Young Socialists' Association in Berlin using an agent named 'Michael Hagen', whose real name was Michael Grünhagen.[11] Posted to the position of Vice-Chair of the organization, Grünhagen was able to track the activities and aspirations of the radical group, thus demonstrating the degree of interest that the German government had in the Left. However, the BKA misjudged the sources of the terrorists' recruitment efforts, and there was little evidence to link any person with a larger, evolving conspiracy. The Interior Ministry, the BKA and the BfV, along with their *Länder* counterparts, had no sources within any terrorist movements, nor was information being collated at a central agency.[12] The state and federal governments had been watching the extreme Left, but had not anticipated the rise of terrorism from the fringe. Like their British counterparts, the Germans were in a mode of 'benign neglect' regarding the potential for violence. That policy would fail miserably and cost dearly in human lives and property damage, albeit on a much smaller scale than Great Britain's experience.

The Beginning: 1968-1972

The beginning of modern terrorism in Germany occurred on April 2, 1968, when a department store was firebombed in Frankfurt.[13] Andreas

Baader and Gudrun Ensslin, among others, continued with a series of similar attacks aimed at consumerism in German society and the supposed negative influences of modern life. Wiretaps were "routine" at the time, and the German police were instructed to track down the offenders with haste.[14] That same month the police were able to locate Baader and Ensslin, and the two were charged with arson and were remanded in custody.[15] Baader became a cult figure of sorts for the radical Left, helped in part by the sympathetic rantings of Meinhof in her new journalistic residence, the radical paper *Konkret*, which was partially funded by the USSR. Baader would become a symbol of the new Robin Hood image created by leftist propaganda, and that effort would create opportunities for the recruitment of younger activists.

By 1969 the Red Army Faction (RAF) increased its activities, committing 48 offences for the year.[16] The East German Ministry of State Security (MfS), Section XXII, gave employment, sanctuary and identification for RAF members, and the HVA supported the terrorists on foreign soil.[17] Neo-Nazis from Germany joined their leftist counterparts in training camps supplied courtesy of the PLO in Jordan and Lebanon, although the RAF was not favoured because of drug and alcohol abuse and sexual promiscuity.[18] Terrorism appeared to be a problem associated with the East-West conflict, but since the levels of violence were low and the German political culture frowned on oppression, little was done to combat the terrorists. The BKA, responsible for all central information regarding criminal activity in Germany, only had 933 employees and a budget of DM22 million.[19] Other intelligence organs were more concerned with foreign penetration of Germany and the desperate search for intelligence from the East. The

individual *Länder* retained the role for counterterrorism, even though the terrorists were not attached to any particular region or country. That decentralized structure would permit the growth of terrorism in the future.

Andreas Baader was rearrested on April 4, 1970, and detained in prison for a number of offences, including bail-jumping and various activities related to terrorism. The German government allowed Baader to do research at the Social Affairs Institute, demonstrating a reluctance by the government to treat the terrorist in any way that might give the Left a reason to create a martyr. Regardless, on May 14 Ulrike Meinhof and Horst Mahler staged a daring prison break, freeing Baader from captivity.[20] Following a series of bank robberies which netted DM220,000 for the newly-formed RAF, Baader and his comrades escaped to Jordan via Damascus for the purpose of joining a Fatah terrorist camp.[21] The RAF received valuable training at their camp from Abu Hassan, better known as Ali Hassan Salameh, who was "regarded as the most wanted terrorist in the world",[22] and established contacts with the USSR, Cuba, South Yemen, Algeria, the PLO and the PFLP.[23] The RAF received training in terrorist techniques, secretive living and intelligence gathering, construction of bombs, firearms usage, and police avoidance tactics. This would make the group more difficult to capture and more dangerous as a long-term threat to Germany.

According to figures from the *Bundesministeruim Des Innern* (BMI, or Interior Ministry), the number of terrorist offences in 1970 grew by 144% from the previous year.[24] There was no special training for German police officers to provide them with the necessary techniques for battling terrorists.[25] The foreign connections being established by the RAF and

various neo-Nazi groups "were not taken very seriously" by the BKA, BfV, BND or any other intelligence organs.[26] However, there were two minor alterations in German security in 1970. First, the BKA budget increased by 52%, allowing for greater expenditures on manpower and technology.[27] Second, the German government changed Article 111 of the Criminal Code to allow for a ban on public exhortations to commit violent offences, thus giving the police a small tool with which to attempt a greater degree of control over violent riots and supporters of terrorism.[28] Nevertheless, grand policy remained unchanged, with benign neglect being the rule of thumb for policy-makers. It was clear that the Germans did not regard terrorism as a serious problem requiring dramatic changes in domestic law or alterations in the flow of intelligence. This attitude would not change in the immediate future.

The number of terrorist offences by domestic groups dropped in 1971. Germany still had no effective specialized units for resolving hostage/barricade incidents.[29] Attacks on targets by Palestinian terrorists "were regarded as isolated incidents",[30] prompting the accurate perception that Middle Eastern terrorists were not dealt with in the same fashion as leftist radicals within German borders. The RAF re-emerged for the armed struggle against the government, this time trained to a higher degree than before. Another group, the *Revolutionaire Zellen* (Revolutionary Cells, or RZ) was formed, posing a substantial threat to the government because of its denunciation of the educated RAF and the perceived élitism of that group, because of obvious anarchistic leanings, and because they were much better at striking once and disappearing completely.[31]

Germany was not completely ignorant of the problem it was facing with the growth in terrorism. Dr. Horst Herold was promoted to the head of the BKA and would oversee the eventual transformation of that agency into a more powerful organ than had been foreseen. Hans-Dietrich Genscher, then the Minister of the Interior, insisted that a process be started wherein all relevant information be transferred from the *Länder* LKA offices to the centralized BKA. The BKA budget increased to DM54.8 million and personnel levels reached 1113. Germany was on a cautious track of centralization.[32]

On July 15, 1971 the police launched Operation Pike, which effectively meant the complete containment of northern Germany by a force of 3000 police officers.[33] The operation was a failure, as the Germans did not account for the amount of support amongst the population for the RAF and for the sophistication they had achieved as a result of their overseas training. The event capped a 425-day effort on the part of the police to find and arrest the RAF, and they would be forced to scale back their search. The RAF had succeeded in escaping the police dragnet.[34] Later that fall, when a policeman was killed by the RAF, a call went out to the public to stop sympathizing with the terrorist group. Hamburg's Mayor Schulz exclaimed to a large audience,

> If the Baader-Meinhof group turns out to be responsible for this murder, we should now at least stop regarding them as an association with political aims. They are wholly criminal in the truest sense of the word.[35]

Political pressure began to be exerted on the German government to do something about the ravages of terrorists on German soil. The hesitant, cautious Germans were forced to respond.

By 1971 a series of legal reforms were made by the Germans in order to better deal with terrorism. Legislation was passed to deal with criminal activities perpetrated for political purposes, including air piracy; hostage-taking for the purpose of blackmail; funding of terrorist organizations; public exhibition or glorification of violence; endorsement of criminal acts; inducement to criminal acts; rewarding or approving of criminal acts or threats; threats; feigning criminal acts; and failure to report criminal acts particularly when terrorists were suspected.[36] The penalties for certain kinds of terrorist offences, such as hostage-taking, kidnapping, hijacking, and hijacking with manslaughter were increased; the latter two offences having mandatory prison terms of five years and ten years respectively.[37] Overall, the German government in 1971 showed a greater willingness to equip the BKA properly for counterterrorism, placed greater emphasis on longer jail sentences for convicted terrorists, and began the process of revising the decentralized federal state of Germany into a more centralized structure when dealing with terrorists. Grand policy remained flexible, particularly in instances where foreign terrorists or countries were involved, and the German government would attempt to remain in this flexible position for many years to come.

By 1972 the German government was attempting to maintain its position that terrorism would be handled by the police in regular criminal investigations. Nevertheless, the BfV was strengthened to some degree in order to assist with penetrating and defeating terrorist groups.[38] BKA staff levels increased to 1770[39], indicating a willingness by the government to expend more resources on its overall counterterrorism effort. Terrorists existed everywhere, but the government was unable to

produce accurate intelligence to locate the radicals or their best sources of recruits. High on the list, however, were all organizations and persons with leftist ideologies. On January 28, 1972, Willy Brandt announced the Radicals Edict, which banned any person with violent intentions from holding a job in the German civil service. Called the Job Ban by some, Brandt declared the implementation of the *Berüfsverbot* by stating:

> If a candidate belongs to an organization which pursues aims inimical to the constitution, that membership is grounds for doubting whether he will always support the basic principles of free democracy. As a rule, these doubts will justify rejection of the application for a post.[40]

In this fashion, Brandt and his political allies on the Left and Right were able to place restrictions on potential terrorists or sympathizers from entering the public service, were able to effectively investigate these suspects, and were also able to exclude members of the Communist party and other radical political groups from the political process. Later that May, a typist in the BKA was arrested for warning a terrorist that he was under surveillance.[41] The case proved the necessity for the *Berüfsverbot.*

Confusion in government policy was evident in 1972, since the police and the intelligence agencies were actively pursuing German terrorists while ignoring Palestinians. By that year, the PLO and a number of its constituent groups had established 23 operations and weapons bases in Germany.[42] When a Lufthansa jet was hijacked on February 22, policy became more evident; the German government immediately conceded to the terrorists' demands, paying $5 million for the return of the aircraft.[43] The mixed signals being sent to terrorists by the German government only encouraged further violence, or at least provided no disincentives; Germany

would have to experience more terrorism in order to muster the political courage to stop the violence.

In the spring and summer of 1972 the Germans were convinced that they had the situation under control. The *Feierabendterroristen*, otherwise known as 'after-hours terrorists', were increasing their limited activities in Frankfurt under the banner of the RZ.[44] The RAF launched a wave of bombings and the government was forced to send an appeal to the public for information, as the BKA had no contribution to make.[45] Within a month most of the RAF was arrested, including the leadership of Baader, Meinhof, Holger Meins, Jan Karl Raspe, Gudrun Ensslin and Gerhard Muller.[46] All but one of the RAF had been arrested by the summer, or so it was believed.[47] In July 1972 the BKA optimistically reported "It is only a question of time now when the last members of the Baader-Meinhof gang. . . will fall into the hands of the police, dead or alive".[48] Dismantled but not destroyed, the RAF would return within a year.

By June of 1972 it was clear to the Germans that some reforms were not only needed, but were long overdue. The BfV received a much broader mandate to complement the BKA, creating a new division tasked solely for counterterrorism. With a budget of DM230 million and a staff of 2500, the BfV became much more prominent in the battle against terrorists.[49] The second change in policy dealt with the federal prosecutor's office, or *Generalbundesanwalt beim Bundesgerichtshof* (GBB), which received the authority to handle all cases in Germany regarding terrorist offences.[50]

The third major change concerned the *Bundesgrenzschutz*, or the Federal Border Guard (BGS), which was thrust into the role of standby police in the *Länder* through a change in the Basic Law. The BGS units

were sent to the *Länder* under the title *Bereitschaftpolizei*, or BSP, and were tasked with assisting in the maintenance of public order in situations where the states failed or needed greater assistance.[51] A search system known as *Beobachtende Fahndung*, or BEFA, was established to cast a wider net in federal searches for terrorism suspects. The federal government was obviously concerned about the amount of terrorism that had occurred in the states and even more concerned that the states were almost completely unwilling to share information. The imposition of the federal force was an embarrassment to the *Länder* and was designed to force greater cooperation in the counterterrorist scene.

Germany was displaying a degree of evolution in its counterterrorism program, not unlike what the UK had been through. Policy toward domestic terrorists was on a clear course away from tolerance or neglect, although the mechanisms were not yet functioning as planned. The basic idea was to replace the decentralized *Länder* system with an efficient federal response. That plan received an unwelcome boost from foreign terrorists; a shock to Germany and to the world.

On September 5, 1972, after receiving logistical support from the RZ[52], the Black September Organization (BSO) attacked the Israeli mission to the Munich Olympics. Organized by Hassan Salameh, the man who had trained so many German terrorists, the BSO killed two athletes immediately, then sought escape through negotiation. The Bavarian police planned a daring rescue attempt at the airport, where a helicopter was waiting for the eight terrorists and their nine Israeli hostages. The German government rejected an offer by the Israeli government to rescue the hostages, preferring instead to have the police handle the matter. When

the police attacked, a firefight ensued, and all the hostages were killed along with one policeman and five terrorists. The rescue operation had been a horrible failure, as the police were outgunned by the terrorists.

Hans-Dietrich Genscher was appalled at the fiasco and immediately launched into a program of reform to prevent another incident of that nature. On September 8, 1972, Genscher ordered the creation of *Grenzschutzgruppe-9*, or GSG-9, modelled after the famous British SAS.[53] The role of GSG-9 was explained as follows:

> The GSG 9 is to be used in the carrying out of police missions of special significance. They may above all be employed in cases when the situation necessitates a single operation, whether openly or in secret, bringing to bear immediate force against violent criminals. This is especially the case when larger, organised groups of terrorists become active. . .[54]

Under the authority of Department P of the BMI, the 188-man force was to combat terrorists in a special fashion in accordance with the necessity of the job and because the police had been unable to apply strong enough force against terrorist groups. Formed into three teams, the Special Combat Teams (SET), the Mobile Assignment Squads (MEK), and the Special Assignment Squads (SEK), the GSG-9 was able to apply itself in operations without the spectre of militarism and could avoid the constitutional ban on foreign operations because of its non-military designation.[55] The unit was intended to be used in situations such as "murder, manslaughter, kidnapping, the taking of hostages and criminal blackmail", which were common terrorist offences.[56]

The creation of specialized units was intended as a message to terrorists that their activities would no longer be tolerated on German soil, and that the radical chic RAF would eventually be crushed by a stronger

set of response mechanisms. The BKA and the BfV were not only spending greater amounts of money and time on terrorism, but were displaying a willingness to centralize the horribly inefficient and decentralized intelligence and police system which had been created by the Allies to prevent a repetition of the Brownshirts. A central thrust of policy, therefore, was to create a better system of information at the top of the chain of command. The Grand Crisis Committee (*Grosser Politischer Beratungskreis*, or GPB) and the Lesser Crisis Committee (*Kleiner Politischer Beratungskreis*, or KPB) were established, designed to include representatives from various government departments and, occasionally, *Länder* heads; the idea was almost a duplicate of the British COBRA system.[57]

Meanwhile, policy had shifted somewhat, from Germany's initial ignorance of the problem despite terrorist activities in other parts of the globe, to an active interest in the problem of non-state violence. The police intelligence units of the BKA and the security intelligence unit of the BfV, however, were mechanisms for internal use, and were therefore quite ineffective for the projection of counterterrorism beyond the borders of Germany. Policy, like so many other European countries, took on a two-track appearance, with domestic terrorists facing the brunt of German state power while foreigners were free to target German interests in other countries. While Germany was prepared to utilize greater force, the response was intended for internal use. For instance, on October 29, 1972, a group of Palestinians hijacked a Lufthansa jet to Zagreb, demanding the release of the three surviving Munich terrorists. Germany conceded to the demands "with surprising alacrity"[58] Over the following five years, some

141 of 150 arrested Palestinian terrorists were released across Europe, a number of which were released by Germany.[59] Firmness in German policy would be driven by internal events, not by the activities of foreigners. Germany showed no desire to become embroiled in foreign squabbles, although it was already involved by the choice of others.

Refining the Response, 1973-1977

The German government had been forced by circumstances to develop a policy of counterterrorism and the proper tools needed to carry out this political objective, although the transitional phase was slow and reflected a genuine hesitancy on the part of the government to create a repressive system. However, by 1973 Germany was facing a greater threat than before. The RAF had re-emerged, much to the chagrin of the optimists in the BKA, and it was joined by the RZ and the 2 June Movement.[60] Official BMI figures for 1973 would show only 70 terrorist offences in total[61], although other figures for 1973 indicate a total of 564 terrorist offences by the Left.[62] In either event, there was a clear need to refine and improve the German counterterrorism structure in order to meet the threat. The German government preferred to use a police agency for its primary response mechanism rather than concentrating power in the hands of intelligence agencies. Legislation in 1973 transferred authority for counterterrorism, drugs and arms smuggling, and centralization to the BKA.[63] Essentially, the BKA became the lead agency for counterterrorism,[64] usurping the authority previously allocated to the individual *Länder*. The BKA established the *Sicherungsgruppe* (Security Group, or SG) to collate, analyze and collect information about

terrorists.[65] It appeared that the federal police had complete control over counterterrorism. However, there were other agencies responsible for carrying out the role of counterterrorism in Germany. The BfV, which was independent of the police and had no powers of arrest, increased its efforts at surveillance and penetration and established a computer data base called NADIS.[66] The *Militärischer Abschirmdienst* (Military Defence Service, or MAD) received a peripheral role of sharing information from its counterintelligence pool with the BfV, although it was not permitted to conduct its own independent investigations.[67] Additionally, the *Bundesnachrichtendienst* (Federal Intelligence Service, or BND) was instructed to share information which had been gleaned from contacts with foreign intelligence services with relevant departments, and was allowed to complete its own independent assessments and analyses of terrorist groups.[68] Finally, the Chancellery established a committee to oversee the operations of the intelligence services, which consisted of weekly meetings between the Chancellor, the Interior and Defence Ministers, and the intelligence organizations themselves.[69]

The shock of the Munich Massacre, combined with persistent terrorist activities from internal groups, had caused the German government to institute a series of reforms within its police and intelligence agencies. The very existence of these specialized groups signalled a transitional phase in German policy wherein the government appeared less willing to tolerate terrorist activities. Grand policy, which is essentially a function of political will, was also starting to change. When a number of RAF prisoners began hunger strikes for the purposes of embarrassing the government, displaying their own power despite imprisonment and to gain

political prisoner status, the German government adopted a policy of 'no concessions'.[70] The hunger strike failed in its objectives, as would others in the future. The formation of specialized groups, the increasing role of intelligence services and paramilitary forces, and a nascent increase in political will on the part of the government all combined to give the impression that Germany was moving away from its former position toward a harder line. The message to the terrorists was that Germany was no longer interested in its unwanted position as a battleground for foreign and domestic terrorist groups. It would, however, take some time before the government could solidify this position.

The Germans had dealt with the terrorist threat by utilizing government powers to create or bolster specialized units designed specifically for counterterrorism. By 1974, 89 members of the RAF were in prison or were awaiting trial for various criminal acts, which created the stimulus needed by the government to begin some dramatic changes to the legal system.[71] A number of the RAF prisoners disrupted criminal proceedings by striking, thereby rendering themselves physically incapable of attending the trial; when they did in fact attend, they were disruptive. In response, the German government changed procedural law. In contrast to the previous legal machinery, the *Gesetz zür Reform des Strafverfahrensrechts* (1. GRStrVer) was instituted in September, 1974, which effectively removed the right of the accused to attend his own trial.[72] Riotous behaviour in court by the accused terrorists and their attorneys was dealt with in December with the *Ergänzungsgesetz*, or the Criminal Procedure (Essential Supplementary Procedures) Act, which reduced the number of lawyers available to the accused to three, with no

collective defence allowances for those attorneys when they wished to defend multiple prisoners.[73] Terrorists had previously hired from 10 to 16 lawyers at the same time, and the lawyers had assisted in disrupting trials. These two laws, Sections 231(a) and 231(b) of the Criminal Code, were designed to ensure the smooth functioning of the courts when faced with terrorists. The legal changes were instituted specifically for terrorists, demonstrating the will of the German government not to be intimidated in court by extremists. The process of trials became much faster than before, ensuring the terrorists were sentenced and received punishment at the earliest possible moment.[74]

The threat of terrorism in Germany was still growing. In 1974 violence from the Left grew by about 150%[75], and 34 neo-Nazi groups with 1350 members were identified, some of them with violent intentions.[76] Three leftist cells were smashed in a raid by the Germans and the Dutch in February, but the fourth group escaped and would execute a spectacular attack the following year.[77] Holger Meins, who died from a self-imposed hunger strike in November, inspired the creation of a terrorist cell in his honour.[78] That same month, Günter von Drenkmann, the President of the Supreme Court, was shot and killed by terrorists who were avenging the legal changes made in the courts, the conviction of Meinhof and the death of Meins.[79] The number of terrorists wanted by the BKA increased from 40 in 1972 to 300 in 1974,[80] but the German intelligence apparatus was still unsure of the number of terrorists belonging to the RZ, which was becoming quite active.[81] The communicative process of terrorism and counterterrorism increased in intensity, and there was little hope for improvement. The Germans would

have to consider harsher measures.

By the end of 1974 the Germans finalized the structural arrangements for GSG-9.[82] Over 200 men were trained in special warfare techniques in a manner strikingly similar to the British SAS. Three distinct sub-units were formed within the overall structure, including the *Mobiles Einsatzkommando* (MEK), the *Spezialeinsatzkommando* (SEK), and the *Präzisionsschützenkommando* (PSK). The MEK was designated as a rapid-response team which could use a variety of vehicles to assist them in any intervention operation, such as in 'hot pursuit' of wanted terrorists. The SEK was trained specifically for missions requiring a high degree of technical ability, such as storming hijacked aircraft. The PSK existed as a backup unit, trained in the same techniques as the other teams, which was responsible for sniping in difficult situations. None of the sub-units existed in isolation, since all men were cross-trained in the identical fashion of the SAS. The GSG-9 became the lead antiterrorist response unit for the entire country, marking a change from the decentralized fashion formerly used for police responses in Germany. The Germans were now completely prepared for a stronger response to terrorist violence.

The terrorist threat to Germany from the extreme Left had not abated, despite the structural modifications to date and the legal machinery put in place to facilitate the criminal trial process. Terrorist attacks and threats from the Left numbered 473 for 1975, almost half that of 1974 but still significant.[83] Furthermore, a top German nuclear scientist was in frequent contact with RAF terrorists, thereby possibly allowing them access to top-secret nuclear information.[84] A group of terrorists managed to steal a supply of mustard gas from a military installation that same year

and threatened to use it on Stuttgart, although the threat was not carried out.[85] Nevertheless, not all the gas was recovered, leading to great speculation that the terrorists were losing inhibitions.[86] Overall, terrorism remained a very serious problem for German authorities.

Two major incidents affecting Germany in 1975 may have had a greater impact on policy and structure than any other combined series of acts. Peter Lorenz, the leader of the Christian Democratic party, was kidnapped on February 27 by the 2 June Movement.[87] The German government capitulated within 72 hours of the kidnapping, releasing five imprisoned terrorists, paying them DM20,000 each, and allowing them safe passage to Aden.[88] Among the released terrorists was Gabriele Kröcher-Tiedemann, who would return to haunt the world later that same year.[89]

The hasty concessions made by the government in that case almost certainly led to the seizure of the German embassy in Stockholm on April 24, 1975 by six RAF terrorists, who demanded the immediate release of a number of imprisoned comrades.[90] Chancellor Schmidt stated in a speech to the *Bundestag* that the terrorist act was "the greatest challenge our constitutional state has faced in its 26 years of history".[91] At a meeting of the *Grosser Politischer Beratungskreis* (GPB, or Grand Crisis Committee), Schmidt stated his position clearly: "Gentlemen, all my instincts tell me that we must not give in".[92] No concessions were made to the Stockholm terrorists, some of whom subsequently perished when their explosives detonated prematurely. The goal of preserving life had not been fulfilled by the German government, but the message was clear to the terrorists: The Germans were no longer in a mood to be victims. No serious attacks of the Stockholm variety occurred against the Germans for another year

and a half.[93]

Clearly recognizing that the hard-line policy taken at Stockholm was popular with German citizens, the subject of counterterrorism became a political issue for the centre-right coalition of the CDU and the CSU. The parties were the first to hold a conference for the purpose of discussing terrorism policy and, of course, for admonishing the SPD for their softer approach. The CDU/CSU created the term *Offensivkonzept*, which demanded a stiffer government response to terrorism.[94] Several modifications would occur to satisfy this renewed concern.

First, the BKA was substantially upgraded to meet the terrorist threat. The Suppression of Terrorism department (TE) and the Special Branch (ST) were established, the first to investigate terrorism and the second to collect and analyze information and to oversee the operations of BKA computers.[95] The PIOS computer database recorded all information regarding persons, institutions, objects and addresses of known terrorists.[96] The INPOL program sought out information on suspects by monitoring travel routes, transport schedules, plane tickets, hotel and car rentals, and various other data which could be matched with other databanks to record the movements of terrorists.[97] Both systems were connected with the BfV in an effort to increase the probability of capturing terrorists and to create a stronger federal response. Increased manpower levels were required, and the government utilized BEFA, a national police surveillance system.[98] The German government was now launched on a course toward a stiffer policy for responding to terrorists.

The specialization of the police and intelligence systems were not without rewards. A number of prominent RAF prisoners were facing

criminal trials by the end of 1975, and the government had scored some major successes against the neo-Nazis. At least four extreme-Right groups had been dissolved before they had a chance to seriously challenge the German federal state, including the European Liberation Front (EBF), the National-Socialist Battle Group of Great Germany (NSKG), the Social Revolutionary National Battle Society of Germany (SNKD), and the Association of German National Socialists (BNNS).[99] At the very least, lives were saved by the activities of the police and the BfV by early intervention, but the neo-Nazis would return later. Despite the machinery created by the German government for counterterrorism, the challenge remained.

The GSG-9 was employed for two major operations in 1975. First, they were needed to protect the *Bundesrat* from terrorists, which they did for one year beginning in March. Their duties complemented the *Hausinspektion des Deutschen Bundestages* (HDB), which had been created to protect the Lower House.[100] Second, they were on duty to protect prosecutors and judges in the Stammheim RAF trials, which began in May.[101] Protective abilities aside, the softer policy which had been in place before reaped its benefits. The Germans were, of course, unable to respond to crises beyond their borders, so when the OPEC raid occurred in December, 1975, the Germans were helpless. Gabriele Kröcher-Tiedemann, who had been released as a concession in the Lorenz affair, took an active role in the assault, killing two people.[102] The incident was a reminder to the Germans that concessions resulted in further terrorist attacks. Policy would have to address that reality.

By the beginning of 1976 the Germans were sounding out their

options for a tougher stance toward terrorism. The popularity of the decision at Stockholm, coupled with the belief that such a policy could deter terrorism, made the German leadership begin to seriously consider stronger countermeasures. With changes and modifications brought about to date, the German leadership began attempts to distance the population from terrorists. At a funeral for a victim of a terrorist act, Chancellor Schmidt dismissed the popular notion of terrorists as disenchanted youths. The terrorists, Schmidt said, "are not misguided reformers -- these are criminals, before God and man".[103] Hans-Dietrich Genscher, then the Foreign Minister, said "it should be clear by now that these actors on the terrorist and anarchist scene are not misguided idealists but cold-blooded, vicious murderers".[104] The statements by these leaders set the stage for more legal reforms, with the object being to simplify the apprehension and prosecution of terrorists and their supporters.

The BKA budget had increased by some 700% since 1965 and the BfV budget had increased fourfold during the same period, yet terrorism was on the rise.[105] A simple infusion of funds had proven insufficient for counterterrorism; legal changes were required once again, and they would be much more stringent than in previous years. In January, the Anti-Constitutional Advocacy Act was adopted, which prohibited support, by word or action, of a terrorist or criminal organization.[106] In June, the Anti-Terror Law was enacted, making the formation of a terrorist group illegal, and letters between lawyers and terrorist clients in prison were subjected to surveillance.[107] Membership in a terrorist group was made illegal[108], as was the possession of deactivated military weapons in private collections.[109] Failure to warn police of an impending attack was

made illegal, and certain lawyers with sympathies for terrorists could be excluded by the courts without necessarily proving those sympathies beyond suspicion.[110] These lawyers could be excluded from terrorist proceedings permanently. Furthermore, the crime of "terrorist conspiracy" was added to the legislative approach, with classification as a major crime and pre-trial detention for up to five years.[111] While restrictions on lawyers were not necessarily popular, the justification for them came later. Siegfried Haag, an RAF defender, was arrested in November 1976 and had documents linking him with a terrorist group. He also had an RAF 'hit list' with a number of prominent leaders suggested as targets for assassination.[112] The Haag case justified the legal measures taken by Germany in its fight against the terrorists.

The single most important terrorist operation in 1976 also produced the most important antiterrorist effort to date. Two German terrorists joined forces with the PFLP and hijacked an Air France jet to Entebbe, Uganda.[113] In a daring raid, Unit 269 from the Israeli military rescued the hostages and killed the terrorists, proving to the world that such operations could, in fact, be successfully carried out. GSG-9 took note of the raid, and prepared for the expertise required. In other operations, GSG-9 provided security for the winter Olympics at Innsbruck, the Montréal Olympics, assisted with the Moluccan crisis in Holland, and were on duty at the trial for the surviving Stockholm terrorists.[114] Additionally, GSG-9 troops were tasked with security at seven major German airports, signalling a heightened degree of nervousness on the part of the authorities and an increasing belief that their special forces were better equipped to cope with terrorists, as opposed to regular police forces

and investigators.[115] Overall, Germany appeared to be hardening its stance toward terrorism.

By 1977 the BKA had grown by over 250% in manpower levels alone, and were responsible for tracking terrorists as the lead agency for counterterrorism.[116] Added to an increase of over 50% in terrorism from the Left,[117] the BKA and other related departments had to deal with a rise in violence from extremists on the Right.[118] Still, Germany was unwilling to classify the Right according to the same criteria and labels attached to the Left. For the time being the Right would not be considered a threat to the stability and security of the state.

With a number of intelligence shifts, legal alterations and the creation of specialized police units, the Germans believed they had found an answer to terrorism. Violence would be handled by the criminal law process, albeit somewhat stricter than 'regular' killers. The killings of 1977 and the spectacular nature of some of the crimes and victims would have a profound effect on Germany, both for its policy and for the process of countering terrorist activity. Germany would have to cope with the fact that legal mechanisms could not prevent terrorism, and that the criminal process was still too lenient. The terrorists who had been convicted, as Germany discovered, would not mend their ways merely because they had spent time in prison. Decisions from past crises would return to haunt the country, as would prison policies. Terrorists worked around the system.

The list of prominent victims of terrorism grew in 1977. On April 7, 1977 Siegfried Buback was assassinated by the RAF for his role as the Federal Prosecutor General; one of the killers was an escapee from the Lorenz affair.[119] On July 30 Jürgen Ponto was killed by Susanne

Albrecht, Brigitte Mohnhaupt and a third terrorist because of his alleged ties to the old Nazi regime, and because he was partially responsible for the alleged corruption and exploitation in the German economy.[120] The matter was made worse when it was discovered that Mohnhaupt had been jailed the previous year for being a member of a terrorist organization, but that she had been released early.[121] Ponto was a reminder to the Germans that light prison treatment and sentencing could do nothing to dissuade terrorists, and actually worked at cross purposes with the bureaucratic machinery and stringent laws enacted and emplaced because of the existence of the terrorists. Ponto and Buback would not be the last victims of such activities, even though their deaths may have been preventable. Germany would be shocked to a greater degree in the near future.

On September 5, 1977, Hans Martin Schleyer, the head of the West German Employers' Association, was kidnapped in Cologne as a pawn in an attempt by the RAF to obtain the freedom of jailed comrades.[122] Without delay the German government tasked GSG-9, the intelligence agencies, and the police with the most massive manhunt in German history. The police surveillance system, BEFA, or *Beobachtende Fahndung*, threw all its resources into the search. Using two techniques, *Schleppnetzfahndung* (trawl net search) and *Rasterfahndung* (scanning search), the BEFA system, the BKA, the BfV and GSG-9 were unable to locate Schleyer.[123] On September 8, Willy Brandt clearly enunciated his disgust with the supporters of the terrorists, who had made the acts possible by providing identification, safehouses, cars and other logistical support to the terrorists. He said the sympathizers were "responsible for the terrible

deeds to an incomparably higher degree than those fanatics who pull the trigger of the machine gun". Brandt blasted the supporters further, saying "They provide the nourishment, the equipment, the sanctuary, without which the terrorists could not hang on to their absurd and bloody dreams of the People's War".[124] The media, to its credit, heeded a request by the government through the Grand Crisis Committee not to publish any details of the search. Unwilling to make any concessions, the government was locked into six weeks of crisis. Correctly believing that there was a connection between the imprisoned terrorists, their attorneys and the outside cells of terrorists, the government instituted the *Kontaktsperrengesetz* (Contact Ban) on September 30, which eliminated all communication between jailed terrorists and any outside party.[125]

The pressure on the government was dramatically increased in October when a mixed group of Palestinian and German terrorists seized Lufthansa #181 and held it in Mogadishu, Somalia, reiterating the demands made by the Schleyer kidnappers. The government had no intention of caving in to the demands and immediately dispatched GSG-9, along with two SAS operatives, to storm the plane. On October 17 the crisis was brought to a satisfactory conclusion, with three of four terrorists killed and no passengers lost, although the pilot had been shot prior to the raid.[126] Although Schleyer was murdered the next day the firm position taken by Germany was a rousing success, emasculating the relevance of the RAF for the immediate future and restoring public and international confidence in the German government in the face of adversity. The Germans had capped earlier efforts at structural and legal changes with a shift in policy.[127] Overall, 1977 had been a banner year for counterterrorism, although

further action was required. The Germans were clearly encouraged by their actions, and endeavoured to solidify their position. The public was supportive, further encouraging strong action. Germany was now capable of a strong response.

Whereas Mogadishu represented the most serious and far-reaching threat to the German government in recent history, the proper and satisfactory handling of the situation served to bolster the confidence of the government in its counterterrorist role. Mogadishu marked a turning point in German counterterrorism[128], both in substance and in policy, for the efforts made previously by the government in its program of specialization had finally paid off. Terrorists could not look forward to capitulation on the part of the Germans, but rather a stronger stance, not unlike the British policy. Terrorism, while showing signs of increasing, would become more difficult.

Continuity in Counterterrorism, 1978-1985

The Schleyer case proved the catalyst for expanded government efforts to control information in order to discover the hiding places, support systems and other logistical systems working for the terrorists. After it was discovered that Schleyer's murder might have been prevented, the Germans expanded their computerization efforts to improve the efficiency of locating terrorist hideouts.[129] Furthermore, some 100,000 police and intelligence officers were tasked with finding members of terrorist groups.[130] Solitary confinement was made more accessible to prosecutors and judges, causing terrorists to be held in special conditions for up to thirty days without outside contact.[131] The public, weary of

terrorism, demanded capital punishment for terrorists, just as their counterparts in Great Britain.

The immediate results of the 1977 terrorist campaign took the form of greater attention to police, intelligence and courts. Besides the changes listed above, BKA personnel increased by over 150%[132], the BEFA system received increased funding[133], and a computer system called *Kommisar* was created to process information from that surveillance system. The *Bahnpolizei* (BP, or Railway Police) was included in the counterterrorism process, as it was thought to have the capacity to provide essential information regarding the movements of terrorists and their supporters. The *Objektschutzhundertschaft* (OSH, or Installation Protection Company) was established to patrol and prevent terrorists from attacking vital targets, such as nuclear installations, laboratories and other buildings in which critical functions were performed. Furthermore, the budgets for the BKA and the BfV were increased by DM1 billion over the next few years, signalling a realization by the Germans that their security essentially relied on good intelligence.[134] The BKA was given the power to search entire apartment complexes, as opposed to a single unit, and could do so without the permission of the courts.[135] Court proceedings for persons accused of terrorism were, at the request of the Cabinet, to be dramatically increased in speed, so as to prevent the legal system from providing a forum for the revolutionary sloganeering of defendants.[136] The courts were given greater powers to exclude certain lawyers from terrorist trials, and the German government gave serious consideration to the idea of preventive detention, much like the UK had already dismantled.[137] In short, terrorists had caused the German federal state to become far more

centralized than before, and certainly more powerful than the Basic Law had intended. Terrorism had once again caused a government to consolidate its power; this procedure would continue, as terrorists were not about to surrender.

The dramatic shift in German counterterrorist policy was evident in the aftermath of the killings of Ponto, Schleyer and Buback, not just due to the militant response now exhibited, but by a series of further reforms aimed at terrorists. The BfV had its budget increased to DM1318.9 million, an increase of 343% in just a few years. The BKA retained its lead agency role, but it appeared that the Germans were more willing than before to concentrate some of their efforts on other forms of counterterrorism, particularly within its intelligence services.[138] Terrorism was on the rise, and the RZ eclipsed the RAF as the most dangerous leftist group within German borders.[139] The IRA began attacks against British targets in Germany in 1978[140] and the German authorities discovered a link between the RZ and INLA.[141] GSG-9 was dispatched to Argentina for security duties at the World Cup that summer[142], coinciding with a meeting of 480 right-wing terrorist groups at the Black International conference in Brazil.[143]

In response to the growing threat and the embarrassment of having been somewhat stymied by such small groups of terrorists, the Germans instituted more policy and legal changes in 1978 to complement the measures already in place. First, lawyers who went beyond normal procedure to defend terrorists could be banned from the courts for five years, in addition to their previous sanctions. Second, penalties were dramatically increased for simple possession of weapons or explosives,

where such devices were intended to harm persons or property. Third, residences had to be registered with the police, including overnight lodgings, so the national computer database could track terrorists more easily and prevent them from leaving the country.[144] Of particular interest was the firearms law, which implicitly recognized the difference between 'normal' society and terrorists. Permits would be granted to the former, while the latter avoided such paperwork. A person without a permit therefore could become a terrorist suspect if caught with controlled weapons.[145] Overall, power was being transferred from the rights of the individual to the duties of citizens within the context of a more centralized and powerful German state. Terrorism was altering the face of Germany itself.

Realizing that their domestic threat was a mobile group of terrorists who easily crossed European borders, the Germans sought to expand their counterterrorism program to external sources. 'Hot lines' were set up between Germany, France, Italy, Austria and Switzerland in the hope that more information could be gleaned from those sources, and because such a system gave Germany added leverage in pressuring neighbouring states into revealing the whereabouts of wanted terrorists.[146] Intelligence was sought through the Club of Berne and the Vienna Club, and the BKA strengthened its presence in Interpol, where all its employees had officer status.[147] German links with TREVI were strengthened in the hope that better cooperation between European states could ease the threat, and Germany signed the European Convention on the Suppression of Terrorism, along with Britain.[148] Most importantly, Germany, along with its G-7 partners, ratified an agreement which called for all industrialized states to

boycott air transport to states that refused to extradite or prosecute suspected terrorists.[149] Germany was clearly willing to flex its foreign policy muscles in the battle against terrorism.

Cooperative efforts with other states, combined with domestic agencies, laws and units, was a theme for German efforts in 1978. When Yugoslavia captured four RAF terrorists and offered to exchange them for Croats in Germany, the latter refused the deal, perhaps not wanting to aggravate the Croat-Serb rivalry or to become a target of Croat revenge.[150] The incident did not underscore or indicate any wavering on the part of the Germans, as another countermeasure was instituted. Germany created the *Zielfahndung*, or Target Search teams, whose purpose was to immerse themselves in the life of a terrorist, gain information regarding the location of that terrorist, and devise means for capturing that terrorist.[151] An expression of assertive internationalism and covert action, the 'Snatch Teams' operated in foreign countries, including those in the East Bloc, with the permission of those governments. In the summer of 1978, this imaginative and futuristic technique succeeded in the capture of 15 major German terrorists in Yugoslavia, Bulgaria and Romania. The German government clearly wanted to prosecute the terrorists and was willing to become more assertive in this endeavour. The *Zielfahndung* technique proved a major success in the battle against terrorism.

By 1979 the Germans had created a vast counterterrorism network, but had not succeeded in centralizing all operations at the federal level. Each *Länder* still maintained special response units and police intelligence structures, demonstrating the problem of transferring power from below to above the state system.[152] Still, Germany was unwilling to expand the

powers and structures it had created in the past, but wished to allow the system to function as intended in the hope that terrorists would be captured, killed or persuaded to renounce their operations. In the eyes of German leaders the system needed time to work, and the vast powers of the federal state were becoming truly fearsome; to increase those powers might provide the terrorists with more propaganda. Germany chose to wait.

The number of terrorist acts grew substantially in 1979, rising from 947 to 1578 by the end of the year.[153] The BfV noted a rise in neo-Nazi activities, with an estimated 1400 violent members of extremist groups responsible for 1483 felonies, 117 of which were violent.[154] The *Hoffmann-Wehrsportgruppe*, or Hoffmann Military Sport Group, was receiving training in Lebanon courtesy of the PLO, and was emerging as a serious threat to security.[155] Attacks in Germany came from all sides, adding to the confusion.

By 1979 Germany recorded the eighth attack by terrorists on nuclear installations in a two-year period, raising fears that the terrorists were less inhibited than psychologists had predicted.[156] Alexander Haig narrowly missed being killed by the RAF in an attack on his car in June; the explosion actually lifted the rear of the car off the ground and blasted a huge hole in the road.[157] The RAF could only have known where and when to attack through a security leak within NATO, communicated either directly from within or through a foreign intelligence source. Either way, NATO security was lacking, and it nearly cost Haig his life and Germany a great source of embarrassment.

German policy remained unchanged through 1979, emphasizing a

commitment to resist terrorism. The only change in security involved a shift in the *Berufsverbot*, conceding that a government employee had to be assumed loyal unless evidence suggested otherwise.[158] Meanwhile, the BEFA system had some 800 suspected terrorists under surveillance, and a total of 6047 people were being watched at least occasionally for activities inimical to German security.[159] The BKA was targeting suspected terrorists with its new computer system, which had the capability of tapping into hundreds of databases throughout the country. Realizing that terrorists were hiding from normal societal functions, the BKA targeted people who paid utility bills in cash. Over 18,000 people were identified, but when these names were cross-checked with lists of property holdings, insurance and other databanks only two names were left. One was a wanted drug dealer and the other was a terrorist, Rolf Heissler, who was a suspect in the Schleyer affair.[160] The satisfactory conclusion to that two-year search provided the Germans with confidence in the wisdom of using computers to capture terrorists, but was still no substitute for good human intelligence, as would be discovered later. The government, realizing that there was a clear need for better prevention, took the track of increasing the strength of GSG-9 and sent the team on missions in Tehran and Beirut.[161] Hence, Germany was unwilling to impose further legal countermeasures, but instead placed reliance for security on the special forces and vast computer networks. That approach, developed incrementally, would largely remain intact.

By 1980 some 350 terrorists and their supporters had been charged with various crimes.[162] The RAF alone had lost 87 to imprisonment, and a further 25 were wanted by the authorities.[163] The 2 June Movement

was absorbed into the RAF, having been somewhat decimated by attrition.[164] The number of terrorist attacks increased from the previous year, suggesting that the government response was designed not to eliminate terrorism, but to attempt to control it.[165] The *Hoffmann-Wehrsportgruppe* was banned by the government in January, signalling an increase in official concern and a decrease in patience for neo-Nazi terrorists.[166] The Interior Ministry called the threat from the Right "far from serious" in May[167], despite a clear rise in violent activities. A gross failure in intelligence, the Bologna train station was bombed in August, killing 84 and wounding 180; five weeks later a bomb detonated prematurely at the Munich Oktoberfest, killing 17 and wounding 200.[168] The Right was more dangerous than the government was willing to admit, but no further countermeasures were deemed necessary.

The *Zielfahndung* system produced more results for the Germans in 1980, perhaps saving thousands of lives in the process. A number of terrorists were tracked to a Paris safehouse and were captured with the assistance of the French. Extradition was unnecessary in the process. In a disturbing development, however, the safehouse contained notes on chemical and biological warfare and a small quantity of botulinal toxin.[169] Using the information found and other intelligence, the German authorities searched another safehouse in Germany soon after the Paris raid and discovered "several hundred kilograms" of "organophosphorous compounds", which were to be used in a large-scale attack.[170] While the incidents were clearly alarming, they demonstrated the effectiveness of the German counterterrorism effort and supported the conclusion that harsher measures were not necessarily needed. Better surveillance was needed,

however, as the deadly tone of chemical and biological agents caused greater anxiety. Terrorism was appearing more as a war than as a designated, annoying criminal activity.

Despite the measures taken by Germany to combat terrorism, the frequency of attacks continued to rise. In 1981 there were 1856 terrorist incidents.[171] The favoured targets of significant attacks shifted from prominent individuals and installations to a campaign against NATO, defence in general, and the American presence in Germany.[172] Adding to the government concern with leftist violence, the Right began to express a strange brotherhood with the violent Left. "We are not so far apart ideologically", said Volker Heidel, the leader of the German Socialist Party, ". . .Our common goal is the destruction of society. We want to develop a basic strategy of resistance and liberation".[173] Extremists from both ends of the spectrum expressed a willingness to target the same people and institutions. On September 15, 1981, two RPG-7s were launched at a car belonging to Gen. Frederick Kroesen, Commander of US forces in Germany.[174] Terrorists were changing the focus of their targets, but the German government failed to take immediate measures to meet that threat; it would prove to be a mistake.

In 1981 the German government chose to maintain its counterterrorist posture without major changes. Section 88(a) of the Penal Code, which sanctioned inciting or threatening the Constitution, was repealed.[175] However, that Section was largely redundant and made no substantive difference to the legal tools available to the government. Other laws were reaffirmed in 1981, including such illegal activities as disruption of peace and order using threats, failure to warn authorities of an impending

terrorist attack, and instructing others to commit acts of terrorism.[176] The only major legislative change for the year was an approval to use the national census as a source of information for the intelligence agencies responsible for counterterrorism.[177] By this point terrorism constituted about one third of one percent of crime in Germany, but used up to ten percent of the police and other security agencies, excluding the BGS.[178] Terrorism was proving its ability to alter the role of the state dramatically despite relatively low levels of violence. Still, the German government appeared unwilling to expand its power, preferring instead to allow existing countermeasures to work.

To some degree the Germans proved wise in their desire to utilize existing laws and structures, thus avoiding more stringent, and perhaps unpopular, countermeasures. In 1982 there were a string of successes against terrorist groups in Germany, both from the Left and the Right. When the neo-Nazi group *Volkssozialisttische Bewegung Deutschlands Partei Der Arbeit* (VSBD/PdA) attacked a restaurant, killing one and wounding 24, the group was banned by the government, as was the youth wing *Junge Front*.[179] Three Muslim Brotherhood terrorists were expelled;[180] Rolf Clemens Wagner, an RAF member, was charged with kidnapping Schleyer in 1977;[181] ten RAF members, including two senior leaders, were captured by GSG-9 operatives; and a number of arms caches were uncovered by the security forces and the intelligence agencies, setting back terrorists on both ends of the political spectrum.[182] These successes were notably as a result of efforts by the BfV, the BKA and GSG-9, all federal structures; the latter indicated a willingness by the Germans to use special forces rather than regular police for what was essentially a police function. The

federal state was exercising power over the *Länder*.

While it seemed that the RAF had again been dealt a decisive blow, such optimistic assessments had proven incorrect in the past. Furthermore, the RZ increased its activities, setting more than 600 bombs in 1982, ten percent of which were aimed at American and military targets.[183] The Right appeared on the decline, at least temporarily, as the government had demonstrated its resolve in communicating the message to the terrorists that their activities would not be tolerated.[184] All was not well, however, as the government chose to ignore a threat of cooperation between European terrorists. An RAF communiqué said:

> Now the question is settled whether one should and will in future engage in armed struggle in the Federal Republic and in Western Europe. It is obvious. . . struggles whose common aims make them into one struggle and generate from that political and practical links, will exist in the Western European centre in many guises.[185]

The threat would be carried out in short order, but the RAF needed time to rebuild once again. Germany was heading for a larger battle, with greater cross-border ramifications, which would challenge existing countermeasures. The German government chose a path of continuity in 1983 consistent with its past efforts to allow existing laws and structures time to work. There were 2195 terrorist offences that year, an increase from 1982.[186] The BKA analyzed the RZ, concluding that there were 400 to 600 members in 70 to 120 cells operating in the country.[187] The German government discovered to its dismay that another terrorist group had formed under the umbrella of the RZ. Called *Rote Zora*, the sub-group was the women's auxiliary, concentrating its efforts against sexism, male dominance, the environment, capitalism, imperialism, squatter's rights and

a host of other issues.[188] No new moves were made against the Left.

The Action Front of National Socialists and Activists (ANS/NA), a neo-Nazi terrorist group, was banned by the Minister of the Interior, Friedrich Zimmermann, further communicating to the Right that violence would not be accepted as a form of political communication.[189] In another action, the Kexel/Hepp Group was "smashed" after they wounded two soldiers in a bomb attack and bombed a Jewish restaurant the previous year.[190] Walter Kexel committed suicide when he was sentenced to thirteen years' imprisonment, and the Group dissolved. The German government could not be accused of ignoring terrorism from the Right.

By 1983 the government had scored numerous successes against revolutionary and fascist groups. The major effort for the year involved the expansion of the criminal and intelligence computer databases by integrating information from other government departments. Up to 1500 databases from large and small bureaucracies and some 25,000 local population registries were absorbed into the BKA computers, which were linked with the BfV.[191] The intent was to create an enormous pool of information to be used in hunting terrorists without visibly disrupting German society. When the federal court ruled that individuals had "an exclusive right over the use of personal data collected by any government organization", a temporary halt was placed on the expansion of Germany's internal intelligence-gathering apparatus. Subsequent legislation, however, restored this expansion by exempting the police and the intelligence agencies from restrictions on the use of all available data.[192] The German government was on a clear and rapid course toward concentrating its counterterrorism function within the various intelligence agencies. In

this fashion the government hoped to defeat terrorism by identifying and locating known offenders. This approach would not succeed alone, as the Germans would discover. The flexibility of terrorist groups and the continual process of recruitment would counteract technology.

In 1984 there was a drop in the frequency of terrorist acts on German soil, perhaps owing to the number of captured or killed activists and suggesting that the German security machinery was having an effect.[193] In May the authorities declared that the RZ was "potentially the most dangerous terrorist organisation"[194], which merely confirmed that the number of attacks from this collection of groups was higher than any other and that the potential for mass lethality existed; this was not a new conclusion, but suggested that the German government no longer considered the RAF as a great threat. The rise in neo-Nazi activity certainly helped in creating this perception, as the BMI listed 34 violent groups from the Right in security estimates and claimed the existence of 158 others, along with 89 groups of Old Right members, who had no intention of provoking violence.[195] Intelligence agencies and the special police units created for attacking terrorists were faced with so many threats that it surely affected their performance. Other problems would surface later.

A raid on a Belgian quarry in June signalled the beginning of a new era in counterterrorism for the Germans. The Belgian *Celles Communistes Combattantes* (CCC), France's *Action Directe* (AD) and the RAF stole 800 kilograms of high explosives and demonstrated a willingness to cooperate with each other in a broader campaign of violence.[196] Six RAF members were captured in Frankfurt and Karlsruhe the following month, and a

document was seized which indicated a willingness on the part of the RAF to begin a cross-national campaign of 'Euroterrorism'.[197] On December 15, 1984 a joint communiqué declared a shift in targets to NATO installations; three days later an RAF bomb was defused at Oberammergau NATO school. The bomb materials were from the quarry raid.[198] Other actions followed and 1985 would be devastating to the counterterrorist forces. Despite having the most sophisticated technology in the world and a network of information unparalleled in modern history, the terrorists would have the advantage of surprise. The result of a stunning failure in intelligence, Euroterrorism caught the government and its agencies "completely by surprise".[199] Technology had failed to accomplish what could have been done by humans in the right places.

By 1985 the RAF consisted of 22 core members, with 200 part-time terrorists and 2000 supporters, according to government estimates.[200] They were being actively pursued by over 4000 police officers in the BKA alone.[201] The frequency of attacks more than doubled that of the previous year. Imprisoned RAF members went on a hunger strike to demand political prisoner status, and were supported by a deluge of bombings and arson attacks courtesy of their free comrades.[202] The government refused to capitulate to the hunger strike, emphasizing its policy of firmness using existing counterterrorist machinery. Chancellor Helmut Kohl and President François Mitterrand promised to improve cooperation in the face of Euroterrorism[203] after a senior figure in the German Defence Ministry, Ernst Zimmermann, was killed by terrorists. The only change in the German approach to counterterrorism for the year was the establishment of a seaborne unit within the GSG-9 at a cost of DM3

million.[204] Overall policy and the instruments needed to carry it out remained largely untouched. Existing laws and structures, however, were under tremendous strain, as the terrorist offensive continued with vigour. Germany would be forced to become tougher with the terrorists.

A Tougher Stance: 1986-1994

The German government faced a growing threat from internal as well as external terrorists in 1986, and the disturbing trend of state-sponsorship came to the fore. Foreign governments, particularly Syria, Iran and Libya, were increasingly involved in terrorism and European governments were increasingly capable and willing to discuss these issues openly in the media. Terrorists had bombed their way across Germany so many times that the government was firmly in a position of constant defence from a phenomenon which had seemed to be temporary in previous years. Horst Herold, the BKA official who had modernized the state police agency with computers, said "Terrorism has now established itself as a permanent phenomenon".[205] It was an acknowledgement of the seriousness of the problem and an indication that Germany would remain in a state of seige and would have to tighten its security once again.

The involvement of foreign governments in Germany's internal security problems came to a climax in 1986 with the bombing of the German-Arab Society by Syrian intelligence on March 29, followed by the bombing of La Belle disco on April 5 by terrorists using Libyan support.[206] Both incidents occurred with the knowledge and support of the East German MfS.[207] Germany responded to the problem not unlike the UK, which was encountering a similar problem. Although Germany did

not completely sever diplomatic ties with Syria, relations were nevertheless "sharply downgraded".[208] Diplomats, agents under diplomatic cover and students were expelled from the country, just as the British were doing at the time.[209] Arms sales were halted, security on Syrian diplomats was increased, restrictions were placed on the movements of diplomats, Syrian Air was subjected to closer scrutiny, foreign aid was suspended, and high-level visits to Syria were cancelled.[210] The affair was a major embarrassment to the Syrians and provided all European governments an opportunity to express displeasure with Syrian involvement in terrorism.

The Libyans received the same treatment, although they were also bombed by the United States. Diplomats, agents under diplomatic cover, students, and agents under student cover were expelled. The German government supported the US action against Libya and made a threat of its own. Referring to Libyan involvement in terrorism, Helmut Kohl said "Whoever continually preaches and practices violence, as Qaddafi does, must count on the victims defending themselves".[211] Great Britain, France, Germany and the US appeared united on the issue, which gave rise to the establishment of a secure fax link between European states for the purpose of improving communications on matters involving mobile terrorists.[212] European cooperation appeared to have improved, and the actions taken by Germany and her allies resulted in a drop in the frequency of terrorist attacks in Germany, particularly those directed by rogue Middle Eastern states.[213]

A number of changes in Germany's approach to terrorism were made in 1986. First, the Foreign Ministry established a working group for studying the external sources of the problem and formulating reactions to

international incidents.[214] Second, and more significantly, a series of internal reforms were begun, strengthening Germany's already strict internal laws on terrorism. Each *Länder* was required to share more information with the BKA and the BfV; jurisdictional procedures were simplified, making it easier for all terrorist attacks to be treated by the federal courts; and laws were harmonized to facilitate better coordination between levels of government.[215] It became easier for the police to set up roadblocks, and saliva samples could be taken without permission in cases where positive identity was in doubt.[216] All violent acts against targets such as the military-industrial complex, railroads, ships, aircraft, materials, public works and all infrastructure became classified as terrorist offences. Maximum sentences were doubled, and a policy of reduced sentences for terrorists who turned state's evidence was established (*Aussteiger*), except when death was involved.[217] In summary, German laws were strengthened, the authorities were granted greater powers, the state was more willing to be assertive when dealing with foreign sponsors, and the entire process of counterterrorism became more centralized than it had been previously. German policy was hardening, and the intelligence agencies were given a greater role. Terrorists had only managed to make the German security apparatus more powerful than at any other time since World War II.

Germany seemed quite content to continue with its existing laws and structures in 1987, showing a desire to reach the needed balance between restrictive laws and special units and the need to maintain the essence of democratic government. Having partially defeated the Left, the Right and foreign state sponsors, the government maintained a new continuity, fully

aware that the actual threat had not disappeared. When the IRA attacked a BAOR unit at Rheindahlen on March 27, wounding four waitresses and 27 soldiers, the Germans were justifiably embarrassed.[218] The BKA and the BfV responded by increasing the number of their agents in the field, demonstrating the German willingness to combine their massive computer apparatus with a liberal dose of HUMINT.[219] Ties with allied intelligence agencies and police forces were strengthened, and GSG-9 sought better communications with the French GIGN and the SAS.[220] A great deal of the overall German effort continued to shift toward covert action and special forces as the primary vehicles of response, thus indicating a greater resolve on the part of the government to combat terrorists with special measures not normally used in law enforcement or policy implementation.

The costs of security from terrorism escalated in 1987 to the point where Germany was spending some $2.8 billion on counterterrorism alone.[221] More was spent when the government announced that it was introducing machine-readable passports.[222] The intent of the measure was to provide four disincentives to terrorists. First, tracking was made easier, since the information could be tied into the BKA computer at Wiesbaden, and hence to the BfV. Second, the speed of detection of terrorists was dramatically increased. Third, terrorism could be prevented by stopping foreign and domestic terrorists from having large amounts of mobility. Fourth, the measure would theoretically prevent the use of false documents by terrorists, rendering foreign governmental assistance more difficult and partially eliminating the ability of terrorists to use passports as tools with which to gain access to valuable targets and escape routes.

All these measures were, it seems, aimed at deterrence.

German airport security had certainly improved over the years. On January 16, 1987, Mohammed Hamadei, one of the TWA 847 terrorists from 1985, was captured at Frankfurt airport. Ten days later, Abbas Ali Hamadei was captured as well.[223] The United States requested extradition of Mohammed, but the request was refused by the Germans on the grounds that the US had capital punishment.[224] Meanwhile, two German citizens were taken hostage in Beirut by the Hamadeis' supporters, thus placing the government in a difficult situation. When the issue was settled, the Hamadei brothers were charged and convicted in a German court, and the hostages were not released by any deal with the terrorists.[225] Further, and perhaps more important, the Germans were able to extract a wealth of information from the captured terrorists, which was turned over to French intelligence, which in turn managed to decimate the plague of AD and Arab terrorist groups on French soil.[226] The firm policy of the German government was a resounding success, both domestically and internationally.

German policy and tools remained unchanged through 1988, although Chancellor Kohl recommended the establishment of a European version of the FBI as a solution to international terrorism and the problems associated with the mobility of violent criminals.[227] The TREVI system had not succeeded in quelling terrorism, nor had Interpol, so the suggestion may have been partially pointed toward solving the problems of internationalism which had cost the Germans so dearly. Despite that failure in international cooperation, the Germans succeeded in stopping some 3000 people at its borders in 1988 alone for reasons of security, including terrorism.[228]

With border controls due to be relaxed or removed, Germany was clearly concerned about the loss of control that would mean for its counterterrorism forces, and feared the possibility of even greater levels of terrorism as an unwanted byproduct of integration. With the RAF undergoing a resurgence under the new banner of opposing a united Europe, Germany saw a clear threat of greater cooperation between terrorist groups which would underscore a gap in security planning in Europe. The proposal would eventually receive support from the French, but was not a real concern for most European leaders or bureaucrats. The issue would remain unresolved.

While terrorist activity in Germany remained at unacceptable levels, a single failure in a German court may have led directly to one of Europe's most devastating terrorist incidents. The German government in 1988 was actively involved in counterterrorism, assigning its computers, intelligence agencies and special forces in the detection and prevention of terrorism. In a brilliant operation called 'Autumn Leaves', the Germans uncovered a PFLP-GC cell and arrested 17 terrorists, complete with bomb materials and other weapons.[229] A German judge released all but one of the terrorists, and the BKA warned Britain of the group and the possibility of a terrorist attack, but the event went ahead. Pan Am 103 was destroyed in midair over Lockerbie, Scotland only weeks later, killing 270 people. The actions of a single judicial official had unravelled a brilliant counterterrorist operation and had resulted in hundreds of deaths, along with the accompanying shock of the event. The terrorists had won again.

In 1989 the German government maintained continuity in policy, structures and laws. Terrorism would be kept at a minimal level by

existing legislation and countermeasures, thereby avoiding the creation of a police state. The cost of that policy was continuity in terrorist attacks, as terrorists were not completely eliminated from circulation. Greater international cooperation was achieved, however, as the Germans, French and British displayed an increased willingness to exchange information. The result of this cooperation was the discovery and capture of some of Europe's leading terrorists from the IRA, the Basque ETA and some remaining Red Brigades members who had used Germany and France as safe havens while evading the Italian authorities.[230] Perhaps of greater concern was further evidence of transnationalism in the terrorist world, such as cooperation between the Red Brigades, the RAF and Abu Nidal, which was uncovered in Paris in early September of 1989.[231] When the Chief Executive of the Bundesbank, Alfred Herrhausen, was executed with an IRA-style remote bomb on November 30, there was a legitimate concern that the RAF and the IRA were cooperating in terrorism in Germany, a prospect sure to frighten the German government.[232] Cooperation with the British was badly needed.

The government declared that foreign groups were a greater threat to German security than domestic groups in 1989, according to a statement by the Attorney General. Domestic countermeasures were placed at the forefront of dealing with foreign squabbles and security problems. At least partially, increased security in other states tended to give terrorists a reason to use Germany as a base of operations, and the practise of engaging in battles on German soil was continuing, much to the frustration of the government. One successful counterterrorist operation indicated a willingness by the government to stop these battles using the intelligence

services. In Darmstadt in June, 1989, a Lebanese Shi'ite terrorist cell was uncovered and dismantled. Documents in their possession indicated a desire to attack seven Israeli targets and at least twenty bars frequented by US servicemen.[233] Overall, the Germans displayed a policy based on firmness, with pre-emption and internationalism as desired goals. The policy trend was maintained to the best of the government's ability using existing countermeasures.

By 1990 the RAF began to have serious difficulties just staying intact; ten members were arrested in the last two weeks of June alone.[234] "You can't say this is the end of the RAF", said Kurt Rebmann, a former Attorney General, ". . . The commandos of the third generation are as dangerous as they were before and they still threaten the internal security of the Federal Republic".[235] After an attempt on the life of Interior Minister Hans Neusel, the RAF indicated its fear of the GSG-9, calling them a "killer unit".[236] Neusel warned that the RAF intended to create a larger, coordinated Western European terrorist movement by immersing their struggle within that of other violent movements.[237] The enemy, the RAF warned, was now "Fascist beast West Europe".[238]

Hans-Ludwig Zachert, the president of the BKA, publicly supported the prospect of a Europe without borders, but cautioned "it means that we will all have to accept a loss of security".[239] The prospect of greater mobility for people also meant greater mobility for terrorists, both domestic and foreign, and Europe as a whole would be only as secure as the weakest link in the security net at the external borders.[240] The idea of Arab terrorists entering Greece in order to bomb Germany became a greater concern, as the authorities had enough trouble containing violence

from internal terrorists. Islamic fundamentalists, radical leftists and neo-Nazis all presented problems for the jurisdiction of German counterterrorist units and laws. In the mad dash for integration, it seemed that the European bureaucrats had completely forgotten about security from terrorism. This problem was brought into clearer focus when German authorities discovered an IRA cell and an SAS shadow unit penetrating the German border from the Netherlands; both teams had entered illegally, and the threat to sovereignty was clear.[241] Further discussions were needed to deal with the problem.

A rise in neo-Nazi violence prompted the government to ban the Republican party from parliamentary elections. Neo-Nazis had penetrated the party to such a degree that the government believed it faced a threat to security through subversion.[242] Further laws were deemed unnecessary for domestic terrorism, but the problem of physical movements needed action. In response, the Germans and French agreed to allow a zone of 'hot pursuit' encompassing ten kilometres on either side of the existing borders.[243] Article 41 of the Schengen Accord allowed antiterrorist units:

> . . . to continue pursuit in the territory of another Contracting Party without prior authorization where given the particular urgency of the situation it was not possible to notify the competent authorities of the other Contracting Party. . ."[244]

This unprecedented waiver of sovereignty was largely symbolic, given that the territory could be traversed in a few short minutes. Nevertheless, the agreement was a crucial first step in the process of European integration and cooperation in counterterrorism, and sent a message to terrorists that their days of mobility and sanctuary were numbered.

In Lebanon in 1991, the Islamic Jihad threatened to attack German targets if the government refused to release Mohammed and Abbas Hamadei from prison. German officials said they "would not be pressured to release convicted terrorists"[245], thus solidifying the German policy of 'no concessions'. Meanwhile, a greater problem was brewing within Germany. Neo-Nazis were increasing the frequency of their attacks on foreigners, prompting a high degree of media attention and embarrassment for the government. In response, the government raided 114 homes of suspected violent neo-Nazis, and a police official said ". . . we will not tolerate their criminal acts".[246] Membership in the extreme Right grew into the thousands, yet the government did not categorize the Right as a collection of terrorist groups; they were disaffected youths committing wholly criminal acts, and would be treated as such. Meanwhile, the RAF complained about the resurgence of fascism as they continued their bombing campaign. Germany began to feel the strain of internal disorder emanating from both ends of the political spectrum.

In 1992 the government noted the establishment of the fourth generation of the RAF, but that group was overshadowed by a dramatic increase in violence from the Right.[247] The number of violent acts perpetrated by the Right grew into the thousands, with the most frequent targets being refugees. The BfV did consider these extremists to be a threat to security,[248] but were hesitant to confirm that as policy; they were tasked to infiltrate the groups. The Republican Party, no longer banned from participating in elections, posted electoral gains in a number of regions. By the fall of 1992, over 1800 acts of violence had been committed by the radical Right.

The German government began a series of reforms and countermeasures in an attempt to quell the violence. The SPD cooperated with the ruling party to recommend tightening Germany's liberal asylum laws, with the intention of removing a justification for violence as well as to prevent a massive influx of refugees and the inevitable tensions that could produce.[249] Interior Minister Rudolf Seiters proposed the expansion of police powers to include a period of preventive detention for rioters who tended to travel from one protest to the next, and serious consideration was given to banning certain groups, just as the government had done with the Left.[250] In fact, preventive detention had been used earlier in the year at the July G-7 meeting in Munich. Anyone who was considered a "potential disrupter" was detained without charge for up to two weeks.[251] Attacks on foreigners were called "a horrible experience and a disgrace" by Chancellor Helmut Kohl.[252] The National Front was banned in November, federal prosecutors assumed control over criminal charges, and GSG-9 troops were used to raid the offices of extremist groups.[253]

The continuation of extremist violence clearly affected government perceptions of the degree of the problem. Chancellor Kohl made the government's position perfectly clear in a speech to the *Bundestag*. "The state's monopoly on the use of force to fight violence may not be infringed upon", Kohl said, "and whoever tries to do so will face the full force of the law".[254] The Interior Ministry proposed a countermeasure which had been partially used to control the extreme Left in the past. Extremist leaders would be subject to losing their rights including freedom of speech, assembly, membership in political organizations, and the right to

run for political office.[255] German Alternative, an extremist group, was banned in an attempt by the government to communicate its intolerance for violence to foreign and domestic observers. Klaus Kinkel, the Foreign Minister, wrote to the world in a newspaper article, expressing the position of the German government:

> The reputation of being a liberal democracy committed to the defence of human rights which Germany has built up over decades must not be exposed to serious damage from extremist nationalistic slogans and violence from right-wing factions. The spectre of a past we have long since overcome must not be allowed to reappear.[256]

Unrestricted asylum ended in Germany. The government wished to avoid further violence and an intolerable strain on the welfare state by a change in the Constitution. It was a partial victory for the extremists, although the government was generally committed to combating violence without appeasement. Germany faced a greater threat at this point to its internal stability than at any other time in its modern history.

By 1993 the German government, with the support of the vast majority of the public, seemed to be gaining control over violence from the Right, but decided to ban the Kurdish Workers' Party (PKK) because of violence against Turks in Germany.[257] Later, however, the sheer scale of neo-Nazi thuggery had almost completely eclipsed the threat from the RAF and the RZ, so in 1994 the *Bundestag* approved legal changes such as making Holocaust denials illegal, improving powers for the police and intelligence agencies, and increasing prison terms for assault.[258] However, the *Bundesrat* rejected most of these changes on the grounds that the powers to be granted to the BfV were too great, although further anti-Nazi legislation is expected.[259] Most notably, the BfV became the

most cited authority on violence, suggesting that the government was placing a somewhat greater amount of authority for counterterrorism in the hands of its domestic intelligence agency.[260] The use of intelligence was becoming more important in controlling violence, just as the British had come to realize. The legal and structural arrangements made to combat leftist violence were deemed sufficient to accomplish the same goal against the Right, although further modifications to German security will be interesting to note.

Summary

German policy toward counterterrorism began at zero, or benign neglect, not unlike the British approach. Political radicalism and violence appeared to take the Germans by surprise, suggesting a lack of good intelligence regarding the evolving terrorist threat. The police proved reasonably competent in the first few years of the modern age of terrorism, but this was at least partially due to the inexperience of the young terrorists. A short period of time in PLO training camps in the Middle East changed the efficiency of the terrorists. Not realizing that their success hinged to some degree on the amateurism of the terrorists, the German police and their political masters saw no reason to prepare for a stronger attack.

That attitude led directly to the appalling failure of the Bavarian police at the Munich Olympics. From that point, Germany began to regard terrorism as a serious threat. Over the course of the 1970s, Germany cautiously and steadily centralized its counterterrorism structure, created new units strictly for counterterrorism, expanded others, changed or

strengthened laws and court procedures, and spent enormous sums of money in an attempt to capture terrorists. Policy evolved during this period of time, to the point where the Germans accepted the fact that they gained nothing by making concessions to terrorists' demands. By the 1980s it was apparent that Germany wished to maintain a policy of no concessions.

In the 1980s the German government refined its policy and made efforts to cure some of the problems it had encountered in previous battles. One of the most significant problems involved the transfer of information to centralized sources such as the BKA and the BfV. In a further complication, the rise of the Right and an increase in Middle Eastern terrorism placed strains on the security apparatus in Germany. By this time, however, sufficient changes in security powers, court procedures, other legal measures, special forces and intelligence gathering had already occurred. Aside from minor adjustments, Germany was prepared to deal with most terrorist threats without considering capitulation. More recently, the German government placed the BfV into the position of lead agency, effectively acknowledging the importance of good intelligence in the battle against terrorism. This structural arrangement is likely to continue indefinitely, just as in the UK, and presents an entirely new chapter in German counterterrorism which will be fascinating to observe.

Notes to Chapter Three

1. In this chapter, 'German' or 'Germany' will refer to the Federal Republic of Germany, West Germany or the FRG. References to the East will be duly noted.

2. Stefan Aust, The Baader-Meinhof Group, London: The Bodley Head, 1987, p.16 (tr. Anthea Bell)

3. *Ibid.*, p.34

4. *Ibid.*

5. *Ibid.*, p.41

6. *Ibid.*, p.44

7. Konrad Kellen, in Walter Reich, ed., Origins of Terrorism: Psychologies, Ideologies, Theologies, States of Mind, Cambridge: Cambridge University Press, 1990, p.53. The LfV passes all information to the BfV, or *Bundesamt für Verfassungsschutz.*

8. Aust, The Baader-Meinhof Group, p.46-7. Aust's account of the early years of German terrorists is the best source written to date, and subsequent chapters in this account are highly detailed regarding the dynamics and personalities of the Left throughout most of the history of the RAF. Additionally, information emerges which demonstrates the early beginnings of the neo-Nazi movements and their training, alongside the Left, in PLO camps throughout the Middle East. This work is indispensable for an understanding of Germany's terrorist problem and should be required reading for all students of European terrorist history.

The penetration story was incorrectly credited to the BfV in the book; in truth, the LfV and LKA had responsibility at the time and the federal agencies were responsible for external threats or threats with a primarily external dimension. See Peter J. Katzenstein, West Germany's Internal Security Policy: State and Violence in the 1970s and 1980s, Ithaca: Cornell University Occasional Paper #28, Center for International Studies, 1990, p.16

9. John E. Finn, Constitutions in Crisis: Political Violence and the Rule of Law, New York: Oxford University Press, 1991, p.197

10. *Ibid.* See also Detlef Krauss, "The Reform of Criminal Procedure Law in the Federal Republic of Germany", The Juridical Review, (December 1979), p.206

11. Aust, The Baader-Meinhof Group, p.138. All BKA officers also have Interpol status.

12. Peter J. Katzenstein, West Germany's Internal Security Policy: State and Violence in the 1970s and 1980s, Ithaca: Cornell University Occasional Paper #28, Center for International Studies, 1990, p.14. This is a very detailed and comprehensive examination of German internal security, and should be regarded as a primary source for students of German security issues.

13. United States Government, Report on Domestic and International Terrorism, Washington: Subcommittee on Civil and Constitutional Rights of the Committee of the Judiciary, 97th Congress, 1st Session, (April 1981), p.7. See also Defense Intelligence Agency, Terrorist Group Profiles, USGPO, 1988, p.61

14. Katzenstein, West Germany's Internal Security Policy, p.35

15. Finn, Constitutions in Crisis, p.201

16. Eva Kolinsky, "Terrorism in West Germany", in Juliet Lodge, ed., The Threat of Terrorism, London: Wheatsheaf Books, 1988, p.61. Most of these involved bombings or incendiary attacks. The figures are from the *Bundesministerium Des Innern*, or BMI (Interior Ministry).

17. Hans Joseph Horchem, "The Decline of the Red Army Faction", Terrorism and Political Violence, 3:2 (Summer 1991) p.61*ff*

18. Stephen Segaller, Invisible Armies: Terrorism Into the 1990s, London: Michael Joseph, 1986, p.29

19. Christopher Dobson, Ronald Payne, Counterattack: The West's Battle Against the Terrorists, New York: Facts on File, 1982, p.103

20. Patrick Brogan, The Fighting Never Stopped, New York: Vintage Books, 1990, p.502

21. Hans Josef Horchem, "Terrorism in West Germany", Conflict Studies #186, London: ISC (May 1986), p.10. The RAF fought for the BSO in Jordan; also present were twelve members of the neo-Nazi group *Freikorps Adolph Hitler*.

22. Aust, The Baader-Meinhof Group, p.95-96

23. Juliet Lodge, ed., The Threat of Terrorism, London: Wheatsheaf Books, 1988, p.69

24. Eva Kolinsky, "Terrorism in West Germany", in Lodge, ed., The Threat of Terrorism, p.61. These figures exclude assault, malicious damage, extortion, and threats.

25. David Th. Schiller, "West Germany Coping with Terrorism: The Evolution of a Police Organization", TVI Report, 6:2 (Fall 1985), p.28

26. Peter J. Katzenstein, West Germany's Internal Security Policy, p.3

27. Aust, The Baader-Meinhof Group, p.137

28. Katzenstein, West Germany's Internal Security Policy, p.32

29. H.H. Tucker, ed., Combating the Terrorists: Democratic Responses to Political Violence, New York: Facts on File, 1988, p.187

30. *Ibid.*

31. Hans-Joseph Horchem, "The Terrorist Lobby in West Germany: Campaigns and Propaganda in Support of Terrorism", in Naomi Gal-Or, ed., Tolerating Terrorism in the West: An International Survey, London: Routledge, 1991, p.34, 36

32. Aust, The Baader-Meinhof Group, p.179

33. *Ibid.*, p.152

34. *Ibid.*, p.152

35. *Ibid.*, p.163

36. Steven M. Berry, "Combatting Terrorism: The Legislative Approach", TVI Report, 9:3 (1990) p.19

37. Hans Josef Horchem, "Terrorism in West Germany", Conflict Studies #186, London: ISC (May 1986), p.16

38. United States Government, West Germany's Political Response to Terrorism, Hearing Before the Subcommittee on Criminal Laws & Procedures of the Committee on the Judiciary, United States Senate, 95th Congress, 2nd Session, April 26, 1978, p.4. The BfV is similar in structure and role to Britain's BSS, according to Tom Polgar, "The Intelligence Services of West Germany", International Journal of Intelligence and Counterintelligence, 1:4 (1987) p.91

39. Aust, The Baader-Meinhof Group, p.137

40. *Ibid.*, p.192. This is also known as the Radicals Decree, or *Radikalenerlass*; see Juliet Lodge, David Freestone, "The European Community and Terrorism: Political and Legal Aspects", in Yonah Alexander and Kenneth A. Meyers, eds., Terrorism in Europe, New York: St. Martin's Press, 1982, p.85

41. Aust, The Baader-Meinhof Group, p.207. The loyalty clause existed since 1950, but had been intended for communists and fascists, not for terrorists.

42. Claire Sterling, The Terror Network, New York: Berkley Books, 1982, p.135

43. O.P. St. John, Air Piracy, Airport Security, & International Terrorism: Winning the War Against Hijackers, New York: Quorum Books, 1991, p.145. See also, Claude Bergeron, "Unlawful Interference with Civil Aviation, 1968-1988", in David Charters, ed., Democratic Responses to International Terrorism, Ardsley-on-Hudson, NY: Transnational Publishers, 1991, p.46. According to Fenton Bresler, Genscher ordered the creation of a hostage-rescue unit, the GSG-9, on February 26. All other accounts of German counterterrorism history suggest this did not happen until the Fall of 1972. See Fenton Bresler, Interpol, London: Penguin Books, 1992, p.151

44. David Th. Schiller, "Current Terrorist Activities in Germany", TVI Journal, vol. 14 (Winter 1985) p.16

45. Hans Joseph Horchem, "Terrorism in West Germany", Conflict Studies #186, London: ISC (May 1986) p.15; and Abraham H. Miller, "The Evolution of Terrorism", Conflict Quarterly, vol. 5 (Fall 1985) p.6

46. Hans Joseph Horchem, "Terrorism in West Germany", Conflict Studies #186, p.2; see also Melvin J. Lasky, "Ulrike Meinhof and the Baader-Meinhof Gang", Encounter, XLIV:6 (June 1975) p.20

47. Hans Joseph Horchem, "West Germany's Red Army Anarchists", Conflict Studies #46, London: ISC (1974) p.11

48. Konrad Kellen, "The RAF in West Germany: Stronger Than Ever?", TVI Report, 7:2 (1987?) p.24

49. Peter J. Katzenstein, West Germany's Internal Security Policy, p.12

50. *Ibid.*, p.13

51. Grant Wardlaw, Political Terrorism: Theory, Tactics, and Counter-Measures, Cambridge: Cambridge University Press, 1989, p.97; and Peter J. Katzenstein, West Germany's Internal Security Policy, p.10. The police reinforcement companies were also called *Einsatzhundertschaft.*

52. Anthony Kellett, Contemporary International Terrorism and its Impact on Canada, Ottawa: Department of National Defence, ORAE Report #R100 (February 1988), p.38

53. Rolf Tophoven, GSG 9: German Response to Terrorism, Koblenz: Bernard & Graefe Verlag, 1985, p.91

54. Tophoven, GSG 9: German Response to Terrorism, p.11

55. *Ibid.*, p.11-13

56. *Ibid.*, p.13

57. The existence of these structures did not receive academic discussion until 1975. Vague references, however, were made in 1972 to the chain of command above GSG-9 which had to include a political body. For the

purposes of this paper, the establishment of these committees will be fixed at late in 1972 or early in 1973.

58. Richard Clutterbuck, Terrorism, Drugs and Crime in Europe After 1992, London: Routledge, 1990, p.54-55

59. Leonard B. Weinberg, Paul B. Davis, Introduction to Political Terrorism, New York: McGraw-Hill, 1989, p.159. Passage from J. Bowyer Bell, A Time of Terror, p.86

60. Geoffrey Pridham, "Terrorism and the State in West Germany During the 1970s: A Threat to Stability or a Case of Political Over-reaction"?, in Juliet Lodge, ed., Terrorism: A Challenge to the State, Oxford: Martin Robertson, 1981, p.28; Hans Joseph Horchem, "Terrorism and Government Response: The German Experience", Jerusalem Journal of International Relations, 4:3 (1980), p.46; and Ariel Merari, ed., On Terrorism and Combating Terrorism, Frederick, Maryland: University Publications of America, 1985 (JCSS Seminar, 1979) p.65

61. Eva Kolinsky, "Terrorism in West Germany", in Juliet Lodge, ed., The Threat of Terrorism, London: Wheatsheaf Books, 1988, p.61

62. Paul Wilkinson, Terrorism and the Liberal State, London: Macmillan, 1986, p.85

63. Peter J. Katzenstein, West Germany's Internal Security Policy, p.12. See also David Th. Schiller, "West Germany Coping with Terrorism: The Evolution of a Police Organization", TVI Report, 6:2 (Fall 1985) p.29

64. *Ibid.*, p.16

65. Tom Polgar, "The Intelligence Services of West Germany", International Journal of Intelligence and Counterintelligence, 1:4 (1987) p.80

66. Peter J. Katzenstein, West Germany's Internal Security Policy, p.12

67. *Ibid.*, p.13

68. *Ibid.*, p.14

69. *Ibid.*, p.14

70. Aust, The Baader-Meinhof Group, p.255

71. n.a., "Criminal Law Reform: Bonn Hits at Urban Terrorists", German International, vol. 19 (January 1975) p.16

72. Detlef Krauss, "The Reform of Criminal Procedure Law in the Federal Republic of Germany", The Juridical Review, (December 1979), p.207

73. *Ibid.*, p.210

74. For other information regarding these legal changes, see Aust, The Baader-Meinhof Group, pp. 282-283; Hans Joseph Horchem, "Terrorism in West Germany", Conflict Studies #186, London: ISC (May 1986), pp. 16-17; Hans Joseph Horchem, "Terrorism and Government Response: The German Experience", Jerusalem Journal of International Relations, 4:3 (1980) p.53; John E. Finn, Constitutions in Crisis: Political Violence and the Rule of Law, New York: Oxford University Press, 1991, pp. 213-214; and Peter J. Katzenstein, West Germany's Internal Security Policy: State and Violence in the 1970s and 1980s, *op. cit.*, p.32

75. Eva Kolinsky, "Terrorism in West Germany", in Lodge, ed., The Threat of Terrorism, p.61. The figures here are from the BMI.

76. Richard Clutterbuck, Terrorism, Drugs and Crime in Europe After 1992, London: Routledge, 1990, p.53

77. Hans Joseph Horchem, "Terrorism in West Germany", Conflict Studies #186, p.2

78. Melvin J. Lasky, "Ulrike Meinhof and the Baader-Meinhof Gang", Encounter, XLIV:6 (June 1975), p.12

79. Richard Clutterbuck, Terrorism, Drugs and Crime in Europe After 1992, p.47

80. Aust, The Baader-Meinhof Group, p.273

81. The United States estimated RZ strength at about 100, but others suggested 300 as a more realistic figure. While the figure remains debatable, particularly when counting active supporters, it is almost certainly higher. For some figures, see Defense Intelligence Agency, Terrorist Group Profiles, (1988), p.66; and Richard Clutterbuck, Terrorism and Guerrilla Warfare, London: Routledge, 1990, p.164

82. The agreements were actually made on February 15, 1974, but some adjustments were required for the size of the unit, its sub-departments, and training for seaborne operations. Good sources for this information include Rolf Tophoven, GSG 9: German Response to Terrorism, Koblenz: Bernard & Graefe Verlag, 1985, p.18*ff*; and J. Blum, "The Protection of Persons and Installations at Risk: The German Way", Police Studies, 1:4 (December 1978). The following information is primarily from these two sources.

83. Paul Wilkinson, Terrorism and the Liberal State, p.85. Other figures indicate the number at 46 for the year. See Eva Kolinsky, "Terrorism in West Germany", in Juliet Lodge, ed., The Threat of Terrorism, p.61, table 3.1. The constant differences in figures are directly attributable to definitional problems and the resulting inductive difficulties, whereby some offences are excluded from some lists. Wilkinson's figures include "other acts of violence", which is the largest category, yet these "other" acts are not broken down. It is assumed that the figures include any act or threat which can be attributed to a political movement.

84. This was admitted by the Germans in 1977. See Anthony Kellett, Contemporary International Terrorism and its Impact on Canada, DND, ORAE Report R100, (February 1988) p.54

85. Lawrence Zelic Freedman, Yonah Alexander, eds., Perspectives on Terrorism, Wilmington, Del.: Scholarly Resources, 1983, p.229; Yonah Alexander, "Will Terrorists Use Chemical Weapons?", JINSA Security Affairs, (June/July 1990) p.10, cf. Bernard Schechterman, Martin Slann, eds., Violence and Terrorism, 91/92, Guilford, CT: The Dushkin Publishing Group, 1991, p.157; and Kellett, ORAE Report R100, p.55

86. *Ibid.*

87. Patrick Brogan, The Fighting Never Stopped, p.504. Numerous other accounts exist, such as Richard Clutterbuck, Terrorism, Drugs and Crime in Europe After 1992,, p.47; Melvin J. Lasky, "Ulrike Meinhof and the Baader-Meinhof Gang", Encounter, XLIV:6 (June 1975) p.15; and Stefan Aust, The Baader-Meinhof Group, p.286, among others.

88. Brogan, The Fighting Never Stopped, p.504, is a good account of the incident.

89. Aust, The Baader-Meinhof Group, p.287

90. Richard Clutterbuck, Terrorism, Drugs and Crime in Europe After 1992, p.47

91. Geoffrey Pridham, "Terrorism and the State in West Germany During the 1970s: A Threat to Stability or a case of Political Over-reaction?", in Juliet Lodge, ed., Terrorism: A Challenge to the State, Oxford: Martin Robertson, 1981, p.34

92. Aust, The Baader-Meinhof Group, p.290

93. Hans Joseph Horchem, "Terrorism and Government Response: The German Experience", Jerusalem Journal of International Relations, 4:3 (1980) p.54; Hans Joseph Horchem, "Terrorism in West Germany", Conflict Studies #186, London: ISC (May 1986) p.19; Hans Joseph Horchem, "Political Terrorism -- The German Perspective", in Ariel Merari, ed., On Terrorism and Combating Terrorism, Frederick, MD: University Publications of America, 1985, p.67 (from JCSS seminar, Tel Aviv, 1979).

94. Geoffrey Pridham, "Terrorism and the State in West Germany During the 1970s", in Lodge, ed., Terrorism: A Challenge to the State, p.39

95. John E. Finn, Constitutions in Crisis: Political Violence and the Rule of Law, New York: Oxford University Press, 1991, p.206; United States Government, West Germany's Political Response to Terrorism, Hearing before the Subcommittee on Criminal Laws and Procedures of the Committee of the Judiciary; United States Senate, 95th Congress, 2nd Session (April 26, 1978) p.10

96. Stephen Segaller, Invisible Armies: Terrorism into the 1990s, London: Michael Joseph, 1986, p.158

97. David Th. Schiller, "West Germany Coping with Terrorism: The Evolution of a Police Organization", TVI Report, 6:2 (Fall 1985) p.29

98. *Ibid.*, p.29

99. Hans Joseph Horchem, "Right-wing Extremism in Western Germany", Conflict Studies #65, London: ISC (1975) p.10

100. J. Blum, "The Protection of Persons and Installations at Risk: The German Way", Police Studies, 1:4 (December 1978) p.55, 58

101. Rolf Tophoven, GSG 9: German Response to Terrorism, p.93

102. Hans Joseph Horchem, "Terrorism in West Germany", Conflict Studies #186, London: ISC (May 1986) p.11

103. J. Bowyer Bell, A Time of Terror: How Democratic Societies Respond to Revolutionary Violence, New York: Basic Books, 1978, p.181

104. *Ibid.*

105. Geoffrey Pridham, "Terrorism and the State in West Germany During the 1970s: A Threat to Stability or a Case of Political Over-reaction?", in J. Lodge, ed., Terrorism: A Challenge to the State, p.48

106. *Ibid.*, p.47

107. *Ibid.*

108. Hans Josef Horchem, "Terrorism in West Germany", Conflict Studies #186, London: ISC, (May 1986), p.17

109. Steven M. Berry, "Combatting Terrorism: The Legislative Approach", TVI Report, 9:3 (1990), p.20

110. Detlef Krauss, "The Reform of Criminal Procedure Law in the Federal Republic of Germany", The Juridical Review, (December 1979), p.214

111. J. Bowyer Bell, A Time of Terror, p.181

112. Richard Clutterbuck, Terrorism, Drugs and Crime in Europe After 1992, p.48

113. One of the Germans, Wilfried Böse, had been captured by the French earlier that year. Rather than send him to Germany, he was inexplicably released. See Brian Hayes, "The Effect of Terrorism in Society: An Analysis, With Particular Reference to the United Kingdom and the European Economic Community", Police Studies, vol.2 (Fall 1979), p.7; see also, O.P. St. John, Air Piracy, Airport Security & International Terrorism:

Winning the War Against Hijackers, New York: Quorum Books, 1991, p.160

114. Rolf Tophoven, GSG 9: German Response to Terrorism, p.93

115. J. Blum, "The Protection of Persons and Installations at Risk: The German Way", Police Studies, 1:4 (December 1978) p.58

116. Hans Josef Horchem, "Terrorism and Government Response: The German Experience", Jerusalem Journal of International Relations, 4:3 (1980), p.52

117. Eva Kolinsky, "Terrorism in West Germany", in Lodge, ed., The Threat of Terrorism, p.61

118. Bruce Hoffman, "Right-Wing Terrorism in Europe", Orbis, 28:1 (Spring 1984), p.17. Hoffman lists 616 acts of violence, including vandalism.

119. Aust, The Baader-Meinhof Group, p.400. See also, United States Government, Report on Domestic and International Terrorism, *op. cit.*, p.9

120. *Ibid.*, p.407

121. *Ibid.*, p.406

122. Richard Clutterbuck, Terrorism, Drugs and Crime in Europe After 1992, p.48

123. *Ibid.*, p.58

124. Hans Joseph Horchem, "The Terrorist Lobby in West Germany: Campaigns and Propaganda in Support of Terrorism", in Naomi Gal-Or, ed., Tolerating Terrorism in the West: An International Survey, London: Routledge, 1991, p.46

125. Grant Wardlaw, Political Terrorism: Theory, Tactics, and Counter-Measures, Cambridge: Cambridge University Press, 1989, p.125; United States Government, West Germany's Political Response to Terrorism, p.5 (incorrectly states Sept. 20 as the date); Hans Joseph Horchem, "Terrorism in West Germany", Conflict Studies #186, London: ISC (May 1986), p.17; Aust, The Baader-Meinhof Group, p.479; Detlev Krauss, "The Reform of Criminal Procedure Law in the Federal Republic of West Germany", The Juridical Review, (December 1979), p.217

126. Jennifer Shaw, ed., Ten Years of Terrorism, p.182; Neil C. Livingstone, "States in Opposition: The War Against Terrorism", Conflict, 3:2,3 (1981), p.114; Neil C. Livingstone, The War Against Terrorism, Lexington: D.C. Heath & Co., 1982, p.180; Rolf Tophoven, GSG 9: German Response to Terrorism, p.95

127. O.P. St. John, Air Piracy, Airport Security & International Terrorism: Winning the War Against Hijackers, p.147; Peter J. Katzenstein, West Germany's Internal Security Policy, p.31

128. O.P. St. John, Air Piracy, Airport Security and International Terrorism, p.147

129. Some 30,000 bits of information went through the BKA at the time of the crisis; the one describing Schleyer's whereabouts was lost.

130. Peter J. Katzenstein, West Germany's Internal Security Policy, p.48

131. *Ibid.*, p.32

132. Richard Clutterbuck, Terrorism, Drugs and Crime in Europe After 1992, p.55

133. *Ibid.*, p.56

134. Geoffrey Pridham, "Terrorism and the State in West Germany During the 1970s: A Threat to Stability or a Case of Political Over-Reaction?", in Lodge, ed., Terrorism: A Challenge to the State, p.48

135. Steven M. Berry, "Combatting Terrorism: The Legislative Approach", TVI Report, 9:3 (1990), p.20

136. Detlev Krauss, "The Reform of Criminal Procedure Law in the Federal Republic of Germany", The Juridical Review, (December 1979) p.217

137. *Ibid.*, p.218

138. Geoffrey Pridham, in Lodge, ed., Terrorism: A Challenge to the State, p.48. The BKA, however, had grown by a factor of ten during this period in manpower alone. See David Th. Schiller, "West Germany Coping with Terrorism: The Evolution of a Police Organization", TVI Report, 6:2 (Fall 1985) p.30

139. Eva Kolinsky, "Terrorism in West Germany", in Lodge, ed., The Threat of Terrorism, p.61 (figures); and David Schiller, "Germany's Other Terrorists", Terrorism: An International Journal, 9:1 (1987), p.88 (RZ threat according to the BKA)

140. Steven Emerson, Brian Duffy, The Fall of Pan Am 103, London: Futura Publications, 1990, p.252

141. Schiller, "Germany's Other Terrorists", p.93. The contact's name was Rudolph Raabe.

142. Rolf Tophoven, GSG 9: German Response to Terrorism, p.95

143. Bruce Hoffman, "Right-Wing Terrorism in Europe", Conflict, 5:3 (1984), p.202. The timing gave a good excuse for GSG-9 operatives and intelligence officials to monitor the meeting, although it is not clear whether or not this occurred.

144. See Steven M. Berry, "Combatting Terrorism: The Legislative Approach", TVI Report, 9:3 (1990), p.20

145. Lodge, ed., The Threat of Terrorism, p.56

146. Peter J. Katzenstein, West Germany's Internal Security Policy, p.21

147. *Ibid.*

148. TREVI stands for Terrorism, Radicalism, Extremism and Violence International. It is primarily designed as a forum for the exchange of information. The ECST has been ineffective because it is non-binding; there is a clause in the agreement which exempts extradition of terrorists on political grounds.

149. Richard Clutterbuck, Terrorism, Drugs and Crime in Europe After 1992, p.124

150. David Schiller, "From a National to an International Response", in H.H. Tucker, ed., Combating the Terrorists: Democratic Responses to Political Violence, New York: Facts on File, 1988, p.188

151. For information about the 'Snatch Teams', see the following: Christopher Dobson, Ronald Payne, Counterattack: The West's Battle Against the Terrorists, New York: Facts on File, 1982, p.100; David Th. Schiller, "West Germany Coping with Terrorism: The Evolution of a Police Organization", TVI Report, 6:2 (Fall 1985), p.30; Bruce George, MP, Rapporteur, Working Group on Terrorism: Final Report, Belgium: North Atlantic Assembly (February 1987), p.37; W. Michael Reisman, James E. Baker, Regulating Covert Action, New Haven: York University Press, 1992, p.36-7; Gayle Rivers, The War Against the Terrorists: How to Win It, New York: Stein & Day, 1986, p.214; Christopher Dobson, Ronald Payne, The Terrorists, p.158; Anthony Kellett, Contemporary International Terrorism and its Impact on Canada, Ottawa: DND (February 1988), ORAE Report #R100, p.144; Hans Joseph Horchem, "Terrorism and Government Response: The German Experience", Jerusalem Journal of International Relations, 4:3 (1980), p.46; Neil C. Livingstone, The War Against Terrorism, Lexington: D.C. Heath & Co., 1987, p.252.

152. Geoffrey Pridham, "Terrorism and the State in West Germany", in Lodge, ed., Terrorism: A Challenge to the State, p.50

153. Eva Kolinsky, "Terrorism in West Germany", in Lodge, ed., The Threat of Terrorism, p.73. Table 3.1 on page 61 lists 41 attacks by the Left in 1979, yet Table 3.3 on page 73 cites the greater figures. The reason for the confusion lies in the inductive approach to statistical evidence; the greater number includes threats, arson, robbery, assault and other offences where they have a political motive. The lesser figures are less clear, citing what is excluded but not what is included. Curiously enough, all figures are from the Interior Ministry (BMI). Such confusion does little to increase the understanding of the threat in any accurate terms; suffice to say for the present purposes that the threat was substantial at the

time.

154. Bruce Hoffman, "Right-Wing Terrorism in Europe", Conflict, 5:3 (1984), p.193

155. *Ibid.*, p.204. See also, Hans Joseph Horchem, "Terrorism in West Germany", Conflict Studies #186, London: ISC (May 1986) p.14

156. Christopher Dobson, Ronald Payne, Counterattack: The West's Battle Against the Terrorists, New York: Facts on File, 1982, p.182

157. Richard Clutterbuck, Terrorism, Drugs and Crime in Europe After 1992, p.50

158. John E. Finn, Constitutions in Crisis: Political Violence and the Rule of Law, New York: Oxford University Press, 1991, p.209

159. Stefan Aust, The Baader-Meinhof Group, p.182

160. Richard Clutterbuck, Terrorism and Guerrilla Warfare, London: Routledge, 1990, p.62; Clutterbuck, Terrorism, Drugs and Crime in Europe After 1992, p.59

161. Rolf Tophoven, GSG 9: German Response to Terrorism, p.95

162. David Th. Schiller, "West Germany Coping with Terrorism: The Evolution of a Police Organization", TVI Report, 6:2 (Fall 1985), p.30

163. Hans Joseph Horchem, "Terrorism and Government Response: The German Experience", Jerusalem Journal of International Relations, 4:3 (1980), p.46

164. David Th. Schiller, "Germany's Other Terrorists", Terrorism: An International Journal, 9:1 (1987), p.88; Hans Joseph Horchem, "The Terrorist Lobby in West Germany: Campaigns and Propaganda in Support of Terrorism", in Naomi Gal-Or, ed., Tolerating Terrorism in the West: An International Survey, London: Routledge, 1991, p.33; Hans Joseph Horchem, "Terrorism in West Germany", Conflict Studies #186, London: ISC (May 1986), p.1; John E. Finn, Constitutions in Crisis, p.204

165. The number of incidents has been recorded as 77 or 1766, depending on the crimes listed. See above; Eva Kolinsky, "Terrorism in West Germany", in Lodge, ed., The Threat of Terrorism, pages 61 and 73 respectively.

166. Bruce Hoffman, "Right-Wing Terrorism in Europe", Conflict, 5:3 (1984), p.193

167. Bruce Hoffman, "Right-Wing Terrorism in Europe", Orbis, 28:1 (Spring 1984), p.16

168. *Ibid.*, p.16; Richard Clutterbuck, Terrorism, Drugs and Crime in Europe After 1992, p.53

169. Christopher Dobson, Ronald Payne, Counterattack, p.109; Jeffrey Ian Ross, "The Nature of Contemporary International Terrorism", in David Charters, ed., Democratic Responses to International Terrorism, Ardsley-On-Hudson, NY: Transnational Publishers, p.35

170. Neil C. Livingstone, Terrell E. Arnold, eds., Fighting Back: Winning the War Against Terrorism, Lexington: D.C. Heath & Co., 1986, p.4

171. Eva Kolinsky, "Terrorism in West Germany", in Juliet Lodge, ed., The Threat of Terrorism, p.73

172. David Th. Schiller, "Current Terrorist Activities in Germany", TVI Journal, vol. 14 (Winter 1985), p.16

173. Bruce Hoffman, "Right-Wing Terrorism in Europe", Orbis, 28:1 (Spring 1984), p.23

174. Hans Joseph Horchem, "The Terrorist Lobby in West Germany: Campaigns and Propaganda in Support of Terrorism", in Naomi Gal-Or, ed., Tolerating Terrorism in the West: An International Survey, p.47; Richard Clutterbuck, Terrorism, Drugs and Crime in Europe After 1992, p.50

175. John E. Finn, Constitutions in Crisis, p.211

176. Peter J. Katzenstein, West Germany's Internal Security Policy, p.32

177. Eva Kolinsky, "Terrorism in West Germany", in Lodge, ed., The Threat of Terrorism, p.83

178. Peter J. Katzenstein, West Germany's Internal Security Policy, p.3

179. n.a., "Political Violence and Civil Disobedience in Western Europe 1982", Conflict Studies #145, London: ISC, 1983, p.8; Bruce Hoffman, "Right-Wing Terrorism in Europe", Orbis, 28:1 (Spring 1984), p.23; Hans Joseph Horchem, "The Terrorist Lobby in West Germany: Campaigns and Propaganda in Support of Terrorism", in Naomi Gal-Or, ed., Tolerating Terrorism in the West: An International Survey, London: Routledge, 1991, p.54

180. "Political Violence and Civil Disobedience in Western Europe 1982", Conflict Studies #145, London: ISC, 1983, p.9

181. *Ibid.*

182. "Political Violence and Civil Disobedience in Western Europe 1982", Conflict Studies #145, London: ISC, 1983, p. 9-10; Rolf Tophoven, GSG 9: German Response to Terrorism, p.7

183. "Political Violence and Civil Disobedience 1982", p.8; and Patrick Brogan, The Fighting Never Stopped, p.506

184. Richard Clutterbuck, Terrorism, Drugs and Crime in Europe After 1992, p.53

185. Eva Kolinsky, "Terrorism in West Germany", in Lodge, ed., The Threat of Terrorism, p.70

186. *Ibid.*, p.73

187. David Th. Schiller, "Current Terrorist Activities in Germany", TVI Journal, vol. 14 (Winter 1985), p.16-17

188. David Th. Schiller, "Germany's Other Terrorists", Terrorism: An International Journal, 9:1 (1987) p.96

189. Hans Josef Horchem, "Terrorism in West Germany", Conflict Studies #186, London: ISC (May 1986), p.9; Hans Josef Horchem, "The Terrorist Lobby in West Germany: Campaigns and Propaganda in Support of Terrorism", in Naomi Gal-Or, ed., Tolerating Terrorism in the West: An International Survey, p.55. The leader of the group is Michael Kühnen.

190. Hans Josef Horchem, "The Terrorist Lobby in West Germany", in Gal-Or, ed., Tolerating Terrorism in the West, p.55

191. Peter J. Katzenstein, West Germany's Internal Security Policy, p.18-19

192. *Ibid.*, p.47

193. Eva Kolinsky, "Terrorism in West Germany", in Lodge, ed., The Threat of Terrorism, p.61, 73

194. Hans Josef Horchem, "Terrorism in West Germany", Conflict Studies #186, London: ISC (May 1986) p.7

195. Eva Kolinsky, "Terrorism in West Germany", in Lodge, ed., The Threat of Terrorism, p.72; cited from "Verharmlosung des Rechtsextremismus Zurückgewiesen", Innere Sicherheit, 2 (1985).

196. Stephen Segaller, Invisible Armies: Terrorism Into the 1990s, p.273

197. Hans Joseph Horchem, "The Terrorist Lobby in West Germany", in Gal-Or, ed., Tolerating Terrorism in the West, p.49

198. *Ibid.*

199. James Adams, "The Financing of Terror", TVI Report, 7:3 (1987), p.35

200. Patrick Brogan, The Fighting Never Stopped, p.506

201. Eva Kolinsky, "Terrorism in West Germany", in Lodge, ed., The Threat of Terrorism, p.83

202. David Th. Schiller, "Germany's Other Terrorists", Terrorism: An International Journal, 9:1 (1987), p.88

203. Stephen Segaller, Invisible Armies, p.151

204. David Schiller, "From a National to an International Response", in H.H. Tucker, ed., Combating the Terrorists: Democratic Responses to Political Violence, New York: Facts on File, 1988, p.198. This came as a response to the *Achille Lauro* affair.

205. Konrad Kellen, "The RAF in West Germany: Stronger Than Ever?", TVI Report, 7:2 (1987), p.24; cited from *Der Spiegel*, October 21, 1986.

206. Hans Josef Horchem, "The Decline of the Red Army Faction", Terrorism and Political Violence, 3:2 (Summer 1991), p.64; Defense Intelligence Agency, Terrorist Group Profiles, p.3

207. *Ibid.*

208. Robert Oakley, "International Terrorism", Foreign Affairs, 65:3 (1987), p.621. This was in concert with the Hindawi-Murphy affair in London as well.

209. *Ibid.*, p.620

210. Bruce George, MP, Rapporteur, Working Group on Terrorism: Final Report, Brussels: North Atlantic Assembly (February 1987), p.29

211. W. Michael Reisman, James E. Baker, Regulating Covert Action, New Haven: Yale University Press, 1992, p.109

212. Juliet Lodge, "The European Community and Terrorism: From Principles to Concerted Action", in Lodge, ed., The Threat of Terrorism, p.252

213. Robert Oakley, "International Terrorism", Foreign Affairs, 65:3 (1987), p.620

214. Peter J. Katzenstein, West Germany's Internal Security Policy, p.61. This came a decade after the Interior Ministry established its own working group.

215. *Ibid.*, p.48

216. Richard Clutterbuck, Terrorism, Drugs and Crime in Europe After 1992, p.59

217. *Ibid.*, p.60. The British equivalent was the 'Supergrass' system; for Italy it is called *pentiti*.

218. David Schiller, "From a National to an International Response", in H.H. Tucker, ed., Combating the Terrorists: Democratic Responses to Political Violence, p.185

219. This applied to drug trafficking as well as terrorists. See Peter J. Katzenstein, West Germany's Internal Security Policy, p.68

220. *Ibid.*, p.69

221. Christopher Hewitt, "The Costs of Terrorism: A Cross-National Study of Six Countries", Terrorism: An International Journal, 11:3 (1988), p.176. The figure is almost certainly a great deal higher; it would be impossible to calculate the amount of resources used by the various police forces in counterterrorism, for instance, and the figure given is not broken down to reveal each unit and its infrastructure costs. The figure is valuable in that it provides a reference point from which to extrapolate total costs, and to indicate that the problem certainly pulls a substantial amount of valuable resources away from other needed government services.

222. Richard Clutterbuck, Terrorism and Guerrilla Warfare, London: Routledge, 1990, p.76

223. L. Paul Bremer III, "Counterterrorism Strategies and Programs", Terrorism, 10:4 (1987), p.341; Alfred P. Rubin, " Current Legal Approaches to International Terrorism", Terrorism: An International Journal, 13:4,5 (July-October 1990), p.289; Richard Clutterbuck, Terrorism, Drugs and Crime in Europe After 1992, p.66

224. Donna Schlagheck, James L. Walker, "Democratizing Nations and Terrorism: The Effect of Political Violence on Civil Liberties", Current World Leaders, 35:2 (April 1992), p.295

225. One theory alleges that the German government made a deal with the terrorists. The two German hostages would be released if the Germans did not allow extradition to the US. Since hostages are generally used to gain the release of captured terrorists, such a deal seems highly unlikely; also, Mohammed Hamadei was sentenced to life in a German prison, which is hardly a concession to a terrorist group. See Alfred P. Rubin, "Current Legal Approaches to International Terrorism", Terrorism: An International Journal, 13:4,5 (July-October 1990), p.296 fn. 31. Abbas was sentenced to 13 years' imprisonment and was released in the summer of 1993, returning to a Hezbollah camp in Beirut.

226. Richard Clutterbuck, Terrorism, Drugs and Crime in Europe After 1992, p.66-7. Many CSPPA members were captured, along with Nathalie Menignon and Phillipe Rouillon, the two principal leaders of AD.

227. Richard Clutterbuck, Alison Jamieson, Juliet Lodge, "Counter-Terrorism in Europe: Implications of 1992", Conflict Studies #238, London: RISCT (February 1991), p.30

228. Peter J. Katzenstein, West Germany's Internal Security Policy, p.4

229. See Paul Wilkinson, "The Lessons of Lockerbie", Conflict Studies #226, London: RISCT (December 1989), p.4; and Yonah Alexander, "Will Terrorists Use Chemical Weapons?", in JINSA Security Affairs, June/July 1990, p.10,

reprinted in Bernard Schechterman, Martin Slann, eds., Violence and Terrorism, 91/92, Guilford, CT: The Dushkin Publishing Group, 1991

230. Paul Wilkinson, "Terrorist Targets and Tactics: New Risks to World Order", Conflict Studies #236, London: RISCT (December 1990), p.9

231. Richard Clutterbuck, Terrorism, Drugs and Crime in Europe After 1992, p.22

232. *Ibid.*, p.51

233. *Ibid.*, p.54

234. Karen Breslau, Charles Lane, "Bad Time for Terrorists", Newsweek, July 2, 1990, p.31

235. *Ibid.*

236. Dennis Pluchinsky, ed., "Terrorist Documentation", Terrorism: An International Journal, 14:3 (July-September 1991), p.196. Fear of special forces is a positive development in the German battle against the RAF, since it may serve as a deterrent.

237. Howard R. Simpson, "European Terrorism", TVI Report, 10:1 (1991), p.11

238. Hans Josef Horchem, "The Decline of the Red Army Faction", Terrorism and Political Violence, 3:2 (Summer 1991), p.71. (tr. A.M. Stewart)

239. Paul Wilkinson, "Can the European Community Develop a Concerted Policy on Terrorism?", in Lawrence Howard, ed., Terrorism: Roots, Impact, Responses, New York: Praeger Publishers, 1992, p.169

240. Remarks made by Dr. Robert de Graaf of the Dutch BVD, Canadian Association for Security and Intelligence Studies (CASIS), Annual Meeting; Learned Societies Conference, Kingston, Ont., June 2, 1991.

241. Confidential interview.

242. Christian Science Monitor, March 26, 1990, p.6; reprinted in Bernard Schechterman, Martin Slann, eds., Violence and Terrorism, 91/92, p.55

243. Alison Jamieson, "Drug Trafficking After 1992: A Special Report", Conflict Studies, London: RISCT (April 1992), p.11. The Schengen Supplementary Agreement was signed by 8 European states in 1990.

244. F.E.C. Gregory, "Police Cooperation and Integration in the European Community: Proposals, Problems, and Prospects", Terrorism: An International Journal, 14:3 (July/September 1991), p.150

245. "Kidnappers warn Germany", Winnipeg Free Press, July 19, 1991, p.19 (AP). Abbas was released in August 1993 after serving half his sentence; the government refused to release Mohammed.

246. "Raids on neo-Nazis yield massive cache of arms, propaganda", Winnipeg Free Press, December 4, 1991, p.A18 (Reuters). Many such large-scale raids have occurred, with the object being to dissuade neo-Nazi terrorists from creating the feared instability of the Weimar era.

247. Bruce Hoffman, "Low Intensity Conflict: Terrorism and Guerrilla Warfare in the Coming Decades", in Lawrence Howard, ed., Terrorism: Roots, Impact, Responses, p.143

248. Ray Moseley, "Skinheads, neo-Nazis no political threat, German monitor says", Winnipeg Free Press, Feb. 22, 1992, p.A8

249. "Tighter asylum law proposed", Winnipeg Free Press, Nov. 17, 1992, p.C12. The law was changed July 1, 1993, and further tightened in the summer of 1994. France and the UK followed suit.

250. "Germany to tackle neo-Nazi problem", Winnipeg Sun, Oct. 5, 1992, p.10

251. "Summit an international test for Munich", Winnipeg Free Press, July 6, 1992, p.A4

252. "Neo-Nazi violence escalates", Winnipeg Free Press, Nov. 24, 1992, p.D7

253. Marc Fisher, "Germany attacks neo-Nazi violence", Winnipeg Free Press, Nov. 28, 1992, p.B22

254. "Ethnic hatred worries Kohl", Winnipeg Free Press, Nov. 26, 1992, p.D12

255. Marc Fisher, "Extremist leaders face loss of rights", Winnipeg Free Press, Nov. 29, 1992, p.A4

256. Klaus Kinkel, "What Germany must do", Winnipeg Free Press, Dec. 3, 1992, p.A7

257. "Germany bans separatist Kurdish Party", Winnipeg Free Press, November 27, 1993, p.D22. France followed suit shortly after.

258. "Nazi gestures, slogans illegal", Winnipeg Free Press, May 21, 1994, p.D21

259. "Angry Turks set German police car ablaze", Calgary Herald, June 11, 1994, p.B13. Security will likely become a top issue in the next elections.

260. A large sample of newspaper clippings for 1992 and 1993 cited the BfV in comments and statistics regarding terrorism and disorder. Although the BKA has retained a strong role in criminal investigations, its focus has shifted somewhat because of a massive increase in narcotics offences. This may signal a shift toward the BfV as the lead agency for counterterrorism, coincidentally just after the British made the same change. Further, the role of GSG-9 seems to be expanding, although that position is still unclear. Both agencies seem to be in a mode of transition.

Abbreviations: Germany

KPB	Lesser Crisis Committee
GPB	Grand Crisis Committee
GBB	Department of Justice
BfV	Federal Office for the Protection of the Constitution
BMI	Interior Ministry
BKA	Federal Criminal Office
TE	Suppression of Terrorism Department
SG/ST	Security Group/Special Branch
BGS	Federal Border Guards
GSG-9	Special Forces
OSH	Installation Protection Company
EHS/BSP	Police Reinforcement Company
SET	Technical Support Company
MEK	Mobile Intervention Company
SEK	Specialist Intervention Company
PSK	Marksmen Intervention Company
BEFA	Federal Surveillance System
HDB	Parliamentary Custodians
BP	Railway Police
LKA	Criminal Office - State Level
LfV	Office for the Protection of the Constitution - State Level
ASBW	Office for the Security of the German Military Establishment
MAD	Military Counterintelligence
BND	Federal Intelligence Service (foreign)
J-2	Military Intelligence

Figure 2.1: Counterterrorism in Germany, 1994

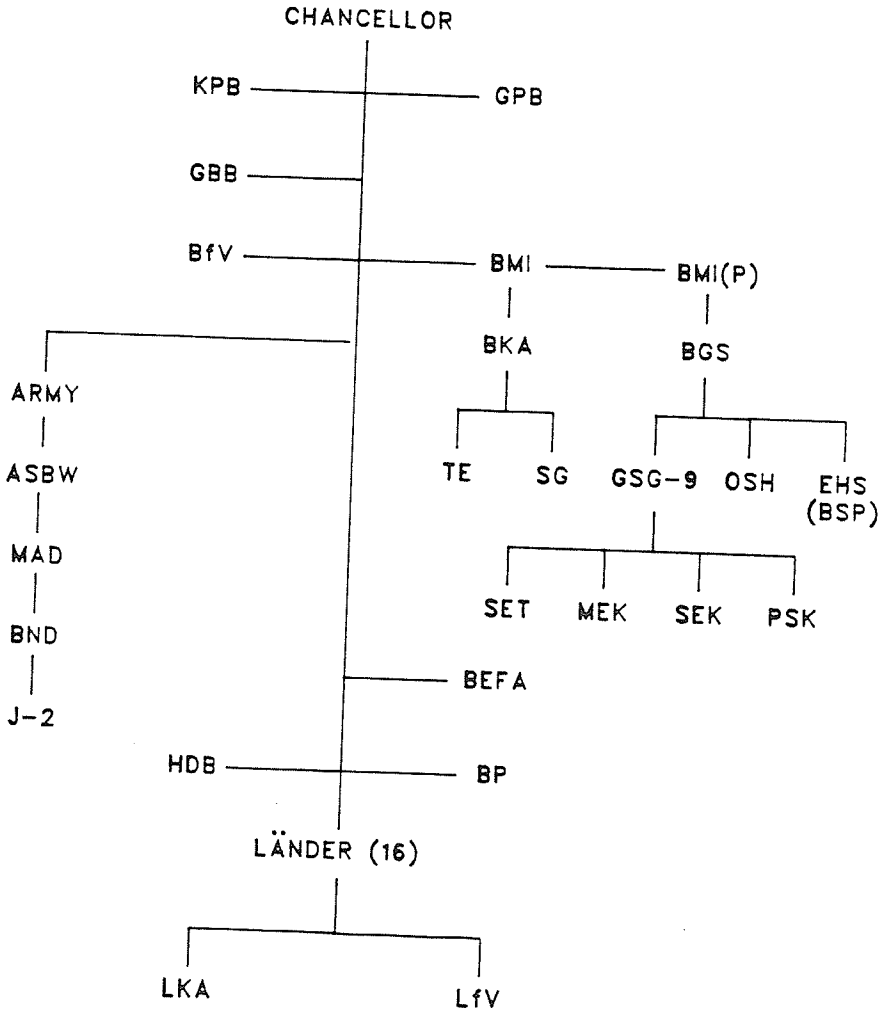

Chapter IV: Counterterrorism in France

Background

France has experienced a number of waves of terrorism over the years, beginning in its early history and continuing into the present century. After the Second World War, France was subjected to even more sources and forms of political violence, particularly as its colonies struggled for independence from the empire, and in similar circumstances as the British. Nevertheless, France was less willing to accept its fate as a declining power, choosing instead to fight various insurgent movements in an effort to retain its prestige, power and influence. After the completion of colonial withdrawal France had to cope with the modern age of terrorism, which evolved in the late-1960s as a threat to order. Legal changes, structural modifications, specialized antiterrorist units and the use of its intelligence services would all be required for the new, subterranean battle. France would resist dealing with the problem for a number of years, but would eventually be forced to emulate the responses of neighbouring states.

The French experience with alternative forms of conflict resulted in humiliating defeat, particularly in two instances. At Dien Bien Phu in 1954 the French were decimated by a theoretically inferior guerrilla force, which had less sophisticated weaponry and little experience in the European model of modern warfare. The defeat stunned France, and military withdrawal was the only option. The second major event was the Algerian conflict, which was most notable because terror was fought with terror and the conflict spread to France itself.[1] The Algerian FLN spread their political warfare to French soil, and when de Gaulle granted independence

to Algeria a group of disaffected army officers formed the Secret Army Organization, or OAS, to fight both the Algerians and the French government. From 1956 to 1962 the government was forced to wage a campaign of counterterrorism, providing the authorities with some degree of expertise in alternative conflict situations. Those lessons were apparently forgotten by 1968, when France and the rest of Europe came under attack once again. A schizophrenic political culture would define France's response to the modern wave of terrorism, drifting between solid countermeasures and outright appeasement. Eventually, however, France would be forced by terrorists to abandon its posture of avoidance and face the problem, much like its European neighbours.

The Threat Develops, 1966-1972

Terrorist groups and tactics were not new for the French, as they had dealt with the Algerian conflict using special courts, laws, and unconventional tactics. The State Security Court was established in 1963 as a response to OAS violence, and was notable for the absence of juries or other procedural niceties available in civilian courts.[2] A provision was made at the time for detention, allowing a judge to hold a suspect in custody for any amount of time between 48 hours and six days, and no limits were placed on sentences.[3] Detention could be extended to twelve days "in cases of urgency".[4] Additionally, the Ordinance of November 2, 1945 gave the government the power to perform summary expulsions of individuals who presented a menace to "public order or public credit".[5] The concept of *flagrant délit*, or 'caught in the act', allowed police to utilize powers which would normally be illegal in any other criminal

investigations.[6] These measures, when combined with greater executive powers according to the rules of the Fifth Republic, gave France the capability to combat terrorism effectively, quite unlike other European states. Whether those powers would be utilized was another matter.

In 1966 two terrorist groups emerged within France, the first as a nationalist/separatist force and the second designated as a neo-Nazi group. The *Front du libération de la Bretagne*, or FLB, along with the *Armée pour la Révolution de la Bretagne*, or ARB, emerged on the political scene to oppose perceived French imperialism in language and culture in the Brittany region.[7] These two groups combined forces, but were ignored for a decade because their targeting purposefully avoided casualties. The *Fédération d'Action Nationale Européen*, or FANE, began limited operations against Jewish targets and performed some activities associated with Holocaust denial.[8] The potential for terrorism and the actual use of limited amounts of illegal activities was largely ignored by the French government for a number of years, possibly because no great loss of life occurred. The FLB-ARB seemed satisfied with bombing symbolic, inanimate objects such as television towers, while FANE appeared as little more than Nazi sympathizers. Terrorism was something that might occur in other countries, but the French were comfortable in their belief that they were safe.

By 1968 a host of issues began to dominate the French political scene. Vietnam, the Six Day War, difficulties in the Third World and intellectual influence espousing the evils of the capitalist system pervaded the political psyche of France and a host of other countries. Farmers rioted in the streets along with radical students, but the students lost a

powerful ally when the farm lobby was appeased, thereby undercutting the strength of support for change. Nevertheless, the street violence was sufficiently intense to allow the government to call in the *Compagnies Républicaines de Sécurité* (CRS), a riot squad answerable to the National Police.[9] The CRS used batons, rifle butts and tear gas to control the violence, while the protestors used stones, sticks, steel bars and Molotov cocktails for their weapons.[10] The CRS was not the only special unit to respond to the threat of violence. France's 95 police forces were augmented by units of *Garde Mobile*, part of the *Gendarmerie Nationale*, and were tasked with rapid response in small, violent incidents.[11] Perhaps more importantly, the Interior Ministry under the leadership of Raymond Marcellin decided to engage the *Direction Renseignments Généraux*, or DRG, in the battle against terrorism.[12] Similar in form and function to the FBI and the Special Branch, the DRG was tasked with gathering intelligence on potential and real threats to France's internal security. The Japanese Red Army (JRA), Carlos, various Palestinian groups, and the German RAF were taking refuge in France, frequently under the cover of students at a number of campuses.[13] By the end of 1968, the intelligence services had learned of the existence of 44 terrorist groups around the world, and that 20 of them were either operating in or were somehow otherwise connected with France.[14] The French tradition of *terre d'asile* had allowed foreign terrorism to take hold, and the intelligence agencies had warned the government. Nothing was done; France preferred to avoid the problem, hoping that the terrorists would at least refrain from attacking French citizens. Over the next few years the French government would quietly display its own disbelief in that doctrine.

While terrorism affected France in the latter part of the 1960s it was not considered a great threat to national security, unlike in Germany and the UK. Terrorist activities were sporadic and were usually confined to foreign groups; France's official position was one of avoidance. Terrorists would not be targeted by the police or the courts if their activities did not harm French interests. Despite that policy, the French government showed clear signs of nervousness, particularly in light of terrorist activities involving close neighbours and the strong possibility of high-profile incidents involving aircraft and diplomatic targets. By 1970 the government displayed enough nervousness regarding its policy toward terrorism that it enacted the *loi anticasseurs*, which effectively acknowledged terrorism as a criminal activity of special significance. This law gave the government additional powers to take action against instigators, propagandists and supporters of violence in circumstances of "a concerted action by a group using direct force".[15] Despite an official desire to remain neutral in international terrorism, France effectively acknowledged the phenomenon as distinct, requiring some degree of consideration of countermeasures. In 1971 that law was supplemented in a bid by the French to discourage acts of hostage-taking. Designed specifically to discourage a common terrorist act, prison sentences were publicly announced as a deterrent. If a hostage were held for more than a month, the sentence would be life in prison; if held for less than a month the sentence would be between 10 and 20 years; if the victim were released in less than five days the sentence would be two to five years.[16] The death penalty could still be applied in extreme circumstances.

The Foreign Ministry retained most of the decision-making power in

terrorist incidents at the end of 1971, reflecting the French belief that terrorism was largely a foreign problem, and their decisions had a good deal to do with *raison d'état* and little to do with law and order, much less international cooperation. On December 19, 1971, Frazeh Khaelfa escaped from British custody after attempting to kill the Jordanian ambassador to London. French police arrested the terrorist in Lyons and Britain requested extradition. A French court ruled in favour of the extradition despite France's asylum tradition, but the Foreign Ministry overruled the decision of the court and released Khaelfa.[17] Demonstrating the sharp differences in style between branches of government and bureaucracies, the incident underscored what would become a pattern in French counterterrorism: the police, the intelligence services, the courts, and the Interior Ministry would frequently clash with the Foreign Ministry in the decision-making process, thus rendering French policy confusing, vacillating and uncertain. No clear message was sent to the terrorists in these circumstances.

Although the French government downplayed or ignored terrorist activities, in 1972 the Chief Commissioner of Police, Robert Broussard, was given the authority to establish a series of specialized antiterrorist units throughout the country.[18] Dozens of these *Brigades Anti-Commando* were formed from the ranks of existing police forces and were given additional training in barricade resolution, special weapons and tactics. The BAC units were certainly insufficient for extensive and sophisticated antiterrorist operations, but their existence was probably not necessarily for that purpose. By allowing the establishment of specialized units the French government hoped to address the concerns of the French police,

send a message to potential terrorists that France was not unprepared, and allay the fears of those in France who were more committed to a policy of law and order than avoidance and appeasement. The measure also displayed the possibility that the French government may have been somewhat nervous regarding its perceived immunity from terrorism. Symbolic as opposed to substantive, the French government would eventually be required to strengthen its response.

France Starts to Respond

By 1973 the French government began to reap the rewards of its policy in the form of increased terrorist activities within France, combined with antiterrorist activities perpetrated by foreign governments. Ignoring the problem had failed miserably for France, although the original intent of policy had been to avoid entanglements in what were perceived to be foreign problems. German terrorists enjoyed vacations in the south of France, much to the consternation of the German authorities.[19] Various Palestinian terrorist groups began to establish their presence in France, secure in the knowledge that the authorities would not harass them if they avoided French targets. The PFLP, certainly one of the deadliest of the groups, set up office in Paris in 1973, sparking a greater incidence of Israeli-Palestinian covert warfare.[20] Rather than responding to these developments, the French chose to stay out of the battle; the Israelis killed Mahmoud Hamshari in Paris in 1973 for his role as a planner for the Munich Massacre the previous year by wiring a bomb to his telephone[21], and killed Mohammed Boudia with a car bomb in an incident which would become known as the "Boudia barbeque"[22]. France was not just a place

where terrorists could thrive, but became a substitute battlefield in a global conflict involving the security forces of a number of states and a plethora of substate groups.

A number of terrorist groups solidified their political aspirations by 1973, particularly those within France and its territories, which in turn demonstrated to the government that terrorism could no longer be seen entirely as a foreign phenomenon. While Spain fought the Basque ETA, a violent support movement developed in southern France called *Iparraterrak* (IK), or Those of the North, whose members espoused violence as a means to establish a purely Basque homeland.[23] Violent separatist movements were established in Corsica, Brittany, Alsace, Flanders, French Catelonia and Occitania.[24] Also, leftist groups began to operate from French bases, including the Armed Nuclei for Proletarian Autonomy (NAPAP) and the International Revolutionary Action Group (GARI). The latter group gained a recruit in Jean-Marc Rouillan, who would later gain greater infamy in the French terrorist scene.[25] Clearly, the French government was facing a rising tide of extremism within its own borders to coincide with greater activities from various Middle Eastern groups, yet the government was somewhat hesitant to concede that the political system was incapable of absorbing these groups into the mainstream of political discourse. A greater sense of threat and embarrassment would be necessary to entice change in the official reaction to political violence.

One incident in 1973 served to convince the French government that some changes were needed without delay. Five Palestinian terrorists stormed the Saudi embassy in Paris, demanding the release of Abu Daoud, then under sentence of death in Jordan. Without much delay the

government capitulated and allowed the terrorists to leave from Bourget airport with their hostages in tow.[26] The incident was a considerable embarrassment to the French government, as the capitulation contradicted the trend of neighbouring states away from such attitudes and served to demonstrate that the French were both unprepared for such incidents and unwilling to defend their national interests. The Saudis were certainly unimpressed with the French security effort, yet the incident did little to spark a debate in France regarding security measures. That situation would start to change in short order.

While the official French reaction to terrorism was to deny the existence of a real threat to national security and the official policy was avoidance, French leaders were showing signs that they no longer had confidence in isolationism as a means of defence against terrorism. The combination of the Munich massacre the previous year, the Saudi embassy affair, and the development of a large number of terrorist groups with interests within France or operating from that sanctuary all demanded a stronger reaction than had previously been allowed. Additionally, some 18-20 serious hostage-takings related to terrorism occurred on an annual basis, but the BAC units were insufficient for that sort of conflict resolution.[27] In response, the French government created its first specialized antiterrorist unit, the *Groupement d'Intervention de la Gendarmerie Nationale* (GIGN), which was initially composed of 54 men and was constructed and trained along lines similar to the British SAS and the German GSG-9.[28] Answerable to the Ministry of Defence, GIGN retained its powers of arrest so it could be deployed against drug dealers and other violent criminals along with terrorists, and every member was trained

in "mountaineering, scuba diving, hand-to-hand combat, aggressive/evasive driving, marksmanship, and parachuting".[29] Each member was cross-trained in special weaponry, direct building assaults, instinctive shooting and a host of other unorthodox procedures compatible with specialized units from other countries. The French appeared better prepared for terrorism than had previously been the case, although further measures were required to round out the reaction to political violence.

In addition to the creation of GIGN as a new unit, a parachute regiment was set aside for antiterrorist duties, and the Foreign Legion was tasked with maintaining the capability of responding to terrorist actions overseas.[30] This modification essentially meant that there were four distinct methods of antiterrorist assault, utilizing either the BAC, GIGN, the Parachute Regiment, or the Foreign Legion. France certainly appeared prepared for any significant contingency, although most units had a foreign designation as opposed to a major domestic role. Additionally, the process of information was made more efficient, with a liaison office created to oversee the transfer of intelligence between all police forces.[31] The DRG retained its role in counterterrorism intelligence, but it was supplemented by the *Direction de Surveillance de la Territoire* (DST), which is the intelligence agency charged with preventing subversion from foreign sources.[32] A close relationship was encouraged between the DST and the Criminal Investigations Department of the Paris police to facilitate the transfer of timely and relevant intelligence regarding imminent threats to public security. In summary, the combination of intelligence services, police, and direct assault forces gave the impression that the French government was on a clear path toward a hard-line policy. However,

political will was lacking in this area, and the French people would pay a high price for this attitude.

In 1974 the French government chose to send two distinct messages to terrorists and the general public that terrorism would be fought rather than tolerated, representing the first concrete instances of a possible shift in policy. First, Jean-Marc Rouillan, a leading figure in GARI, was arrested and jailed for his attacks against Spanish targets in France.[33] Second, the FLB-ARB was declared an outlaw organization, effectively meaning that any association or participation with that group could be considered criminal.[34] In the first instance, Rouillan's arrest was not followed by any wholesale arrests of other members of GARI, suggesting that the government meant to send a message to the terrorists that they had erred only by attacking a target within France. In the second instance, the government wanted to send a clear message to the people of France that the FLB-ARB would not be tolerated, even though their activities were on a very low level, had not caused any deaths and had only destroyed symbolic targets such as French television towers and other threats to Breton culture. Overall, the official government reaction had yet to show any teeth.

The French government was forced to deal with two related terrorist incidents in 1974, both of which demonstrated that the government was still unwilling to fight terrorism and that the policy of the government was capitulationist in nature. In the first instance, a Japanese Red Army (JRA) terrorist, Yutuka Furuya, was arrested at Orly airport on July 26, 1974 while in the possession of forged passports.[35] Paris police followed up their investigation by arresting a cell of eight JRA terrorists in Paris, all

of whom were released and deported to the Netherlands with the exception of Furuya. The second incident occurred just six weeks later, on September 13, when three JRA terrorists and a Paris-based PFLP cell seized the French embassy in the Hague, demanding the release of Furuya.[36] Although the Dutch government was willing to storm the embassy and was certainly prepared for the task, the French government conceded to the demands of the terrorists on September 17, allowing the Hague group to escape to Syria, followed by the release of Furuya.[37] In addition to those public embarrassments, the former head of French intelligence, Pierre Marion, later revealed that the French government had come to an understanding with Syria and Abu Nidal, which allowed Abu Nidal operatives safe passage provided they did not attack French targets.[38] In summary, by 1974 the French government had the necessary tools with which to combat terrorism, but seemed quite satisfied to maintain a policy of capitulation and avoidance. In the instances of action taken against terrorists it was apparent that the French were willing to remove any substance from their actions, thereby negating any effective message to terrorist groups, the domestic public, and foreign governments. The credibility of France as a partner in counterterrorism was not only in question, but remained a point of contention for governments, such as in Germany and Britain, which were actively pursuing terrorists. In the quest to avoid terrorism, France would not only prove to be naïve, but would lose the confidence of its European partners.

Continuity in Policy, 1975-1980

Despite having created the institutions and structures necessary for responding to the threat of terrorism, the French government chose instead to maintain its past position, even though the threat of terrorism was increasing. The police, the intelligence agencies, the Armed Forces, the special forces, and the courts had all been somewhat altered, reflecting the belief that terrorism represented a criminal threat of special significance. The French government did not require a definition of terrorism, but rather chose to maintain terrorism in policy formulation as a criminal matter. Hence, terrorism did not represent ordinary criminality, nor did it resemble a form of war in France. This belief and the resulting attitude which defined the French response to terrorism would not change to any significant degree for some time, quite unlike the procedures in place in Germany and Great Britain.

Between the end of 1974 and 1976 a number of terrorist groups established themselves on the French political scene, yet there was no distinct change in counterterrorist methodology, structure or attitude. By the end of 1974 the Corsicans began to lose patience with the French government and its perceived continuation of imperialism; a number of Corsicans established the terrorist group *Ghiustizia Paolina* to promote Corsican nationalism and destroy the French presence there.[39] France was now facing a similar situation to that which occurred during its phase of colonial withdrawal. The degree of violence in Corsica would increase exponentially, however, before concrete measures were taken by the government.

In 1975 yet another terrorist group, GRAPO, was formed in France,

ostensibly for the purpose of attacking Spanish interests.[40] Additionally, the Armenian Secret Army for the Liberation of Armenia (ASALA) began operations in France, concentrating its initial attacks on Turkish targets.[41] The infamous terrorist called Carlos attempted two rocket attacks on El Al flights in six days in January.[42] After the second attempt, twenty hostages were taken by the PFLP-GC cell acting on orders from Carlos and were allowed to leave France unmolested.[43] On June 27, 1975, two DST agents and an informant went to an apartment which was rented by Carlos. All three were killed and Carlos disappeared.[44] Despite the countermeasures previously instituted, France appeared unprepared for spectacular terrorist incidents. In response to these incidents the French government expelled three Cuban diplomats for "supporting the Carlos network"[45], which was likely discovered by the DST. That organization improved its ties with the SDECE as a direct result of the discovery of foreign involvement in the affairs of France and because the activities of the terrorists had embarrassed the country. The DRG expanded its operations against terrorism, but this led to ill feelings between them and the DST. The latter organization, angered by the encroachment of the DRG into what was perceived to be DST territory, quietly established or expanded its operational intelligence against terrorists.[46] Thus, France's intelligence agencies began taking a greater interest in terrorism due to embarrassment and bureaucratic rivalry, rather than due to instructions from senior government officials. Policy did not change, but the increased role of intelligence almost certainly gave the French government more information with which to formulate future responses.

In 1976 there were a number of incidents that displayed both the capabilities of France in counterterrorism and the inability of the government to be consistent in its response to terrorism. In February, six terrorists seized a school bus containing 31 French children in Djibouti, near the site of a French army base. In a decisive response the French government dispatched GIGN to the scene with the intention of resolving the situation. With the cooperation of the Foreign Legion, all six terrorists were killed and the children were released.[47] While this incident was consistent with a policy of no concessions, it neither defined a new French policy nor reflected a harder line. Other incidents and events would reconfirm past policy.

In 1976 the French government was faced with a deepening crisis regarding its position in Corsica. The *Front de la Libération Nationale de la Corse* (FLNC) was established, ushering in a new and extremely violent era in the region. The political cover group *Action pour la Renaissance de la Corse* (ARC) was banned by the government, but was replaced by the *Associu di Patrioti Corsi* (APC), led by the Siméoni brothers, who were regarded as leaders of the Corsican resistance movement.[48] In one of their most spectacular attacks on French targets, the FLNC destroyed an Air France B727 at Ajaccio Airport.[49] France could ill afford either to disregard or underestimate the threat of terrorism in Corsica alone, along with activities in other parts of French territory. Airport security would require improvements, as would countermeasures aimed against the FLNC. In another incident involving an aircraft, Croatian terrorists landed their hijacked plane on French soil; the authorities refused to negotiate with the terrorists, probably because "no French nationals were involved".[50] The

banning of the ARC, the assault at Djibouti, and the Croatian incident all combined to suggest that French policy toward terrorism appeared to be in a state of transition.

However, two related incidents in 1976 indicated that the French were not yet prepared to commit themselves to a strong policy against terrorism. The authorities arrested Wilfrid Böse, wanted by Germany for activities associated with the RAF. While Germany requested extradition, the French transported Böse to the border and released him. A short time later he was involved in the hijacking of an Air France A300, which was successfully liberated by the Israelis in their famous raid on Entebbe.[51] The combination of humiliation and the frequency of terrorist attacks only served to heighten French concerns regarding their asylum tradition. Before the end of 1976 the French government expelled 3595 foreigners, believing that a reduction in foreign residents would decrease terrorist activities.[52] France's security policy was not significantly altered, despite a clear need for change. Continuity in avoidance remained a central theme.

In 1977 the government communicated the intention to stay removed from any concerted effort to battle terrorist groups. On January 3, French police spotted Abu Daoud and arrested him, only to have the government order his immediate release.[53] Although the German and Israeli governments had both requested extradition, the French government chose instead to deport Daoud to Algeria, where lucrative oil contracts awaited French firms. Also, the release confirmed the French policy of avoidance in the face of terrorist activity. The decision resulted in a diplomatic crisis of sorts, with the Israelis deciding to recall their

ambassador in protest. In addition to this incident, the French, who had released Jean-Marc Rouillan from prison despite knowing he was a terrorist leader[54], were unable to assist the Germans in their search for Hans-Martin Schleyer, who was eventually found at Mulhouse, France,[55] and began a long process of appeasement toward the Bretons, including concessions such as allowing more Breton language in schools, greater economic investment in the region by the state, and more Breton-language television.[56] Furthermore, a report to the Minister of Justice, Alain Peyrefitte, regarding violence in France hardly even mentioned terrorism.[57] The threat was downplayed by the government, and it seemed that counterterrorism would not receive any new attention. When questioned about the lack of effective countermeasures taken by the government, Peyrefitte said "It is not possible to reply to terrorism by a state terrorism which would draw us into a spiral of terrorism".[58] Despite criticism from abroad, a growing terrorist menace and a series of public embarrassments, the government refused to alter its policy on terrorism. It would become increasingly apparent that this trend would come under greater pressure, although France would be subjected to more violence before there would be any substantial change.

Although the French government had made a mockery of counterterrorism in previous years, by 1978 that attitude began to change. The FLB-ARB alone had committed 206 terrorist attacks since 1975[59], but unwittingly contributed to its own demise by bombing one vital target: the Palace of Versailles.[60] Causing an estimated £500,000 in damage to national treasures such as a portrait of Napoleon, Giscard d'Estaing said the attack had also caused "lamentable damage to a part of France's

heritage".[61] The immediate reaction to the attack was quite unlike previous behaviour, with the police and the intelligence services combining forces to effect the arrests of 39 FLB-ARB terrorists within the next few months.[62]

Other measures were taken to give the impression that France was less willing to tolerate its terrorist population. Jean-Marc Rouillan was re-arrested in 1978 and sentenced to six months' imprisonment for his part in a GARI terrorist attack on a Spanish target[63]; the sentence was lenient, but symbolic. After the kidnapping of a prominent Belgian industrialist, the concept of *flagrant délit* was expanded to provide the police with the power to search any vehicle for suspected terrorists or weaponry, and such searches could be conducted at random, rather than only after evidence could be collected to arouse suspicion.[64] Serious discussions began in France regarding the ownership and possession of weapons, and proposals were made to ensure long prison sentences for convicted terrorists.[65] The Paris police expanded the Criminal Investigations Department and charged that unit with responsibility in pursuing criminal charges against terrorists.[66] Most importantly, the DST was reorganized into three distinct divisions: Counter-Espionage, a Technical Group, and Counter-Interference (CI).[67] The DST-CI was further divided into three subsections, including one for European and Middle Eastern affairs, one for terrorism alone, and one for Cuban and Latin American counterintelligence. Greater cooperation was established between the DST and the Paris police, and the DST received a greater role for combating terrorism. The matter was considered a criminal problem with special significance and ramifications which required unconventional

reactions. Around this time, the DST began operating against Corsican terrorists because it became known that Col. Qaddafi had trained some of them and because the FLNC was a growing threat. Overall, France appeared to be reversing its previous policy regarding terrorists, but that policy direction was undermined by the government's decision to use the DST to strike a deal with Abu Nidal in an effort to keep his group from targeting French nationals.[68] Despite appearing to toughen its approach to terrorism, France effectively negated its own responses by sending mixed messages to terrorists.

By 1979 the government mandated all overnight residences to fill out lodging cards on every customer, all of which would be given to the authorities daily so they could use them to track suspected terrorists and other criminals.[69] GIGN was called upon to assist the Saudi government in its effort to remove violent fundamentalists from the Grand Mosque in Mecca, which capped over 100 operations for GIGN since its inception.[70] Furthermore, the government removed refugee status for ETA terrorists fleeing the Spanish authorities, effectively eliminating their safe haven.[71] Still, mixed messages were sent to terrorists once again. Concessions were made to Brittany, apparently as a result of the activities of the FLB-ARB, and the government more than tripled its economic aid to Corsica, giving that region over four times the per capita aid than elsewhere.[72] Not only did French policy appear confusing and inconsistent, but an omen was apparently ignored. NAPAP and GARI combined forces to form *Action Directe*, a terrorist group which would haunt France for a decade, and the *Factions armées révolutionaires libanaises* (Lebanese Armed Revolutionary Faction; LARF or FARL) was created.[73] Both groups would usher in a

new wave of violence that the French government would be unable to ignore.

Terrorism Escalates, France Responds?

The terrorist threat to France was clearly on the rise, but the government was hesitant to institute more countermeasures, choosing instead to rely on existing structures and traditional methods of fighting crime. France cooperated with Germany in dismantling an RAF cell in Paris, finding a botulism laboratory in the process.[74] GIGN successfully stormed a hotel in Ajaccio, where FLNC terrorists had seized a number of hostages.[75] GIGN had enjoyed such success that the number of hostage incidents had dropped from 18-20 per year in 1973 to three or four per year by 1980.[76] After a series of bombings by AD, the French government encouraged the arrest of leading figures in that group. The DRG responded to the request by the government by arresting the two most dangerous and experienced terrorists in that group, Nathalie Menignon and Jean-Marc Rouillan.[77] By the end of 1980 the government had banned 14 right-wing terrorist groups, 14 leftist groups, and five others in a symbolic move away from tolerating terrorism.[78] By doing so, the government was able to expand its criminal law response to include such activities as belonging to a proscribed organization. The combination of efforts, however, was insufficient to quell a rising threat to France.

Two important scandals rocked the French counterterrorist establishment in 1980, causing the government to lose confidence in its own security forces. First, when the *Féderation d'Action Nationale Européenne* (FANE) was banned, it was discovered that up to a third of its membership

were police officers.[79] The second major scandal involved GIGN, when the second in command of the antiterrorist squad was arrested for allegedly supplying weapons to neo-Nazi terrorist groups in Germany.[80] These alarming indiscretions betrayed the public trust, caused the government to mistrust its own response units and personnel, and raised serious questions about the commitment of security personnel to maintain high standards of personal conduct. Additionally, the timing of these scandals could not have been worse; France was beginning to enter its own phase of serious disorder from terrorism and would certainly require a professional security structure. The result of this essentially left France poorly prepared for the growing threat.

The storming of the Iranian embassy in London that year had caused a number of Middle Eastern terrorist groups to relocate to Paris for another round of internecine warfare.[81] The main offices of the DST were bombed[82], the FLNC increased its attacks to 463 for the year[83], violence from both the Left and Right appeared to be on the increase, and France was about to come under heavy attack for its Middle Eastern policy. Strong and effective countermeasures were required immediately, as France was due to experience the intensity of violence already dealt with by the German government. Instead, France inexplicably chose to implement policies that were directly opposite to those needed.

In addition to a significant internal terrorist threat, France also faced growing opposition from Middle Eastern countries regarding matters of foreign policy. The war in Chad had pitted French troops against the Libyan army, and the lack of success on the part of the Libyans provided Col. Qaddafi with an excuse to sponsor terrorist activities against French

targets in an effort to exact revenge. Secondly, the French effort to maintain a presence in Lebanon provided an excuse for the Syrians to respond in a similar fashion. Additionally, French support for Saddam Hussein in his struggle against Iran, combined with a large Iranian opposition movement in France, gave the Iranians a justification for sponsoring terrorist activities against French interests. In summary, various Muslim countries decided to wage an alternative form of war against France.

French counterterrorism policy fluctuated wildly in 1981, with examples of three different approaches to terrorism. On the one hand France employed solid countermeasures through the use of its antiterrorist unit. Second, France chose to retaliate against the use of state-sponsored terrorism. Third, the French government struck deals with terrorists, which was a response from the opposite end of the spectrum. All these countermeasures combined to suggest that no single policy was functioning and no clear message was communicated to terrorist groups, foreign sponsors, the domestic population, and friendly foreign governments. Such vacillation did little to enhance France's image.

The successful use of GIGN represented a willingness by the French government to utilize correct and effective antiterrorist measures. By 1981, GIGN had freed some 212 hostages from their captors.[84] Additionally, GIGN successfully resolved a potentially dangerous hijacking incident. Lawrence James Downey, reportedly a lunatic, seized an Aer Lingus plane, demanding the third secret of Fatima. Although the act of this single person may or may not have been terrorism, the fact remains that GIGN was able to convince the man to surrender to the authorities,

and the antiterrorist unit was certainly prepared and able to have stormed the aircraft.[85]

Other French actions made use of a completely different type of response to answer challenges to French foreign policy in the Middle East. The Syrians were actively engaged in a struggle to remove French peacekeepers from Lebanon, so that Syria could exercise greater control over the region. Rather than engage French troops directly, the Syrians chose to utilize terrorism as a tool of policy. French targets in the region were repeatedly bombed, apparently with the support and encouragement of the Syrian government. In August 1981 the French ambassador to Lebanon was assassinated by Syrian intelligence personnel.[86] In response to these outrages, France "probably" retaliated by detonating a bomb on November 29, 1981, in Damascus, killing 64 and wounding 135.[87] In addition to this specific instance the French government apparently ignored the activities of GAL and FRANCIA; the former attacked ETA members while the latter attacked FLNC activists.[88] France appeared to have no single policy, preferring instead to respond to terrorist activity on an *ad hoc* basis.

Proper countermeasures through the use of special forces and retaliation were not the only tools France used to combat terrorism in 1981. In accordance with the traditions of the 1970s, the French government attempted to deal with the Armenian Secret Army for the Liberation of Armenia (ASALA), offering them free movement in exchange for their promise to refrain from bombing targets in France.[89] This decision was either not communicated to the police or ignored by them; Dimitriu Giorgiu, a leader of ASALA, was arrested. The deal fell through when ASALA

stormed the Turkish Consulate in Paris and bombed Orly Airport to protest the arrest of Giorgiu.[90] The French government released Giorgiu within 48 hours.[91]

A fourth and major policy expression was made by the Mitterrand government in 1981. In a tragic and incomprehensible mistake by the French government, five important changes in national action were implemented, demonstrating a significant policy shift. First, capital punishment was abolished, negating any possible deterrent as a result of strictness. Second, France was reconfirmed as a safe haven for political refugees, even if they were actually terrorists. Third, the French government announced its refusal to cooperate with other European states in matters of extradition. Fourth, thousands of violent criminals were released from prison, including at least 31 convicted terrorists. Two of those were Jean-Marc Rouillan and Nathalie Menignon, the principal leaders of AD.[92] Fifth, the French government abolished the State Security Court, which had been established during the Algerian conflict and had jurisdiction in criminal proceedings against terrorists. Overall, there was no clear policy in 1981 until Mitterrand announced his policy shifts, which were intended to alleviate the terrorist threat in France by not threatening the terrorists. France would be ruthlessly attacked by violent criminals as a direct result of this failure to take strong countermeasures. The government would be forced to realize its mistake within a very short period of time.

By 1982 the government began to realize that the policies implemented the previous year were not having any positive effect on the terrorist community. The FLNC detonated more than 800 bombs in that

year alone,[93] a nuclear reactor was hit by four rocket-propelled grenades,[94] and France was subjected to numerous attacks by a variety of groups. The 1981 policy changes had failed miserably and the government was becoming aware of that fact. Italian terrorists had taken refuge in France, much to the chagrin of the Italian authorities, but France was unwilling to extradite them. In a scathing attack on French policy in 1982, Judge Ferdinando Imposimato of Italy expressed frustration with France:

> For a long time now, we in Rome have had evidence that terrorism has rooted itself in France and that Paris has become a remarkably well-organised base for terrorist operations . . . We deplore the fact that the French authorities have not reacted with more interest to our information and warnings . . . International terrorism has been strangled in Germany, and has suffered serious setbacks in Italy. Driven out, or almost from these countries, it has taken refuge and is recuperating in Paris.[95]

The combination of international castigation and domestic pressures caused the French government to rethink its policy positions of 1981.

Two general themes in 1982 reflected France's schizophrenic approach to countering terrorism. First, deals were attempted with a variety of groups in order to reduce terrorist activities. When a group of ASALA terrorists went on a hunger strike in a French prison, they were awarded political status and ASALA ceased its attacks for a short period of time.[96] Gaston Defferre, the Minister of the Interior, said "During Giscard d'Estaing's term as President, people were taken into custody, arrested and then released . . . Today, we do not act like that".[97] Shortly thereafter the police arrested Vicken Tcharkoutian, an Armenian terrorist wanted for a bombing in the United States. ASALA threatened the French government with reprisals and carried out an attack designed to gain the release of

their imprisoned comrade. Tcharkoutian was released by the French authorities and flown to the Middle East.[98] Further evidence of avoidance came from a surprising source. Captain Paul Barril, the head of GIGN, was instructed by the government to attempt to strike a deal with AD. In a note written on GIGN letterhead, Barril proposed an amicable surrender of the leader, Jean-Marc Rouillan:

> I, Captain Paul Barril, commander of the GIGN, commit myself to ensure the physical protection of Jean-Marc Rouillan, and to present him directly to a magistrate. I further commit myself to give evidence in his favour of the fact of his voluntary appearance before the legal authorities.[99]

The proposal was rejected by AD and it subsequently continued with its bombing campaign. AD was banned by the French government shortly thereafter.[100]

Two incidents of particular notoriety forced the government's hand in the latter half of 1982. ASALA bombed the Turkish Airlines desk at Orly, killing 7 and wounding scores of others. A bombing committed by a different group at a Jewish restaurant killed six and wounded dozens of others. Major efforts by the French government to control terrorism started immediately. First, more than 50 Armenians were arrested, which effectively halted Armenian terrorism in the short run.[101] Second, the government reversed its previous stance by announcing a host of new countermeasures.

Policy changes by the government at this point affected twelve different areas of French counterterrorism. A position was created called the Ministry of State for Public Security, headed by Joseph Franceschi. A position of permanent adviser to the President on matters involving terrorism was created. The Central Office for Repressing Traffic in

Weapons and Explosives (CORTWE) was created to control the flow of illicit materials into and within the country. Two senior Syrian diplomats were expelled from the country for activities in support of Arab terrorists within France. Immigration was tightened, with greater screening of applicants required under the new policy and the government increased the use of surveillance against foreigners on French soil. Budgets were increased for the *Gendarmerie nationale* and other police forces, all of which increased their staffing levels. A centralized computer system was established for the purpose of locating and tracking known terrorists. Cooperation with other western European countries was increased. The *Conseil nationale de sécurité* (CNS, or National Security Council) was created as a permanent body at the highest political level for combating terrorism, and included the President and the ministers responsible for Interior, Security, Justice, Foreign Affairs and Defence. The military, largely through the gendarmerie, was given primary responsibility for fighting terrorism.[102] By instituting these changes it appeared that the French government was less willing to tolerate terrorism, more willing to fight it, and perhaps had come to the realization that an inconsistent policy based on avoidance, appeasement, deal-making, correct measures, and retaliation had not saved France from the scourge of terrorism. By any measure at the time it appeared that France had moved its position to the opposite end of the response spectrum; the empirical record over the next few years would determine if France was willing to use these tools in combination with political will for the purpose of eliminating terrorism.

In 1983 it appeared that France was willing to respond forcefully to terrorism in accordance with the policy shift announced the previous year.

Part of the reason for the shift was the level of terrorism aimed against France, or committed against targets on French soil. In addition, France had experienced 126 attacks against its diplomatic community between 1977 and 1983, which was a higher level than the Americans had endured in the same time frame.[103] On July 15, 1983 an Armenian terrorist detonated a bomb at the Turkish Airlines counter at Orly, killing 8 and wounding 60, including four French citizens.[104] Using the DST, the terrorist groups ASALA and AD were hounded to a greater degree than had been the previous pattern. This signalled the rising importance of French intelligence in the battle against terrorism, and showed the willingness of the government to involve the DST in domestic terrorism as well as foreign subversion. Essentially, the French government began to realize the importance of good intelligence in the fight against terrorism. Due to the number and ferocity of terrorist attacks in Corsica, the French government banned the FLNC and the political front group CCN as an expression of greater political will.[105] The French public, now subjected to far more terrorism than had previously been the case, took greater notice of government action; two-thirds of the public wanted special jurisdictions and sentences for terrorists and 62 percent wanted a higher degree of security.[106] The rising number of attacks by the GAL against the ETA on French soil alarmed the government to such a degree that it tightened its immigration procedures beyond the 1982 declarations; part of this crackdown was due to concerns expressed by the Spanish government.[107]

Two related events in 1983 suggested that the French were willing to use retaliation against terrorism. On the same day that Hezbollah bombed the US marine barracks in Lebanon, killing 241, a similar attack

against the French barracks killed 56 and prompted the French government to withdraw its forces from Lebanon.[108] The French government was so infuriated by the terrorist attack and the number of casualties suffered that plans were immediately made to retaliate against those responsible. The French armed forces organized an air strike at Baalbek in the Bekaa Valley, hoping to decimate or discourage the terrorists. On November 17, 1983, the French air force bombed the area, but failed to hit the intended targets. It was later revealed that the Foreign Ministry under the leadership of Foreign Minister Cheysson had leaked a warning of the air raid to the terrorists.[109] The event exposed a major rift between the Foreign Ministry and the Interior Ministry, with the latter placing its emphasis on law and order rather than the improvement of relations with Middle Eastern states. Concerned that its role in counterterrorism was being undermined by the forces of law and order, the Foreign Ministry essentially compromised French national security in the interests of its own bureaucratic goals. Its elevated position in the fight against terrorism would begin to erode.

Although the French appeared to be dealing with terrorism in a more effective fashion than had been the case in previous years, a single incident brought into question the commitment of the government in combating terrorism. Another note was written by Captain Paul Barril to the leader of AD, proposing negotiations between the highest levels of government and the terrorist group. The letter, which included the official GIGN insignia, stated:

> Monsieur Rouillan,
>
> I should like to meet you personally, where and when you wish, in order to open a dialogue which could permit the regularisation of your position. I am authorised by the

Presidency to deal directly with you.
A bientôt j'éspère, Paul Barril.[110]

In essence, despite strong evidence to suggest that the French government was willing to use its 1982 reforms in a crackdown against terrorists, and had even gone to the extent of attempting a retaliatory strike against a terrorist stronghold, other evidence suggested that French policy was still in a state of vacillation. The use of its antiterrorist unit to attempt negotiations with AD completely undermined the efforts of the previous year. Additionally, it became apparent that a power struggle was underway between two senior branches of government. It was therefore clear that France had not yet managed to attain maturity in counterterrorism.

In 1984 the French government continued to display some degree of confusion regarding measures against terrorists, although a number of successful and encouraging developments occurred. The head of LARF, Georges Ibrahim Abdallah, surrendered to the police in Lyons because he feared that he was being followed by the Mossad. In truth, the DST had him under surveillance, but the capture of this important terrorist leader scored a major blow against LARF.[111] The combination of GAL attacks in France against the ETA and Spanish pressure caused the French government to reverse its policy on asylum for ETA members; three terrorists were extradited directly to Spain for the first time.[112] Although the government attempted to establish a regional assembly for Corsica, the FLNC increased its activities, setting over 1300 bombs between 1982 and 1984 alone.[113]

Faced with this degree of terrorism the government was forced to respond with two major measures. First, the 8th Section of the Public

Prosecutor's Office was established as the central unit responsible for pursuing criminal charges against terrorists.[114] In a second major move, the government further centralized counterterrorism by creating a coordination unit called *Unité de Coordination de la Lutte Anti-Terroriste*, or UCLAT. Established under the control of the National Police, UCLAT became "responsible for collating and distributing all information in the shortest possible time",[115] and this specialized unit was able to reinforce the activities of the police and the intelligence services without direct involvement from the President's office.[116] However, the French government displayed a degree of inconsistency by entering into negotiations again. François de Grossouvres, a close associate of Mitterrand, headed negotiations that included Syrian intelligence, represented by Rifat Assad. The talks regarded Syrian activities and involvement with certain terrorist groups, the PLO and the Corsicans.[117] The French intermediary to Corsica was assassinated, ending that section of negotiations, and Mitterrand sought peace with ASALA by publicly supporting their cause.[118] Once again, France at least partially negated its growing strength in counterterrorism by entering into controversial negotiations. Mixed messages were sent to terrorists just as France was entering the worst phase of terrorism since the Algerian war.

Counterterrorism Matures, 1985-1994

By 1985 France appeared to be changing its structures and policies in such a fashion as to fall in line with other European states, although there were certainly occasional incidents which suggested that the government was not entirely willing to be consistent. One of the reasons

for this type of behaviour on the part of the French is that, contrary to the terrorist threat in Germany and Britain, France experienced a greater threat from Middle Eastern sources and accordingly believed that it could avoid terrorism by occasionally neglecting its duties as an emerging state within the counterterrorism community. The problem, in essence, is that all states maintain a differentiation between foreign and domestic sources of terrorism. Foreign terrorism can be complicated because it may involve, say, a French national, a foreign government, a foreign terrorist group, and a foreign public. These matters cannot be easily resolved by the projection of power overseas, which is a blunt instrument when a sharp one is needed. Intelligence services and police forces face insurmountable obstacles in attempting to locate a hostage, including the fact that French police cannot normally be deployed outside French territory. In addition, it may be politically more acceptable and less damaging for a government to concede to certain demands than it would be to create a larger crisis by a failure in overt or covert intervention. While all European states faced this problem and found their own solutions to the dilemma, France also dealt with foreign terrorists as they saw fit. French policy, for the most part, was in a state of transition.

There was a sharp increase in terrorist activity in France in 1985, including a merger between AD and the RAF. With the two forces combined the frequency and ferocity of attacks increased, and prominent individuals were targeted by these Euroterrorists. One such victim in January 1985 was General René Audran, head of the Engineering Corps of the French army.[119] Another incident involving a foreign terrorist did little to prove to friendly governments that France was completely serious about

counterterrorism. US intelligence sent a warning to the French authorities that Imad Mughniyah was on his way to France. Although Mughniyah was wanted by the Americans for a 1982 embassy attack, "the French spotted Mughniyah and then let him go".[120] Other events would suggest that this type of behaviour was no longer a common feature in France.

In 1985 the French authorities made a series of raids on ETA safehouses, capturing and deporting some 30 terrorists to Spain.[121] Additionally, while there were about 120 Red Brigades terrorists avoiding the Italian authorities by staying in France, the French government appeared ready to deport these individuals by the spring of 1985.[122] While the government was under increasing attack by LARF, the Committee for Solidarity with Arab and Middle East Political Prisoners (CSPPA), and a host of other terrorist groups, the PLO offered its services as an information source against Abu Nidal, LARF, and ASALA in exchange for the continuation of French support in the international community.[123] Although the government considered trading Georges Ibrahim Abdallah for a French citizen held captive in Lebanon, the trade was never completed, largely because the French government realized that there was a substantial amount of public support for keeping Abdallah in prison.[124] The most significant measure taken by the French government in 1985 was the creation of a second specialized antiterrorist squad, the *Unité de recherche, d'assistance, d'intervention, et de dissuasion*, or RAID.[125] This unit was similar in form and function to GIGN, GSG-9, and the SAS; RAID was responsible to the Director General of the National Police and, as such, retained powers of arrest. Despite this move, France would embark on a more ambitious course of radical change the following year.

The degree of terrorism increased dramatically in France in early 1986, with attacks coming from a variety of groups, including AD, LARF, CSPPA, the RAF, the FLNC, some other less known operations, and quite probably the intelligence services of Libya, Iran and Syria. France was under siege from terrorists, and 70% of French citizens believed they were in a state of war.[126] The intelligence services had gone through a recent reorganization and appeared incapable of handling the onslaught of political violence. France was forced to absorb the killing.

In March 1986, Jacques Chirac called for and received greater resources for the intelligence services, realizing that this constituted France's best hope for preventing a continuation of the high level of terrorism.[127] Since the goal of much of the terrorist activity emanating from the Middle East was to alter French policy in the region, France began to cool relations with Iraq, particularly involving the sale of weapons. Chirac sought to improve relations with Iran, but was also faced with French hostages being held in Lebanon. In a statement made just before negotiations with Iran began, Chirac said:

> A nation with the responsibilities of Iran must be beyond suspicion of any terrorist acts involving hostage taking [sic]; the prerequisite for any normalisation of relations is that the officials of that country do everything in their power to contribute to the resolution of the problem of the French hostages.[128]

Iran demanded the repayment of loans made by the Shah and also requested that opposition movements in France be expelled or controlled. In June 1986, Chirac ordered the expulsions of Mahmoud Rajavi and a number of other Iranian dissidents; within two weeks, two French hostages were released from captivity.[129] Meanwhile, LARF continued with its demands for the release of Abdallah and the ASALA terrorist, Varoudjian

Garabedjian. France negotiated with the Lebanese-based group in the summer and apparently agreed to release the pair in exchange for Gilles Peyrolles. The latter was released, but France chose to rescind the deal after the fact. LARF responded with a stern threat to France:

> France should start adopting the needed steps and procedures to release Armenian as well as Arab patriots. A truce-like period of calm between us and the French government must have convinced public opinion that we respect the interests and security of the French and other people. The wave of explosions will return to the streets of France; all French economic, air traffic and marine facilities will be subjected to sabotage.[130]

France refused to yield to the threat; LARF and other terrorist groups would attack France in all their fury by September.

While French security forces were unable to prevent the bombing of LaBelle Disco in April 1986, the government responded shortly thereafter by expelling two Libyan diplomats for their alleged role in the attack.[131] A combination of good intelligence and police alertness proved effective in at least one important case, when "the French prevented a slaughter at the visa line at the U.S. Embassy in Paris" that same year.[132] France appeared to be taking better notice of possible threats to security and scored a major success by preventing a horrendous attack on American embassy staff and prospective citizens and visitors. Important changes to structures and laws to improve counterterrorism efforts, however, would not be undertaken until the massive bombing campaign of September.

Fully aware that there was an increased possibility of terrorism within France in the near future and already aware of the dangers posed by the CSPPA and LARF, France began discussions with Algeria regarding a mutually beneficial agreement. In exchange for economic support and deporting enemies of Algeria, the French government was able to use

Algerian intelligence to assist in negotiations with LARF and in the surveillance of other Muslims in France.[133] In addition to providing surveillance of potential Muslim extremists, "the French government looked the other way while the Algerian secret services physically eliminated others".[134] This development signalled at least two problems for French counterterrorism. First, it was possible that the French intelligence community was not prepared for the onslaught of terrorism given the recent reorganization of the services. Second, the Algerian deal gave the French the opportunity to respond to terrorism in the harshest possible manner while maintaining plausible deniability. In either event, France was still exposed to an extensive assault by various groups, which led to the most sweeping changes in French policy that had been seen in years.

In the short span of two weeks in September 1986, at least 200 French citizens were killed or wounded by terrorist attacks. Believing that the Iranians were responsible for at least some of the attacks, France ceased its efforts at normalizing relations between the two countries. "We are going to terrorize the terrorists", exclaimed Minister of the Interior, Charles Pasqua.[135] Further diplomatic negotiations with Syrian and Iranian officials seemed out of the question. Outraged by the attacks, Chirac promised that the response by France would be "crushing and without weakness". Appearing on national television, Chirac also said:

> We will do everything -- and I mean everything -- to punish without pity the assassins and those who manipulate them . . . The assassins, I assure you, will not escape us . . . We will wage this fight to the end, with the help of all and with respect for the fundamental rules of our democracy.[136]

The statement by Chirac was a clear warning to terrorists that substantial changes in French counterterrorism were already under way. Discussions

at the highest possible level between France and Syria, combined with Algerian and French intelligence efforts, led to the decimation of LARF.[137] Additionally, a Muslim Brotherhood cell was smashed by the DST in December.[138] Continuing pressure from other terrorist groups, however, convinced France to alter its policies.

One of the first changes involved removing the status of lead agency for counterterrorism from the Foreign Ministry and granting it to the Interior Ministry. The government also announced reduced sentences for terrorists who would come forward and provide information which could be of use in preventing further terrorist attacks.[139] The authority of the police to apply preventive detention was increased, allowing for four days of questioning without the presence of an attorney; stiffer penalties were requested by the government in terrorist cases; random identity checks were undertaken by police and they were given the authority to arrest anyone who refused to comply with an order to produce papers; resources were increased for police and intelligence services and some magistrates became specialists in terrorist cases.[140]

Categories of offences were created that could be considered 'terrorist' in nature, complementing the inductive approach to a definition of the threat. First, personal offences such as murder, assassination, serious bodily injury, or abduction could be treated in a different manner than conventional cases. Second, attacks on property involving a danger to the public became another classification, which included destruction of monuments or public utilities by explosives or arson; destruction by explosives or incendiaries; breaking into houses for the purpose of intimidating magistrates, juries, lawyers, or witnesses; theft or burglary

by two or more persons at night or with violence; extortion; and the use of any means to derail or provoke a collision involving a train. Third, offences could be recognized as 'terrorist' crimes when evidence could show the preparation for the offence, including conspiracy; production or possession of murderous devices, incendiaries, or biological weapons; and possession or transportation of certain types of weapons.[141]

Another important change came as a result of the activities of terrorists while in court. The Germans and the British had already dealt with serious disturbances in court and threats to jury members. In December 1986 a number of AD suspects were placed on trial, including Régis Schleicher, for terrorist offences. When Schleicher threatened vengeance on the jury members, a number of them asked to be excused from court and the trial was postponed.[142] In response to this intimidation the French government introduced juryless courts retroactive to September 1986, in which seven professional judges would determine the fate of the accused.[143] This change essentially returned a form of the State Security Court to having jurisdiction in extreme circumstances. Additionally, a special unit was created called the *Service Central de Lutte Anti-Terrorist*, or SCLAT, within the 14th Section of the Public Prosecutor's Office.[144] This branch of the judiciary could compile information and bring charges against terrorists, effectively giving the unit the power to determine which cases would go before the special courts. In summary, France had dramatically altered its approach to terrorism after enough destruction had occurred to provoke concern among the public and the government itself. Repeated attacks by domestic terrorists were no longer treated lightly, nor were any attacks associated with foreign groups or

governments. France moved sharply toward a hard line when dealing with terrorism.

A number of developments in French counterterrorism took place in 1987, all of which provided strong empirical evidence that France had rounded out its structural problems in the counterterrorism field and, perhaps more importantly, had altered the previous attitude of avoidance and tolerance with stronger political will to crush the terrorists. Having been the victim of the aspirations of so many terrorists, French people and their political leaders opted for a position more closely reminiscent of Great Britain, Germany, Italy, and the Netherlands. Using the expanded resources of the intelligence services and the police along with higher political interest and direction, France served notice to terrorists, sympathetic groups and sponsoring states that terrorism would no longer be seen as a passing and foreign phenomenon. Terrorist groups would be treated with the contempt they deserved.

The first indication of a switch in French policy occurred on February 21, 1987, when four of the five remaining leaders of AD were arrested near Vitry-aux-Loges, including Menignon, Rouillan, Jöelle Aubron, and Georges Cipriani.[145] The police and intelligence services had been specifically told to eradicate the group, and they utilized a reward system for the first time in France, offering $180,000 for information on the terrorists. A friend of the group chose to collect the reward, essentially becoming a paid *pentiti*.[146] The DST performed the second important piece of counterterrorism work early in 1987 by arresting Abbas Hamadei, who provided the intelligence service with information about a terrorist cell operating from a Tunisian restaurant in Paris. That cell was smashed after

a period of surveillance, and the terrorists were found in the possession of a large quantity of methyl nitrate. Another cell was captured a short time later by the DST.[147] By this time it was clear that the DST was the lead agency for countering terrorist activities in France. Having recovered from the troubles of reorganization the DST (and the DRG) were utilized to a greater degree by the Interior Ministry. The latter had a two-point strategy for the DST when in 1987 it was announced that both the quantity and quality of intelligence would be increased substantially.[148] It was now clear to France that good intelligence was the key to counterterrorism, and the change marked France's ascendancy to the apex of development in the modern battle against terrorists.

The Interior Ministry added two more agencies to its counter-terrorism structure, including the *Police de l'Air et des Frontières* and the *Police Urbaines*.[149] Another command structure was established at the top of the French political system when the *Comité Interministériel de Liaison Anti-Terroriste* (CILAT) began weekly meetings to discuss terrorism and the French reaction to the problem. The committee was composed of representatives from the Prime Minister's Office, Justice, Foreign Ministry, Defence, Interior, and the Ministry of the Budget.[150] With a similar attendance roster as the CNS, which had been created in 1982, it remained unclear whether CILAT had actually replaced the CNS, although there is no evidence to suggest this occurred. In either event, there was a clear commitment on the part of the French government to consider all matters involving terrorism at the highest possible level.

France made a dramatic move to reinforce its new policy by ratifying the European Convention on the Suppression of Terrorism (ECST) by the

early summer of 1987, which committed France to principles developed a decade earlier such as the removal of political status for terrorist offences and the requirement of signatory states to extradite or prosecute any captured terrorist.[151] France and Germany established a secure computer link in order to exchange information on terrorists, and the French government chose to grant greater powers to the Ministry of the Interior by giving it the right to expel anyone suspected of terrorist activities by using executive authority and denying the suspected terrorist any legal recourse for appeal.[152] Additionally, at the G-7 meeting in June, France broke with tradition by stating its commitment "to the principle of making no concessions to terrorists or their sponsors".[153]

These actions were complemented by a series of concrete measures against terrorists in 1987. First, the Corsican Movement for Self-Determination (MCA), the new legal front for the FLNC, was banned.[154] Second, using its new executive authority, the Ministry of the Interior summarily expelled more than 150 ETA terrorists, who had used France as a safe haven from which to launch attacks on Spanish targets.[155] Third, some 200 terrorists were captured in France in the last few months of 1987 alone, signalling the determination of France to fight terrorism.[156] Finally, French policy was declared as the "refusal to give in to blackmail and unfailing determination to use all the available resources, the only limit being respect for the law".[157]

One incident in 1987 underscored the extent to which France was willing to go in order to rid itself of terrorist activities. French intelligence had determined that the CSPPA had been backed by Iran, and had bombed France in order to alter French foreign policy in the Middle

East. In July, when French police attempted to arrest an Iranian suspect, Wahid Gordji, he escaped by taking refuge in the Iranian Embassy in Paris.[158] The Iranians had been warned of the impending arrest by the Foreign Ministry in a classic case of bureaucratic bungling.[159] The Iranian Embassy was surrounded by French police, and the Iranians surrounded the French Embassy in Tehran; diplomatic relations were broken on July 17, and the French government sent the aircraft carrier *Clemenceau* and its escorts to the Gulf.[160] Open hostilities were a very real possibility at this juncture. The embassy standoff lasted until the end of November and relations were not restored until the following year.[161] Despite the inexplicable actions of the Foreign Ministry, France proved its mettle in combating terrorism.

The reforms France had undergone in 1986 and 1987 began to bear fruit in 1988. The authorities "scored a number of successes against terrorism"[162], including the imprisonment of 30 AD members for up to 13 years each.[163] During the trials, which were held before France's special court, AD members went on a hunger strike to seek political status and sympathy for their cause. The French government displayed its policy of no concessions by not allowing the strike to succeed.[164] In addition to this apparent dismantling of the notorious anarchist group, the French government also scored a huge success against *Iparraterrak* (IK) when the leader of the terrorist group, Philippe Bedart, was located and arrested, apparently as a direct result of information given to French intelligence by the ETA.[165] The only significant terrorist group remaining in France was the FLNC. A hard line policy on the part of France appeared to be succeeding.

France generally held to its tough policy throughout 1989, including a reversal in its previous policy of allowing Italian Red Brigades terrorists sanctuary in France,[166] but by 1990 it appeared that the Socialists under Mitterrand were slightly less than committed to this policy, although there were no changes in the established counterterrorism structure or procedures. First, the Silco affair cast some doubt on Mitterrand's willingness to comply with existing policy. In the summer of 1986 a pleasure yacht with eight French citizens aboard was seized by a Libyan gunboat. The victims were held captive by the Libyans until April 1990, when they were released in exchange for a French promise to return three Mirage jets to Libya in direct contravention of a European weapons embargo.[167] Second, Mitterrand allowed a permanent representative of Abu Nidal to be stationed in France, and Abu Nidal's intelligence chief was apparently "a frequent visitor to France".[168]

Despite these vacillations in policy the general thrust of French counterterrorism remained as it was defined between 1986 and 1988, which was basically centred on French unwillingness to concede to terrorism. The best example of the continuing commitment by France to hold firm in the face of terrorism in 1990 was the establishment of a group of offences which could be determined as 'terrorist' offences by SCLAT, thereby allowing trials to be conducted without juries. These offences included criminal association, voluntary homicide, threats, wilful violence leading to mutilation or infirmity, mortal blows, hostage-taking, abduction of a minor through violence, aggravated destruction, destruction with explosives, incendiaries or other dangerous means, petty and grand theft where it was associated with terrorism, extortion, hijacking, construction or possession

of a lethal weapon, possession of either of two classes of firearms, and the construction of biological weapons.[169] Virtually any illegal activity associated with terrorism could be prosecuted using France's special court and, most importantly, these laws were made permanent. Although it appeared that the French government was much more efficient at combating terrorism, the permanence of legislation suggested that France fully expected the war against terrorism to continue indefinitely.

The French commitment to battle the ETA continued in 1991, although some had suggested that the group had lost its previous relevance. The ETA, a strong nationalist/separatist group, proved stronger and more resilient than some experts imagined. The French authorities arrested the ETA chief of logistics, Jose Xavier Zabaleta Elasegui ("Waldo"), reflecting the policy of targeting senior terrorist officials.[170] Additionally, the battle between Iranian revolutionaries and opposition groups based in France intensified. Former Iranian Prime Minister Shahpour Bakhtiar and his secretary, Furush Katibeh, were assassinated by Iranian agents in August 1991.[171] One was captured shortly thereafter by Swiss authorities and handed over to the French.[172] While foreign fights still occurred in France, the arrest of the suspects suggested that French authorities were maintaining their tough policy.

Two incidents in 1992 reflected both an unwavering hard line policy and its direct opposite, demonstrating the Socialists' schizophrenic approach to counterterrorism. In the first instance the French authorities arrested a number of the top ETA leaders, including the head of the organization, Francisco Mugica Garmendia.[173] In the second instance, France moved sharply in the other direction, effectively creating a scandal

that rocked the foundation of the government. The leader of the PFLP, George Habash, was allowed entry into France for medical treatment. Although Mitterrand denied any knowledge of this and three senior civil servants were fired, the Israelis broke relations with France, calling the incident a "slap in the face".[174] Mitterrand's government faced substantial criticism from all quarters, including a censure motion sponsored by conservatives in the National Assembly.[175] At least three senior civil servants in the Foreign Ministry and the French Red Cross were sacked,[176] and the event signalled the possibility that the Foreign Ministry was attempting to regain lost prestige. The embarrassment may have been a contributing factor in the demise of the Socialists in France in elections that followed. The scandal completely contradicted French policy on terrorism and undermined France's position as a leading nation in the battle against terrorism.[177]

While 1993 remained somewhat quiet for scandals in France, four incidents in 1994 reinforced the image of France as somewhat schizophrenic regarding terrorism, albeit hard line. First, two Iranians who had been captured in France and were scheduled to be extradited to Switzerland according to a decision by a French court were instead deported to Iran, further eroding France's image in counterterrorism and causing strained relations with the Swiss.[178] The measure appeared to be the work of the Foreign Ministry, which has interfered with court decisions in the past, and which was seeking improved relations with Iran. The move also exposed the contradiction in styles between the Interior Ministry and the courts on the one hand, and the Foreign Ministry on the other.

The second major effort for France involved the capture by the DST

of Ilich Ramirez Sanchez, or "Carlos", with the apparent acquiescence of Sudan and Syria, in August 1994.[179] Convicted *in absentia* by the courts for the murders of two DST agents in 1975 and wanted for many other crimes, the capture of Carlos gave France the unique opportunity of holding the most wanted terrorist in the world. The third major incident in France in 1994 concerned the increasing threat to the country from Algerian extremists. Thousands are seeking exile to escape the FIS and its fundamentalism and violence, and the French authorities have jailed dozens of suspected or known terrorists.[180] Fourth, French authorities scored a major coup by arresting an important terrorist leader wanted by the Turkish government, who may in fact be the leader of the Kurdish Workers' Party, or PKK.[181] In the final three incidents, France appeared to have a hard line policy, but the other incident for 1994 throws that conclusion into some doubt. Nevertheless, France has moved slowly but steadily toward a hard line, and appears ready for a switch to no concessions under the right circumstances. An increase in threat from Algerians may provide France with that opportunity in the near future.

Summary

In 1968 the French government began to feel the effects of terrorism on a grand scale, just as their neighbours in Germany and Great Britain were experiencing. France, however, already had a number of specialized counterterrorism procedures, most notably the State Security Court. Despite this decided advantage, the French government experienced difficulty in the establishment of sound policy and countermeasures. The

vacillation displayed by the French government allowed terrorism to expand within the country.

In the 1970s France had made deals with terrorists to avoid their wrath, although some serious countermeasures were put in place. In the early 1980s, the government under the leadership of Mitterrand inexplicably began to dismantle its counterterrorism capacity, and paid a substantial price for that decision. Realizing after a very short period of time that a mistake had been made, the French government began to strengthen its countermeasures.

By the late 1980s, corresponding with a dramatic shift in French policy, the French public no longer appeared willing to coddle terrorists. Major successes were scored against terrorist groups and individuals by utilizing the specialized tools created by the government in the latter half of the 1980s. Specialized courts, laws, intelligence agencies, police units, paramilitary assault forces, and senior command structures had proven effective in the battle against terrorism. The only exception to the effectiveness of France as a major force in the counterterrorism community involved political decisions which contradicted the stated desires and goals of policy-makers and enforcement personnel. The Habash affair appears to have been an isolated event. In May 1993, when a lunatic seized a nursery school and demanded $18.5 million, RAID members quietly entered the building and shot the offender.[182] Although the offender could not be considered a terrorist, he was treated in the exact same fashion one would expect, given French structure and policy in this matter. The Habash affair behind them, the French have begun to take a position alongside other leading counterterrorist nations. France has neared the

apex of development regarding terrorism and will likely continue this trend for the foreseeable future.

Notes to Chapter Four

1. Neil C. Livingstone, The War Against Terrorism, Lexington: D.C. Heath & Co., 1987, p.177. The French used *commandos de chasse*, like the British pseudogangs in Malaya, to hunt down Algerian terrorists and guerrillas.

2. Edward Moxon-Browne, "Terrorism in France", Conflict Studies #144, London: ISC, 1983, p.25; Philip G. Cerny, "France: Non-Terrorism and the Politics of Repressive Tolerance", in Juliet Lodge, ed., Terrorism: A Challenge to the State, Oxford: Martin Robertson, 1981, p.112

3. Moxon-Browne, p.25; Cerny/Lodge, p.112

4. Cerny/Lodge, p.112

5. *Ibid.*, p.113

6. *Ibid.*, p.112

7. Vittorfranco S. Pisano, "Terrorist Ethnic Separatism in France and Italy", Conflict, 8:2,3 (1988), p.89

8. Edward Moxon-Browne, "Terrorism in France", Conflict Studies #144, p.21

9. Maurice Tugwell, "Military and Paramilitary Measures", in David Charters, ed., Democratic Responses to International Terrorism, Ardsley-On-Hudson, NY: Transnational Publishers, 1991, p.330. The CRS is not, however, to be considered as an antiterrorist squad, as is often implied. Its role is crowd control, not direct assaults, intelligence gathering, penetration of groups, or any other function normally seen in antiterrorism. France has other groups which are capable of such tasks.

10. Frank Gregory, "Policing the Democratic State: How Much Force?", Conflict Studies #194, London: ISC (July 1986), p.12

11. Grant Wardlaw, Political Terrorism: Theory, Tactics, and Counter-Measures, Cambridge: Cambridge University Press, 1989, p.97. The *Gendarmerie Nationale*, in turn, falls under the jurisdiction of the military.

12. Christopher Dobson, Ronald Payne, Counterattack: The West's Battle Against the Terrorists, New York: Facts on File, 1982, p.127

13. Cerny, p.105

14. *Ibid.*, p.105. Former Minister of the Interior Raymond Marcellin made this revelation in *Le Figaro* (August 1978).

15. Philip G. Cerny, "France: Non-Terrorism and the Politics of Repressive Tolerance", in Lodge, ed., Terrorism: A Challenge to the State, p.112-3

16. *Ibid.*, p.113

17. Gayle Rivers, The War Against the Terrorists: How to Win It, New York: Stein & Day, 1986, p.229

18. Christopher Dobson, Ronald Payne, Counterattack: The West's Battle Against the Terrorists, New York: Facts on File, 1982, p.123. Only one BAC unit existed by the early 1980s, stationed in Paris and composed of 50 men who train as a unit only once a month.

19. Neil C. Livingstone, The War Against Terrorism, Lexington, MA: D.C. Heath & Co., 1987, p.27

20. M. Asa, "Forms of State Support to Terrorism and the Possibility of Combating Terrorism by Retaliating Against Supporting States", in Ariel Merari, ed., On Terrorism and Combating Terrorism, Frederick, MD: University Publications of America, 1985 (from conference at Jaffee Center for Strategic Studies, Tel Aviv, 1979), p.122

21. Neil C. Livingstone, The War Against Terrorism, p.106

22. *Ibid.*, p.207

23. Vittorfranco S. Pisano, "Terrorist Ethnic Separatism in France and Italy", Conflict, 8:2,3 (1988), p.88. See also, Michel Wieviorka, "French Politics and Strategy on Terrorism", in Barry Rubin, ed., The Politics of Counter-Terrorism: The Ordeal of Democratic States, Washington: Johns Hopkins Foreign Policy Institute, Paul H. Nitze School of Advanced International Studies, 1990, p.63; Michel Wieviorka, "France Faced with Terrorism", Terrorism: An International Journal, 14:3 (July-September 1991), p.158. The IK was led by Philippe Bedart.

24. Vittorfranco S. Pisano, "Terrorist Ethnic Separatism in France and Italy", Conflict, 8:2,3 (1988), p.84. Corsicans would be responsible for over 5000 attacks between 1972 and 1987 on French targets.

25. Rouillan probably joined GARI in 1973, although some authors claim 1974 as a more accurate date. See Michael Dartnell, "France's *Action Directe*: Terrorists in Search of a Revolution", Terrorism and Political Violence, 2:4 (Winter 1990), p.483; and Stephen Segaller, Invisible Armies: Terrorism Into the 1990s, London: Michael Joseph, 1986, p.42. NAPAP and GARI maintained contacts with the RAF and the ETA; see Philip G. Cerny, "France: Non-Terrorism and the Politics of Repressive Tolerance", in Juliet Lodge, ed., Terrorism: A Challenge to the State, p.110

26. Michel Wieviorka, "France Faced with Terrorism", Terrorism: An International Journal, 14:3 (July-September 1991), p.159. Abu Daoud turned up in France in 1977; he was arrested and released shortly thereafter, causing a diplomatic storm for France. See *Ibid.*, p.160. The raid was apparently an operation by Abu Nidal operatives using the name "The Punishment Squad", and was backed by Iraq. See Patrick Seale, Abu Nidal: A Gun for Hire, New York: Random House, 1992, p.91-2. The author relies heavily on PLO sources; the book should thus be read with some degree of caution or skepticism.

27. Christopher Dobson, Ronald Payne, Counterattack: The West's Battle Against the Terrorists, New York: Facts on File, 1982, p.125

28. Neil C. Livingstone, The Cult of Counterterrorism: The "Weird World" of Spooks, Counterterrorists, Adventurers, and the Not Quite Professionals, Lexington: D.C. Heath & Co., 1990, p.311. While this author claims GIGN was formed in 1973, others suggest it was 1974. For example, see Dobson, Payne, Counterattack, p.123. GIGN is based at Maisons-Alfort near Paris and at Mont-de-Marsan in western France.

29. Neil C. Livingstone, The Cult of Counterterrorism, p.312

30. Philip G. Cerny, "France: Non-Terrorism and the Politics of Repressive Tolerance", in Juliet Lodge, ed., Terrorism: A Challenge to the State, Oxford: Martin Robertson, 1981, p.112

31. *Ibid.*, p.112

32. *Ibid.*, p.113

33. Stephen Segaller, Invisible Armies: Terrorism Into the 1990s, London: Michael Joseph, 1986, p.42. Rouillan would be released in 1977.

34. Edward Moxon-Browne, "Terrorism in France", Conflict Studies #144, London: ISC, 1983, p.8. See also, Edward Moxon-Browne, "Terrorism in France", in Juliet Lodge, ed., The Threat of Terrorism, London: Wheatsheaf Books, 1988, p.224

35. Richard Clutterbuck, Terrorism and Guerrilla Warfare, London: Routledge, 1990, p.167

36. *Ibid.*

37. Brian Hayes, "The Effects of Terrorism in Society: An Analysis, with Particular Reference to the United Kingdom and the European Economic Community", Police Studies, vol.2 (Fall 1979), p.7; O.P. St. John, Air Piracy, Airport Security, and International Terrorism: Winning the War Against Hijackers, New York: Quorum Books, 1991, p.159; Michel Wieviorka, "France Faced with Terrorism", Terrorism: An International Journal, 14:3 (July-September 1991), p.160

38. Bruce George, MP, Rapporteur, "Working Group on Terrorism: Final Report", North Atlantic Assembly Papers, Brussels: North Atlantic Assembly (February 1987), p.31. The report does not say if the agency was the DST, the DRG, the DGSE or the SDECE. The French allegedly had a similar deal with the PLO, in which the latter would supply the former with information on competing terrorist groups in exchange for French support on the international stage. It is not known if these arrangements saved lives in France, but it is almost certain that lives were lost in other countries as a result of French lenience.

39. n.a., "Political Violence and Civil Disobedience in Western Europe 1982", Conflict Studies #145, London: ISC, 1983, p.5

40. Fenton Bresler, Interpol, London: Penguin Books, 1992, p.267

41. Stephen Segaller, Invisible Armies: Terrorism into the 1990s, London: Michael Joseph, 1986, p.63

42. J. Bowyer Bell, A Time of Terror: How Democratic Societies Respond to Revolutionary Violence, New York: Basic Books, 1978, p.24-5; Patrick Brogan, The Fighting Never Stopped, New York: Vintage Books, 1990, p.531

43. Patrick Brogan, The Fighting Never Stopped, New York: Vintage Books, 1990, p.531; and Bowyer Bell, p.24-5

44. Patrick Brogan, The Fighting Never Stopped, New York: Vintage Books, 1990, p.531. The author claims that there were three officers involved, while other reports suggest that there were two agents and one informant. See J. Bowyer Bell, A Time of Terror: How Democratic Societies Respond to Revolutionary Violence, New York: Basic Books, 1978, p.24-5. The latter report will be considered accurate for the present purposes.

45. Paul Wilkinson, "The Real-World Problems of the Terrorist Organization and the Problem of Propaganda", in Ariel Merari, ed., On Terrorism and Combating Terrorism, Frederick, Maryland: University Publications of America, 1985, p.122. This book documents the proceedings of a conference held by the Jaffee Center for Strategic Studies, Tel Aviv, 1979.

46. Christopher Dobson, Ronald Payne, Counterattack: The West's Battle Against the Terrorists, New York: Facts On File, 1982, p.127.

47. Christopher Dobson, Ronald Payne, Counterattack: The West's Battle Against the Terrorists, New York: Facts On File, 1982, p.124-5 is the best account of this operation. See also Anthony Kellett, "Contemporary International Terrorism and its Impact on Canada", ORAE Report #R100, Ottawa: Department of National Defence, 1988, p.142: Neil C. Livingstone, The Cult of Counterterrorism: The "Weird World" of Spooks, Counterterrorists, Adventurers, and the Not Quite Professionals, Lexington: D.C. Heath and Co., 1990, p.310. The GIGN was led by Lt. Christian Prouteau.

48. Edward Moxon-Browne, "Terrorism in France", Conflict Studies #144, London: ISC, 1983, p.12. See also Patrick Brogan, The Fighting Never Stopped, p.520; Vittorfranco S. Pisano, "Terrorist Ethnic Separatism in France and Italy", Conflict, 8:2,3 (1988), p.85

49. Vittorfranco S. Pisano, "Terrorist Ethnic Separatism in France and Italy", Conflict, 8:2,3 (1988), p.86

50. O.P. St. John, Air Piracy, Airport Security, and International Terrorism: Winning the War Against Hijackers, New York: Quorum Books, 1991, p.160

51. O.P. St. John, Air Piracy, Airport Security, and International Terrorism: Winning the War Against Hijackers, New York: Quorum Books, 1991, p.160; O.P. St. John, "Counterterrorism Policy-Making: The Case of Aircraft Hijacking, 1968-1988", in David Charters, ed., Democratic Responses to International Terrorism, Ardsley-on-Hudson, New York: Transnational Publishers, 1991, p.96

52. Philip G. Cerny, "France: Non-Terrorism and the Politics of Repressive Tolerance", in Juliet Lodge, ed., Terrorism: A Challenge to the State, Oxford: Martin Robertson, 1981, p.114

53. Christopher Dobson, Ronald Payne, Counterattack: The West's Battle Against the Terrorists, New York: Facts on File, 1982, p.xix; Jennifer Shaw, ed., Ten Years of Terrorism, London: RUSI, 1979, p.33; Paul Wilkinson, ed., British Perspectives on Terrorism, London: George Allen & Unwin, 1981, p.179; J. Bowyer Bell, A Time of Terror, p.158-9.

54. Stephen Segaller, Invisible Armies: Terrorism Into the 1990s, p.42. Rouillan's freedom would be brief.

55. Philip G. Cerny, "France: Non-Terrorism and the Politics of Repressive Tolerance", in Juliet Lodge, ed., Terrorism: A Challenge to the State, Oxford: Martin Robertson, 1981, p.105

56. Edward Moxon-Browne, "Terrorism in France", Conflict Studies #144, London: ISC, 1983, p.10

57. Michel Wieviorka, "French Politics and Strategy on Terrorism", in Barry Rubin, ed., The Politics of Counter-Terrorism: The Ordeal of Democratic States, Washington: Johns Hopkins Foreign Policy Institute, Paul H. Nitze School of Advanced International Studies, (no date), p.72

58. Philip G. Cerny, "France: Non-Terrorism and the Politics of Repressive Tolerance", in J. Lodge, ed., Terrorism: A Challenge to the State, p.111

59. Christopher Dobson, Ronald Payne, Counterattack: The West's Battle Against the Terrorists, p.130

60. The attack occurred on June 26, 1978. See Patrick Brogan, The Fighting Never Stopped, p.519

61. Edward Moxon-Browne, "Terrorism in France", Conflict Studies #144, London: ISC, 1983, p.9

62. *Ibid.*, p.9; Patrick Brogan, The Fighting Never Stopped, p.519. However, those convicted of setting bombs were not sentenced to long terms of imprisonment. The concessions to Brittany mentioned previously were continued.

63. Stephen Segaller, Invisible Armies: Terrorism Into the 1990s, p.42

64. Philip G. Cerny, "France: Non-Terrorism and the Politics of Repressive Tolerance", in Lodge, ed., Terrorism: A Challenge to the State, p.113.

65. Geoffrey Pridham, "Terrorism and the State in West Germany During the 1970s: A Threat to Stability or a Case of Political Over-reaction?", in Lodge, ed., Terrorism: A Challenge to the State, p.48

66. Christopher Dobson, Ronald Payne, Counterattack: The West's Battle Against the Terrorists, p.127

67. *Ibid.*

68. Patrick Seale, Abu Nidal: A Gun for Hire, p.270

69. Neil C. Livingstone, "States in Opposition: The War Against Terrorism", Conflict, 3:2,3 (1981), p.99

70. *Ibid.*, p.133; Jennifer Shaw, ed., Ten Years of Terrorism, London: RUSI, 1979, p.144

71. Paul Wilkinson, ed., British Perspectives on Terrorism, London: George Allen & Unwin, 1981, p.178; Philip G. Cerny, "France: Non-Terrorism and the Politics of Repressive Tolerance", in Lodge, ed., Terrorism: A Challenge to the State, p.105

72. Edward Moxon-Browne, "Terrorism in France", Conflict Studies #144, London: ISC, 1983, p.16

73. Defense Intelligence Agency, Terrorist Group Profiles, Washington: USGPO, 1988, p.19. LARF was headed by Georges Ibrahim Abdallah, also known as Salah al-Masri, or Abdul-Qader Saadi. *Action Directe* sub-groups included *Clodo, Jeune Taupe, Casse-Noix,* and *Moulons Enragés.*

74. Christopher Dobson, Ronald Payne, Counterattack: The West's Battle Against the Terrorists, p.109

75. *Ibid.*, p.125. No shots were fired in the operation.

76. *Ibid.*

77. Michel Wieviorka, "France Faced with Terrorism", Terrorism: An International Journal, 14:3 (July-September 1991), p.157; Michel Wieviorka, "French Politics and Strategy on Terrorism", in Barry Rubin, ed., The Politics of Counter-Terrorism: The Ordeal of Democratic States, p.62. AD committed about 15 attacks in 1980.

78. Edward Moxon-Browne, "Terrorism in France", Conflict Studies #144, London: ISC, 1983, p.25.

79. Bruce Hoffman, "Right-Wing Terrorism in Europe", Conflict, 5:3 (1984), p.195

80. Christopher Dobson, Ronald Payne, The Terrorists: Their Weapons, Leaders and Tactics, New York: Facts on File, 1982, p.171

81. Stephen Segaller, Invisible Armies: Terrorism Into the 1990s, p.156

82. Michael Dartnell, "France's *Action Directe*: Terrorists in Search of a Revolution", Terrorism and Political Violence, 2:4 (Winter 1990), p.459

83. Christopher Dobson, Ronald Payne, Counterattack: The West's Battle Against the Terrorists, p.130

84. *Ibid.*, p.125

85. *Ibid.*

86. Michel Wieviorka, "French Politics and Strategy on Terrorism", in Barry Rubin, ed., The Politics of Counter-Terrorism: The Ordeal of Democratic States, p.100

87. *Ibid.*, p.78. Another explanation for this action may lie elsewhere. Since France had struck deals with a number of terrorist groups it is entirely possible that one of these groups attacked Syria. In either event, the French government would have known of the attack and thus condoned the retaliatory action. See also Michel Wieviorka, "France Faced with Terrorism", Terrorism: An International Journal, 14:3 (July-September 1991), p.165

88. GAL is the French acronym for the Antiterrorist Liberation Group, and FRANCIA stands for the New Action Front Against Independence and Autonomy. It is possible that GAL was constructed of members of the Spanish intelligence community, although there is no proof of this. FRANCIA was largely formed from former French military personnel; the French government denies any involvement with the group. For a discussion of GAL and FRANCIA, see Bruce George, MP, Rapporteur, "Working Group on Terrorism: Final Report", North Atlantic Assembly Papers, Belgium: February 1987, North Atlantic Assembly, p.11; Vittorfranco S. Pisano, "Terrorist Ethnic Separatism in France and Italy", Conflict, 8:2,3 (1988), p.88; Edward Moxon-Browne, "Terrorism in France", Conflict Studies #144, London: ISC, 1983, p.12

89. Michel Wieviorka, "French Politics and Strategy on Terrorism", in Barry Rubin, ed., The Politics of Counter-Terrorism: The Ordeal of Democratic States, p.81-2

90. *Ibid.*, p.81-2; Stephen Segaller, Invisible Armies: Terrorism Into the 1990s, p.182

91. Stephen Segaller, Invisible Armies: Terrorism Into the 1990s, p.184. The government allegedly reached an agreement with the ETA, promising to ignore their activities in exchange for refraining from attacking French interests.

92. O.P. St. John, Air Piracy, Airport Security, and International Terrorism: Winning the War Against Hijackers, p.160-161; O. P. St. John, "Counterterrorism Policy-Making: The Case of Aircraft Hijacking, 1968-1988", in David Charters, ed., Democratic Responses to International Terrorism, p.97-98; Stephen Segaller, Invisible Armies: Terrorism Into the 1990s, p.179; Christopher Dobson, Ronald Payne, Counterattack: The West's Battle Against the Terrorists, p.128; Michel Wieviorka, "French Politics and Strategy on Terrorism", in Barry Rubin, ed., The Politics of Counter-Terrorism: The Ordeal of Democratic States, p.62

93. n.a., "Political Violence and Civil Disobedience in Western Europe 1982", Conflict Studies #145, London: ISC, 1983, p.5

94. Anthony Kellett, Contemporary International Terrorism and its Impact on Canada, Ottawa: ORAE Report #R100 (February 1988), p.53. The reactor sustained minimal damage, but the incident was important for its ability to cause fear, which is an essential component of terrorist activity.

95. Edward Moxon-Browne, "Terrorism in France", Conflict Studies #144, London: ISC, 1983, p.3

96. Edward Moxon-Browne, "Terrorism in France", Conflict Studies #144, London: ISC, 1983, p.19

97. Michel Wieviorka, "French Politics and Strategy on Terrorism", in Barry Rubin, ed., The Politics of Counter-Terrorism: The Ordeal of Democratic States, p.69

98. Stephen Segaller, Invisible Armies: Terrorism into the 1990s, p.185

99. *Ibid.*, p.181

100. Edward Moxon-Browne, "Terrorism in France", Conflict Studies #144, London: ISC, 1983, p.22

101. Stephen Segaller, Invisible Armies: Terrorism into the 1990s, p.70

102. This information was compiled by using the following sources: Stephen Segaller, Invisible Armies: Terrorism into the 1990s, p.49; Michel Wieviorka, "France Faced with Terrorism", Terrorism: An International Journal, 14:3 (July-September 1991), p.168; Ivan Barbot, Jacques Franquet, Ange Mancini, "Combating Terrorism in France: New Bearings", International Criminal Police Review, #410 (January-February 1988), p.12; Edward Moxon-Browne, "Terrorism in France", in Juliet Lodge, ed., The Threat of Terrorism, p.226; Edward Moxon-Browne, "Terrorism in France", Conflict Studies #144, London: ISC, 1983, p.26; Michel Wieviorka, "French Politics and Strategy on Terrorism", in Barry Rubin, ed., The Politics of Counter-Terrorism: The Ordeal of Democratic States, p.85

103. Paul Wilkinson, "State-Sponsored International Terrorism: The Problems of Response", World Today (London), 40:7 (July 1984), p.297

104. Patrick Brogan, The Fighting Never Stopped, p.551-2

105. Michel Wieviorka, "French Politics and Strategy on Terrorism", in Barry Rubin, ed., The Politics of Counter-Terrorism: The Ordeal of Democratic States, p.74

106. *Ibid.*, p.74-5

107. Richard Clutterbuck, Terrorism and Guerrilla Warfare, London: Routledge, 1990, p.217. There may have been more to this decision than merely a request by Spain. The French government may have been concerned about the attacks since it appeared that the GAL might have been a group sponsored by Spanish intelligence in response to previous French inaction regarding ETA activities. The decision to tighten immigration procedures did not, however, rescind the French tradition of asylum.

108. Defense Intelligence Agency, Terrorist Group Profiles, p.16; Robert A. Friedlander, Robert B. Oakley, Paul Wilkinson, Robert H. Kupperman, James Berry Motley, Yonah Alexander, "The War Against Terrorism", Harvard International Review, Vol.VII, No.6 (May-June 1985), p.4. The latter report states that there were 80 French troops killed in the attack.

109. Michel Wieviorka, "French Politics and Strategy on Terrorism", in Barry Rubin, ed., The Politics of Counter-Terrorism: The Ordeal of Democratic States, p.84; Michel Wieviorka, "France Faced with Terrorism", Terrorism: An International Journal, 14:3 (July-September 1991), p.167

110. Stephen Segaller, Invisible Armies: Terrorism into the 1990s, p.180-1

111. Patrick Brogan, The Fighting Never Stopped, p.538

112. Edward Moxon-Browne, "Spain and the ETA: The Bid for Basque Autonomy", Conflict Studies #201, London: ISC (July 1987), p.14; Michel Wieviorka, "France Faced with Terrorism", Terrorism: An International Journal, 14:3 (July-September 1991), p.163; Michel Wieviorka, "French Politics and Strategy on Terrorism", in Barry Rubin, ed., The Politics of Counter-Terrorism: The Ordeal of Democratic States, p.75

113. Patrick Brogan, The Fighting Never Stopped, p.520

114. Michel Wieviorka, "French Politics and Strategy on Terrorism", in Barry Rubin, ed., The Politics of Counter-Terrorism: The Ordeal of Democratic States, p.86

115. Ivan Barbot, Jacques Franquet, Ange Mancini, "Combating Terrorism in France: New Bearings", International Criminal Police Review, #410 (January-February 1988), p.9

116. Michel Wieviorka, "French Politics and Strategy on Terrorism", in Barry Rubin, ed., The Politics of Counter-Terrorism: The Ordeal of Democratic States, p.86

117. Stephen Segaller, Invisible Armies: Terrorism into the 1990s, p.180

118. *Ibid.*

119. Michel Wieviorka, "French Politics and Strategy on Terrorism", in Barry Rubin, ed., The Politics of Counter-Terrorism: The Ordeal of Democratic States, p.62

120. O.P. St. John, Air Piracy, Airport Security, and International Terrorism: Winning the War Against Hijackers, p.161

121. Patrick Brogan, The Fighting Never Stopped, p.524

122. Yonah Alexander, Robert A. Friedlander, Robert H. Kupperman, James Berry Motley, Robert B. Oakley, Paul Wilkinson, "The War Against Terrorism", Harvard International Review, Vol. VII, No. 6 (May/June 1985), p.14

123. Michel Wieviorka, "French Politics and Strategy on Terrorism", in Barry Rubin, ed., The Politics of Counter-Terrorism: The Ordeal of Democratic States, p.70. This is not an especially strange situation, given that a number of states no longer considered the PLO itself to be a terrorist group and the fact that the PLO had renounced terrorism outside Israel.

124. A reported 85% of the French public opposed freedom for Abdallah. See Dominique Moisi, "Terrorists Challenge France", Winnipeg Free Press, September 19, 1986, p.7. Reprinted from The Los Angeles Times.

125. Maurice Tugwell, "Military and Paramilitary Measures", in David Charters, ed., Democratic Responses to International Terrorism, p.330

126. Michael Goldsmith, "Long soft on terrorists, France reaping whirlwind", Winnipeg Free Press, Sept. 20, 1986, p.4 (AP)

127. Ivan Barbot, Jacques Franquet, Ange Mancini, "Combating Terrorism in France: New Bearings", International Criminal Police Review, #410 (January- February 1988), p.9

128. Michel Wieviorka, "French Politics and Strategy on Terrorism", in Barry Rubin, ed., The Politics of Counter-Terrorism: The Ordeal of Democratic States, p.98-9. At the time, Iran was largely responsible for terrorist activities throughout Western Europe, and to a greater dgree in France than anywhere else.

129. Luc Chauvin,"French Diplomacy and the Hostage Crisis", in Barry Rubin, ed., The Politics of Counter-Terrorism: The Ordeal of Democratic States, p.99. When part of the loan was paid back in November, three more hostages were released. Rescue was impossible under the circumstances.

130. Patrick Brogan, The Fighting Never Stopped, p.552-3

131. Dennis Pluchinsky, "Middle Eastern Terrorist Activity in Western Europe: A Diagnosis and Prognosis", Conflict Quarterly, Vol.6 (Summer 1986), p.13

132. L. Paul Bremer III, "Counterterrorism Strategies and Programs", Terrorism, 10:4 (1987), p.338

133. Michel Wieviorka, "French Politics and Strategy on Terrorism", in Barry Rubin, ed., The Politics of Counter-Terrorism: The Ordeal of Democratic States, p.83

134. *Ibid.*; Michel Wieviorka, "France Faced with Terrorism", Terrorism: An International Journal, 14:3 (July-September 1991), p.167

135. Luc Chauvin, "French Diplomacy and the Hostage Crisis", in Barry Rubin, ed., The Politics of Counter-Terrorism: The Ordeal of Democratic States, p.101

136. "Lebanese group claims bombing", Winnipeg Free Press, September 19, 1986, p.19

137. Robert Oakley, "International Terrorism", Foreign Affairs, 65:3 (1987), p.622. The author credits diplomacy without considering other factors. It is almost certain that the Syrian government alone was able to stop LARF. Additionally, at least one author suggests that LARF was a cover name for the terrorist activities of Syrian military intelligence. See Yossef Bodansky, Target, the West: Terrorism in the World Today, New York: S.P.I. Books, 1993, p.239.

138. Yossef Bodansky, Target, the West: Terrorism in the World Today, New York: S.P.I. Books, 1993, p.254.

139. Richard Clutterbuck, Terrorism, Drugs and Crime in Europe after 1992, London: Routledge, 1990, p.65. *Pentiti*, as it is known in Italy, is a common feature in most European states, providing a valuable source of information about terrorist groups and members by using captured criminals; it is also a way to persuade reluctant terrorists to surrender.

140. Bruce George, MP, Rapporteur, "Working Group on Terrorism: Final Report", North Atlantic Assembly Papers, Brussels: February 1987, p.38; Edward Moxon-Browne, "Terrorism in France", in Juliet Lodge, ed., The Threat of Terrorism, p.226; Steven M. Berry, "Combatting Terrorism: The Legislative Approach", TVI Report, 9:3 (1990), p.17-19; Richard Clutterbuck, Terrorism, Drugs and Crime in Europe After 1992, p.64-66

141. Richard Clutterbuck, Terrorism, Drugs and Crime in Europe After 1992, p.65

142. Patrick Brogan, The Fighting Never Stopped, p.510

143. Michel Wieviorka, "French Politics and Strategy on Terrorism", in Barry Rubin, ed., The Politics of Counter-Terrorism: The Ordeal of Democratic States, p.87

144. *Ibid.*, p.87

145. Patrick Brogan, The Fighting Never Stopped, p.510; Hans Josef Horchem, "The Decline of the Red Army Faction", Terrorism and Political Violence, 3:2 (Summer 1991), p.68; Michel Wieviorka, "French Politics and Strategy on Terrorism", in Barry Rubin, ed., The Politics of Counter-Terrorism: The Ordeal of Democratic States, p.62. Maxime Frerot, the AD bomb expert and leader, would be arrested on November 27, 1987 in Lyons.

146. Patrick Brogan, The Fighting Never Stopped, p.510

147. Richard Clutterbuck, Terrorism, Drugs, and Crime in Europe After 1992, p.66. Abbas was the brother of Mohammed, who had been arrested by the Germans for his part in the 1985 TWA 847 hijacking. It appears that Mohammed gave information to the BfV regarding his brother and the Germans supplied it to the DST.

148. Ivan Barbot, Jacques Franquet, Ange Mancini, "Combating Terrorism in France: New Bearings", International Criminal Police Review, #410 (January-February 1988), p.9. Franquet was posted as head of UCLAT in 1987.

149. *Ibid.*, p.12

150. *Ibid.*

151. *Ibid.*, p.10. Britain and Germany ratified the convention in 1978.

152. Richard Clutterbuck, Terrorism, Drugs and Crime in Europe After 1992, p.66

153. Geoffrey M. Levitt, Democracies Against Terror: The Western Response to State-Supported Terrorism, New York: Praeger (Washington Papers #134, Center for Strategic and International Studies), 1988, p.47

154. Michel Wieviorka, "French Politics and Strategy on Terrorism", in Barry Rubin, ed., The Politics of Counter-Terrorism: The Ordeal of Democratic States, p.76; Vittorfranco S. Pisano, "Terrorist Ethnic Separatism in France and Italy", Conflict, 8:2,3 (1988), p.85

155. Paul Wilkinson, "Terrorist Targets and Tactics: New Risks to World Order", Conflict Studies #236, London: RISCT (December 1990), p.18

156. Ivan Barbot, Jacques Franquet, Ange Mancini, "Combatting Terrorism in France: New Bearings", International Criminal Police Review, #410 (January-February 1988), p.14

157. *Ibid.*

158. Patrick Brogan, The Fighting Never Stopped, p.540. Gordji was the chief resident SAVAMA agent for Western Europe. See Yossef Bodansky, Target, the West: Terrorism in the World Today, New York: S.P.I. Books, 1993, p.233.

159. Michel Wieviorka, "French Politics and Strategy on Terrorism", in Barry Rubin, ed., The Politics of Counter-Terrorism: The Ordeal of Democratic States, p.84

160. Luc Chauvin, "French Diplomacy and the Hostage Crisis", in Barry Rubin, ed., The Politics of Counter-Terrorism: The Ordeal of Democratic States, p.101

161. Michel Wieviorka, "French Politics and Strategy on Terrorism", in Barry Rubin, ed., The Politics of Counter-Terrorism: The Ordeal of Democratic States, p.103

162. O.P. St. John, "Counterterrorism Policy-Making: The Case of Aircraft Hijacking, 1968-1988", in David Charters, ed., Democratic Responses to International Terrorism, p.99

163. Richard Clutterbuck, Terrorism, Drugs and Crime in Europe After 1992, p.63

164. Patrick Brogan, The Fighting Never Stopped, p.511

165. Michel Wieviorka, "French Politics and Strategy on Terrorism", in Barry Rubin, ed., The Politics of Counter-Terrorism: The Ordeal of Democratic States, p.64; Vittorfranco S. Pisano, "Terrorist Ethnic Separatism in France and Italy", Conflict, 8:2,3 (1988), p.88. The ETA had a falling-out with IK in the early 1980s. At the time the French government did not actively pursue ETA members if they avoided French targets and informed on IK members. It is quite possible that the ETA gave information about IK while the French government received information from its own operations and Spanish intelligence regarding the ETA. In this fashion, an intelligence operation lasting some seven years culminated in the apparent destruction of both terrorist groups.

166. Richard Clutterbuck, Terrorism, Drugs and Crime in Europe after 1992, p.22

167. Patrick Seale, Abu Nidal: A Gun for Hire, p.267

168. *Ibid.*, p.270. The representative was Emile Saab in 1990. The intelligence chief was Ali al-Farra (Dr. Kamal).

169. Steven M. Berry, "Combatting Terrorism: The Legislative Approach", TVI Report, 9:3 (1990), p.17

170. Howard R. Simpson, "European Terrorism", TVI Report, 10:1 (1991), p.11

171. "Former Iranian PM, Aide Slain in Paris Suburb", Winnipeg Free Press, August 9, 1991, p.48 (Reuters-AFP)

172. "Visas Nearly Trip Up Suspects in Slaying of Former Iranian PM", Winnipeg Free Press, August 14, 1991, p.16 (AP); "Suspect in Slaying Arrested", Winnipeg Free Press, August 22, 1991, p.48 (Reuters). Both men were captured and were awaiting trial in France as of early 1994.

173. "Basque Leader Captured in France", Winnipeg Free Press, March 30, 1992, p.A3. The arrests dealt a strong blow against the group, decimating their operational effectiveness for about a year. Garmendia was sentenced to ten years' imprisonment by a French court on June 18, 1993. The ETA responded three days later by setting two bombs in Madrid, killing seven and injuring 25. See "Madrid blasts kill seven", Winnipeg Free Press, June 22, 1993, p.A4.

174. "Advisers Axed in Habash Furore", Winnipeg Free Press, January 31, 1992, p.E68 (Reuters-AP)

175. "Censure Motion Filed", Winnipeg Free Press, February 8, 1992, n.p.

176. "Advisers axed in Habash furore", Winnipeg Free Press, January 31, 1992, p.E68. Another may have been an Interior Ministry aide.

177. For further information on the Habash affair, see "Guerrilla leader leaving France in political storm", Winnipeg Free Press, February 1, 1992, p.A10 (Reuters); "As heads roll in France, PLO leader returns to Tunis", Winnipeg Free Press, February 2, 1992, n.p. (AP-Reuters-CP). For greater depth, see Helen Davis, "Habash affair leaves French red-faced", Winnipeg Free Press, February 6, 1992, p.A7 (op.ed.); and Christopher Dickey, "Treating a Terrorist: A Scandal Rocks France", Newsweek, February 10, 1992, p.37

178. "France assailed for deporting Iranians", Winnipeg Free Press, January 4, 1994, p.A4

179. "Notorious terrorist 'the Jackal' caged in France", Winnipeg Free Press, August 16, 1994, p.A1; Helen Davis, "Politics trapped Carlos", Winnipeg Free Press, August 18, 1994, p.A7

180. Winnipeg Free Press, August 11, 1994, p.A13

181. "Fugitive leader of violent Turkish underground leftist group caught in France", Winnipeg Free Press, September 12, 1994, p.A8 (AP)

182. "Police Rescue Toddlers, Kill 'HB'", Winnipeg Free Press, May 16, 1993, p.A1, A4; Thomas Sancton, "The Teacher and the Terrorist", Time, May 24, 1993, p.22-23

Abbreviations: France

PMO	Prime Minister's Office
CNS	National Security Council
CILAT	Interministerial Liaison Committee for Antiterrorism
MSPS	Ministry of State for Public Security
SDECE	Foreign Intelligence Service
DRG	General Security Department
DST	Department for Surveillance of the Territory
GT	Technical Group
CI	Counter-Interference
CE	Counter-Espionage
ME	Middle East Department
CT	Counterterrorism Department
C-LA	Cuba-Latin America Department
PAF	Air & Frontier Police
PU	Urban Police
SCLAT	Central Service for the War Against Terrorism
CORTWE	Cent. Office, Repression of Traffic in Weapons & Explosives
CID	Criminal Investigations Division
BAC	Antiterrorist Brigades
F.LEG.	Foreign Legion
PARAS	Parachute Regiment
GEND. NAT'L	National Police
UCLAT	Coordination Unit for the War Against Terrorism
GIGN	National Police Intervention Unit
RAID	(Unit for) Research, Assistance, Intervention, Dissuasion
GM	Mobile Guard

Figure 3.1: Counterterrorism in France, 1994

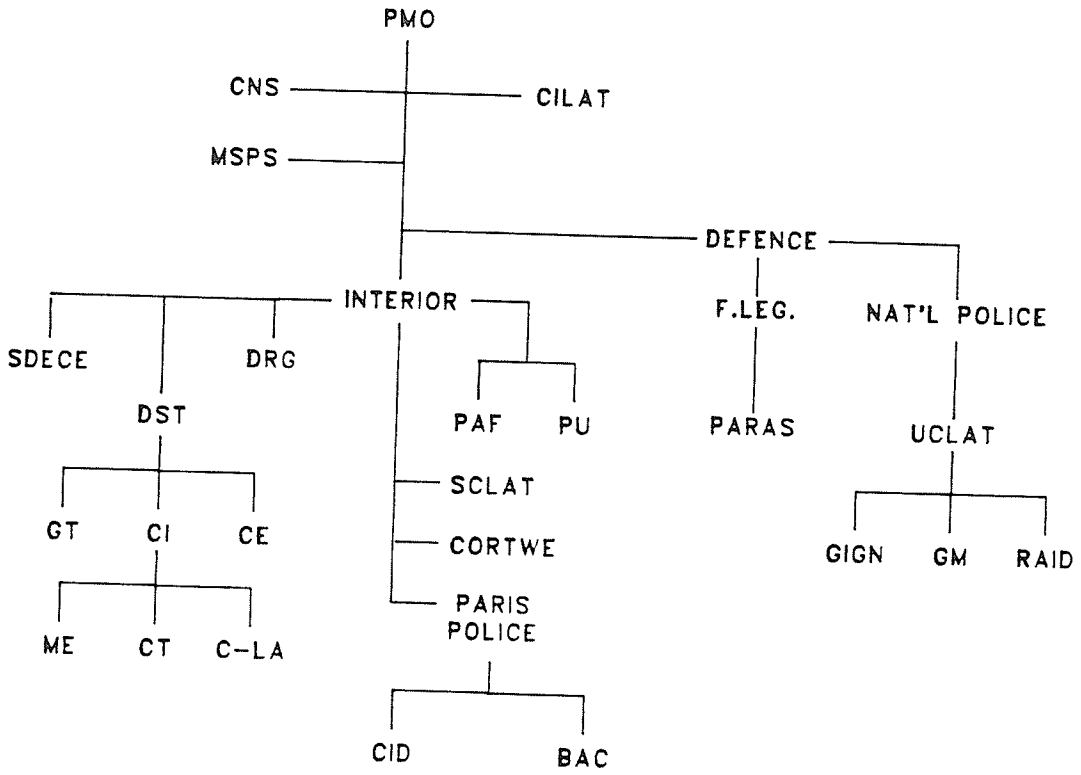

Comparisons and Conclusions

In the study of terrorism and counterterrorism, it is apparent that Great Britain, Germany and France have all faced substantial and sustained threats to their security and to the lives of their citizens. The threat changes constantly, since violent groups choose to change tactics and targets in order to escape apprehension and to maintain the uncertainty and fear that terrorism is designed to create. The threat has increased substantially to these three states in the last quarter century despite the best efforts of governments to create and maintain effective countermeasures. Since terrorism is a weapon used by individuals, groups, and states as an expression of hatred and revenge, and since increases in terrorism reflect the perception that terrorism is an 'effective' mode of political communication, more terrorist groups exist now than at any other time in history.

Since 1968, Great Britain, Germany and France have attempted to respond to the evolving threat by various means, most of which have been publicly documented. Nonetheless, these states have faced obstacles to their counterterrorism plans. Problems related to the definition and assessment of the threat, the values of liberal democracy, incrementalism, and organizational and bureaucratic politics have all played roles in constraining state action, as was evident in the preceding study of the three countries. More importantly, these case studies reveal clearly that some of these factors have been more prominent than others in each case. Thus, measures and styles of each of these states under analysis leads back to the fundamental hindrances placed on liberal democracies when fighting terrorism.

Differences

In 1968, all three states found themselves at the beginning of the modern age of terrorism, which was reflected in the shared policy of benign neglect. When the threat increased, the UK was the first to respond, followed by Germany and France. Without a doubt, the speed of reaction was directly related to the scale of the threat. Northern Ireland represented a situation close to the point of civil war and the conflict spread to mainland Great Britain within a few short years, adding to the threat posed by a variety of foreign sources. While Germany and France did not face as great a threat, both were clearly in a situation of sustained and substantial assault by the early 1970s, yet the time involved between the beginning of the threat and the maturation of policies and response mechanisms varied greatly. Great Britain had defined the threat in a matter of about five years; Germany ten; France almost twenty. While the time lag between Great Britain and Germany can be partially attributed to the scale of the threat, the same cannot be said for the lag between Germany and France; indeed, the threat in the latter two states was quite similar. It is reasonable to argue that Germany itself was rather slow to respond, and France was even worse.

The most fruitful method for examining the differences in policies and procedures between the three states is to use France as the focal point and compare its countermeasures with those of Germany and the UK. First, in 1968 the intelligence services of France, particularly the DRG, gave the government a clear warning that terrorism was emerging as a threat, while German and British intelligence were not utilized for several years. While this did not translate into immediate and solid

countermeasures by the French government, it indicated a substantial and crucial difference between national styles, since intelligence has been and is the most important feature in the overall process of fighting terrorism. The pattern of not utilizing intelligence remained in place in Germany and Great Britain until the mid-1970s, but has changed substantially since then.

Second, while France displayed an underlying uncertainty over the role to be played by its police forces, Great Britain and Germany both considered the police to be the primary response mechanism. Third, the establishment of a lead agency demonstrated policy confusion. The French Foreign Ministry retained elevated status until 1986, whereas Great Britain and Germany were inclined all along toward the Home Office and the Interior Ministry, respectively. Fourth, the French government was willing over the years to strike deals with terrorist groups, far beyond when Great Britain and Germany had dispensed with the option of any discussions with terrorists. Fifth, structural modifications such as the creation of specialized antiterrorist units were not necessarily used in France, while the creation of similar units in Great Britain and Germany tended to signal policy changes and a greater willingness to resist appeasement. Sixth, the French government under Mitterrand curiously dismantled some important features of its counterterrorism structure in 1981, such as the elimination of capital punishment and the State Security Court. These measures stood in stark contrast with the activities taking place in Great Britain and Germany at the time, although France was forced to rethink these changes within a year.

Seventh, France has opted for retaliatory measures against terrorists based in foreign countries at least twice and probably much more often

than that; these have included a bombing in Damascus and an air strike in the Baalbek Valley of Lebanon against Hezbollah. Eighth, the French Foreign Ministry has warned terrorists of impending arrests or reprisals at least twice, including the Baalbek raid and regarding the Gordji affair in Paris. These actions contributed to the definite impression that organizational and bureaucratic interests took precedence over the intended policies of the French government, and ran completely opposite to the procedures used by Great Britain and Germany. Ninth, in contrast to the countermeasures instituted by the British and Germans throughout the 1970s, France did little to change policies and structures until the latter half of the 1980s, reflecting a substantial divergence between the three countries in fighting terrorism. Tenth, and finally, France showed significant weakness in overall policy until the latter half of the 1980s. While policy is definitely hard line at the moment, France remains the weak sister of the three, owing to the possibility of changes in political will. Great Britain and Germany established tough policies earlier than France and have generally held their ground. In summary, while there have been important differences between the three countries in policies, that era appears over.

Reasons for Differences

Although it is true that all three states in this study have been limited in the search for countermeasures by the four theoretical constraints outlined in the paper, it is important to suggest that there are reasons which can help explain why differences have occurred between the three states in this study. The proper identification and definition of the

threat, the values of liberal democracy, incrementalism, and organizational and bureaucratic politics have combined to hinder state action in Great Britain, Germany and France. If all factors had equal importance, one would expect identical timing and structures for the three countries. However, the differences between the three countries requires explanation using the empirical records of the three and expressed in theoretical terms.

The records of Great Britain, Germany and France suggest that, while all experienced the same hindrances, one of those limiting factors may have had a greater influence in the establishment of policy. Considerations taken from the experiences of the three countries in this study do suggest that there have been divergences in the time required to establish effective counterterrorism policies and units. Further examination will expose why this occurred.

In the case of Great Britain, the threat was substantial, yet it took at least five years to implement solid countermeasures and more time than that to solidify policy. Although the UK was limited in responses by respect for democratic values, the most stunning feature of the British response has been the sheer number of incremental changes to organizations, laws and procedures, particularly with reference to the proliferation of small sub-units tasked with some specific role in the overall approach to counterterrorism. These changes occurred when it became apparent that the terrorists changed tactics and targets, or the threat, over a period of time. Still, decision-makers in the UK chose to implement security measures only after that threat became blatant. Since these shifts occurred over a period of time, it is reasonable to suggest

that incrementalism has been the greatest hindrance to counterterrorism in Great Britain. If the latter had made more substantive changes to the security apparatus in a more sweeping fashion and over a shorter period of time, it is likely that lives would have been saved and terrorist groups may have been dismantled sooner.

The German case is less clear, although incrementalism played a small role. The threat was significant and sustained, but sweeping changes in security policy occurred only after major terrorist incidents. Although there is some evidence to suggest that the Germans were somewhat hindered by organizational politics as a result of the nature of the decentralized state, which translated into information blockages to the federal level, this was probably not the most important hindrance to federal action. Similarly, incrementalism played a smaller role than in Great Britain, as the empirical record has demonstrated that Germany acted swiftly and forcefully, but only after such shocking incidents as the Munich massacre of 1972 and particularly the Schleyer affair of 1977. Hence, the strongest limiting factor to German decision-makers has probably been the values of liberal democracy.

Germany has been very reluctant to implement drastic security measures, and this is most likely due to its past. Terrorists consistently reminded senior politicians that the republic was corrupt and 'fascist' in nature, owing to the fact that many in positions of political and economic power were former Nazis themselves. Decision-makers became constrained by fears that overly stringent measures to combat terrorism would create images of an authoritarian state and the legacy of the Nazi experience. Owing to this national guilt complex, German authorities sincerely wished

to avoid playing into the terrorists' hands by becoming stricter with violent youths. That attitude changed very quickly when terrorist activities became more brutal and shocking, and when ordinary Germans were in favour of stronger action.

France was also in a period of sustained terrorist attack, yet actions there differed greatly from Great Britain and Germany. Unlike Great Britain, changes in French security policy were less incremental in nature. Like Germany, changes occurred only after some degree of enhanced shock, but the limiting factor was not rooted in a dark past. Rather, France stands out from Great Britain and Germany for the problems experienced that are directly attributable to organizational and bureaucratic politics. First, it is worthy to note that the Foreign Ministry retained much of the power in decision-making for the greater part of this period of study, ceding that authority after the bomb waves of 1986. Second, squabbles between intelligence agencies such as the DRG and the DST seemed commonplace. Third, the Foreign Ministry curiously interfered with the Interior Ministry, Defence, the Gendarmerie, the intelligence agencies, the Justice Ministry, and the Public Prosecutor on several occasions. This strongly suggests that an effective and consistent program of counterterrorism was delayed due to the fact that the Foreign Ministry had a different agenda than other branches of the French government. While this problem was apparently resolved with the transfer of lead agency to the Interior Ministry, the Foreign Ministry still interferes with normal security duties on certain occasions, particularly when the terrorists happen to be from other countries. Although this could be resolved by issuing stricter guidelines to bureaucrats in the Foreign Ministry, suffice

to say that this has been the greatest hindrance to French counterterrorism in the past.

Similarities

Although there are differences in the importance of hindering factors between the Great Britain, Germany and France, there are a number of areas in which the empirical record has demonstrated remarkable similarities in style and substance between the three countries. The definition and identification of the threat was problematic for all three, even though it was reasonably obvious that they were all under sustained attack from internal and external sources from a very early stage. Intelligence services were either ignored or not used, thus creating enhanced opportunities for terrorists to become better established, trained, and armed in the interim; and it is important to note that terrorist groups have been consistently underestimated, which has contributed to the longevity of some, the expansion of others, and has led to consistent underreaction on the part of governments. The police were expected to deal with the threat from the beginning, reflecting a genuine reluctance on the part of each government to alter any measure or structure in a manner that would or could constitute a threat to the values of liberal democracy. That attitude remained evident throughout the development of counterterrorism in all three states. Furthermore, virtually all changes in structures, procedures, and laws have been incremental in nature.

There are a number of countermeasures shared by Great Britain, Germany and France, although the implementation of these took place at different times. No single measure or combination of measures has

eliminated terrorism, but violence has certainly been restricted because of these efforts. Various groups have been banned; lodging cards are required for permanent and temporary shelter; special forces have been created and used, and their role is constantly increasing; immigration controls have increased dramatically; periods of detention are allowed; juryless courts have been established; police powers have increased substantially; the rights of accused terrorists have been reduced; intelligence is now a very high priority and the budgets for such agencies have increased dramatically; special categories of laws exist specifically for terrorist crimes and the penalties for offences have increased; command and control structures have been created to ensure the efficient flow of information and orders; Ministries of the Interior (Home Office) have evolved as the lead agencies, and political control of the counterterrorism machinery is maintained at the highest levels of government. Moreover, the creation of specialized units has changed the appearance of certain organizations, to the point where police units have become militarized, and military and paramilitary organizations frequently act as quasi-police units rather than in their traditional roles. These organizational and incremental changes, particularly the proliferation of specialized units, have resulted in decentralized structures when centralization would be more efficient for the flow of information and control. While this problem has yet to be resolved, the most important point to make is that all three states have evolved legally, structurally, and in terms of policy to the point that they closely resemble each other. The evolutionary process that led to this can be explained in theoretical terms.

Why Are There Similarities?

The empirical record has demonstrated that there are a number of surprising similarities in counterterrorism that are visible in the three countries analyzed. All three countries have faced similar threats, although the British were first to respond, largely owing to the sheer scale of violence. Other than this factor, these states chose to react to terrorism for the same reasons and with the same measures, with the only significant differentiating factor being the lapse of time between the onset of the threat and the maturation of policies. This strongly suggests that all three states experienced and had to overcome similar or identical hindrances before terrorism could be effectively fought.

There are four commonly shared theoretical points that have combined to restrict the activities of states in the struggle against terrorism, including defining the threat, the values of liberal democracy, incrementalism, and organizational and bureaucratic politics. First, the definition, identification, and assessment of the threat has been problematic. There has been a tendency on the part of governments to ignore terrorism as a new threat to security, which is largely a result of poor or no information. The definition of terrorism itself has created uncertainty for the governments and the organizations concerned, since an accurate definition contributes to an ability to target specific threats using appropriate reactive and preventive measures. Accuracy in this area can determine who should do the job, what units are required or what new units may be needed, will they be able to help and what costs the creation of these units and sub-units might have to the treasury and to liberal democracy itself. Furthermore, without an accurate definition and

assessment of the threat, there has been consistent underestimation of terrorist groups and the measures needed to dismantle them. Since accurate definitions of the threat are the result of good intelligence, and since there has been what appears to be an institutional bias against intelligence agencies and terrorism itself, the threat has been allowed to escalate. Intelligence agencies are now at the forefront, so this problem may be on the decline. Finally, uncertainty of the threat is directly or indirectly related to other theoretical points.

Second, the people responsible for making decisions at all levels of government are sworn to defend the values of liberal democracy, including the rule of law, individual rights, and basic freedoms. Any decision regarding changes in laws or structures must account for the possible impact that these changes can have on society. Societal values must be maintained, the rule of law must be paramount, and overreaction must be avoided to protect the democracy. Terrorists, by definition, seek to destroy what must be defended. Governments are hindered in their reactions to violent political activities, even though harsh actions could certainly disrupt or destroy terrorist groups. In short, governments must not become overly repressive, but societies must accept reduced freedoms in exchange for increased security. To date, governments have tended to err on the side of caution.

Third, almost all decisions made by governments in the area of counterterrorism are incremental in nature, indicating a process of trial and error based on the desire to maintain the essential character of liberal democracy, and because of the amorphous nature of the threat. Terrorists change the threat as they see fit, so new decisions, policies and units must

be created to respond effectively to such changes. Each small change made by governments has not constituted a change in grand policy, but the sum of these shifts over time has resulted in dramatic developments in policy in all three states studied. The goal of all governments is to make terrorism a costly political activity by increasing the chances that terrorists will be captured, imprisoned, or killed. Each small decision made by governments, as opposed to sweeping changes, demonstrates the commitment of governments to democratic values while showing the hindrances placed on decision-makers.

The fourth hindrance to counterterrorism involves organizational and bureaucratic politics. Uncertainty regarding the threat translates to a lack of clarity in decisions and directions passed to organizations, and incrementalism is almost always the result of such confusion. The most obvious demonstration of this problem can be observed in the proliferation of new sub-units, each of which is tasked to defend against a certain and specific terrorist threat as defined by the government. Along with this tendency another problem is created, namely blockages of information and occasional turf wars between organizations and sub-units, which may also be a result of bureaucratic jockeying. While there is very little evidence pointing at bureaucratic politics as a specific hindrance to counterterrorism, organizational politics certainly plays a role. The decentralized structure of a government's counterterrorism plan in turn hinders effective action because of the inefficiencies posed by secretive and small organizations. If the upward flow of information is disrupted or blocked in any way, governments may be unable to assess the threat accurately, leading to more incremental decisions and greater chances for

intelligence failures.

In summary, governments have been slow to respond to terrorism because of uncertainty regarding the specific threat. States have chosen the safest path to compensate for inaccuracy, which has been to underestimate the challenge to the state. Furthermore, the maintenance of the rule of law and certain core values of liberal democracies feed into the considerations faced by governments when making decisions. The result of these inputs is almost always an incremental change in policy, indicating a lack of coherent strategy and a preference for trial and error. Since the directives issued by governments under such conditions will tend to be unclear, smaller specialized units will be the beneficiaries of decisions, because small changes imply a reduced possibility for large mistakes. Such decentralization inhibits the proper flow of information, which results in a repetition of the decision-making process, thus completing the circle. While it is true that the most significant hindering factor has been different in the three states in this study, there remains a remarkable degree of similarity. This can be attributed to the fact that the hindrances themselves are the same for all three countries. Great Britain, Germany and France have all faced these challenges and hindrances in the past, and it will be interesting to observe their activities in the future.

Select Bibliography

Primary Sources

Government of Great Britain. Commission of Privy Councillors to Consider the Detention and Interrogation of Terrorists. London: Queen's Printer, n.d.

Government of Great Britain. Lord Diplock. Report of the Commission to Consider Legal Procedures to Deal with Terrorist Activities in Northern Ireland. London: HMSO, 1972 (Cmnd. 5185).

United States Government. Patterns of International Terrorism. National Foreign Assessment Center. Washington, D.C., 1980.

United States Government. Terrorist Group Profiles. Defense Intelligence Agency. March 1988.

United States Government. Report on Domestic and International Terrorism. Subcommittee on Civil and Constitutional Rights of the Committee of the Judiciary. 97th Congress, 1st Session, Washington: April 1981.

United States Government. West Germany's Political Response to Terrorism. Hearing Before the Subcommittee on Criminal Laws and Procedures of the Committee on the Judiciary. United States Senate, 95th Congress, 2nd Session. April 26, 1978.

Council of Europe. European Convention on the Suppression of Terrorism. 1977.

Council of Europe. European Commission of Human Rights. Ireland Against the United Kingdom of Great Britain and Northern Ireland. 5310/71; Report of the Commission, Strasbourg: 25 January 1976.

Government of Canada. Department of National Defence. Terrorism In Canada. ORAE Report #R100, 1989.

North Atlantic Assembly. Working Group on Terrorism: Final Report. North Atlantic Assembly Papers. Brussels: February 1987. Bruce George, Rapporteur.

Books

Adams, James. Secret Armies. London: Pan Books, 1989.

Alexander, Yonah, and Alan O'Day, eds. Terrorism in Ireland. London: Croom Helm, 1984.

_____, and Kenneth A. Myers, eds. Terrorism in Europe. New York: St. Martin's Press, 1982.

Aust, Stefan. The Baader-Meinhof Group. London: The Bodley Head, 1987; tr. Anthea Bell.

Bell, J. Bowyer. A Time of Terror: How Democratic Societies Respond to Revolutionary Violence. New York: Basic Books, 1978.

Bodansky, Yossef. Target, The West: Terrorism in the World Today. New York: S.P.I. Books, 1993.

Bresler, Fenton. Interpol. London: Penguin Books, 1992.

Brogan, Patrick. The Fighting Never Stopped. New York: Vintage Books, 1990.

Burton, Anthony M. Urban Terrorism: Theory, Practice & Response. New York: The Free Press, 1975.

Charters, David A., ed. Democratic Responses to International Terrorism. New York: Transnational Publishers, 1991.

Clutterbuck, Richard. Terrorism and Guerrilla Warfare: Forecasts and Remedies. London: Routledge, 1990.

_____. Terrorism, Drugs and Crime in Europe after 1992. London: Routledge, 1992.

Cobban, Helena. The Palestinian Liberation Organisation: People, Power and Politics. Cambridge: Cambridge University Press, 1984, 1988.

Dobson, Christopher and Ronald Payne. Counterattack: The West's Battle Against the Terrorists. New York: Facts on File, 1982.

_____. The Terrorists: Their Weapons, Leaders and Tactics. New York: Facts on File, 1982 (revised).

Eckstein, Harry, ed. Internal War: Problems and Approaches. New York: The Free Press, 1964.

Emerson, Steven, and Brian Duffy. The Fall of Pan Am 103. London: Futura Publications, 1990.

Finn, John E. Constitutions in Crisis: Political Violence and the Rule of Law. New York: Oxford University Press, 1991.

Freedman, Lawrence Zelic and Yonah Alexander, eds. Perspectives on Terrorism. Wilmington, Delaware: Scholarly Resources, Inc., 1983.

Gal-Or, Naomi, ed. Tolerating Terrorism in the West: An International Survey. London: Routledge, 1991.

Godson, Roy, ed. Intelligence Requirements for the 1990s: Collection, Analysis, Counterintelligence, and Covert Action. Lexington: D.C. Heath & Co., 1989.

Hacker, Frederick J., M.D. Crusaders, Criminals, Crazies: Terrorism in Our Time. New York: W.W. Norton & Co., 1976.

Halperin, Morton. Bureaucratic Politics and Foreign Policy. Washington: The Brookings Institution, 1974.

Hayes, Michael T. Incrementalism and Public Policy. New York: Longman Publishing Group, 1992.

Heffron, Florence. Organization Theory and Public Organizations. Englewood Cliffs, NJ: Prentice Hall, 1989.

Hewitt, Christopher. The Effectiveness of Anti-Terrorist Policies. New York: University Press of America, 1984.

Howard, Lawrence, ed. Terrorism: Roots, Impact, Responses. New York: Praeger Publishers, 1992.

Katzenstein, Peter J. West Germany's Internal Security Policy: State and Violence in the 1970s and 1980s. Ithaca: Cornell University Occasional Paper #28, Center for International Studies, 1990.

Kegley, Charles W. Jr., ed. International Terrorism: Characteristics, Causes, Controls. New York: St. Martin's Press, 1990.

Kinsella, Warren. Unholy Alliances. Toronto: Lester Publishing, 1992.

Klare, Michael T. and Peter Kornbluh, eds. Low Intensity Warfare: Counterinsurgency, Proinsurgency, and Antiterrorism in the Eighties. New York: Pantheon Books, 1988.

Kozak, David C., and James M. Keagle, eds. Bureaucratic Politics and National Security: Theory and Practice. Boulder, CO: Lynne Rienner Publishers, 1988.

Levitt. Geoffrey M. Democracies Against Terror: The Western Response to State-Supported Terrorism. New York: Praeger, 1988.

Livingstone, Neil C. The Cult of Counterterrorism: The "Weird World" of Spooks, Counterterrorists, Adventurers, and the Not Quite Professionals. Lexington: D.C. Heath & Co., 1990.

_____., and David Halevy. Inside the PLO. New York: Quill/William Morrow, 1990.

_____. The War Against Terrorism. Lexington: D.C. Heath & Co., 1987.

_____, and Terrell E. Arnold, eds. Fighting Back: Winning the War Against Terrorism. Lexington, Mass.: D.C. Heath & Co., 1986.

Lodge, Juliet, ed. Terrorism: A Challenge to the State. Oxford: Martin Robertson, 1981.

_____., ed. The Threat of Terrorism. London: Wheatsheaf Books Ltd., 1988.

March, James G., and Johan P. Olsen. Rediscovering Institutions: The Organizational Basis of Politics. New York: The Free Press, 1989.

Marks, John and Igor Beliaev, eds. Common Ground on Terrorism: Soviet-American Cooperation Against the Politics of Terror. New York: W.W. Norton, 1991.

Merari, Ariel. ed. On Terrorism and Combating Terrorism. Frederick, Maryland: University Publications of America, 1985.

Netanyahu, Benjamin, ed. International Terrorism: Challenge and Response. Jerusalem: The Jonathan Institute, 1981.

Peters, B. Guy. The Politics of Bureaucracy. New York: Longman Group, 1989 (3rd ed.).

Reich, Walter, ed. Origins of Terrorism: Psychologies, Ideologies, Theologies, States of Mind. Cambridge: Cambridge University Press, 1990.

Reisman, W. Michael, and James E. Baker. Regulating Covert Action. New Haven, CN: Yale University Press, 1992.

Rivers, Gayle. The War Against the Terrorists: How to Win It. New York: Stein & Day, 1986.

Rubin, Barry, ed. The Politics of Counter-Terrorism: The Ordeal of Democratic States. Washington: Johns Hopkins Foreign Policy Institute, 1990.

Schecterman, Bernard, and Martin Slann, eds. Violence and Terrorism 91/92. Guilford, CT: The Dushkin Publishing Group, 1991.

St. John, Peter. Air Piracy, Airport Security, & International Terrorism: Winning the War Against Hijackers. New York: Quorum Books, 1991.

Seale, Patrick. Abu Nidal: A Gun for Hire. New York: Random House, 1992.

Segaller, Stephen. Invisible Armies: Terrorism Into the 1990s. London: Michael Joseph, 1986.

Shaw, Jennifer, ed. Ten Years of Terrorism. London: RUSI, 1979.

Smith, G. Davidson. Combating Terrorism. London: Routledge, 1990.

Sterling, Claire. The Terror Network. New York: Berkley Books, 1982.

Thatcher, Margaret. The Downing Street Years. New York: HarperCollins Publishers, 1993.

Tophoven, Rolf. GSG 9: German Response to Terrorism. Oldenburg: Bernard & Graefe Verlag Koblenz, 1985 (2nd ed.; tr. John Oldfield).

Tucker, H.H., ed. Combating the Terrorists: Democratic Responses to Political Violence. New York: Facts on File, 1988.

Wardlaw, Grant. Political Terrorism: Theory, Tactics, and Counter-Measures. Cambridge: Cambridge University Press, 1989 (2nd edition).

Weinberg, Leonard B. and Paul B. Davis. Introduction to Political Terrorism. New York: McGraw-Hill, 1989.

Wilkinson, Paul. Terrorism & the Liberal State. London: Macmillan, 1986 (second edition).

_____, ed. British Perspectives on Terrorism. London: George Allen & Unwin, 1981.

Wolf, John B. Antiterrorist Initiatives. New York: Plenum Press, 1989.

Wright, Peter, Paul Greengrass. Spycatcher. New York: Viking Penguin, 1987.

Zander, Michael. The Police and Criminal Evidence Act 1984. London: Sweet and Maxwell, 1985.

Ziegler, David W. War, Peace and International Politics. Glenview: Scott, Foresman & Co., 1990 (fifth edition).

Articles

n.a. "Northern Ireland (Emergency Provisions) Act 1973". Current Law Statutes Annotated. Ch.56.

n.a. "The Prevention of Terrorism (Temporary Provisions) Act 1974". Current Law Statutes Annotated. 1974.

n.a. "Northern Ireland: Problems and Perspectives". Conflict Studies #135. London: Institute for the Study of Conflict. 1982.

n.a. "Report on Legislative Responses to International Terrorism". Terrorism. 8:2 (1985).

n.a. "Ulster: Politics and Terrorism". Conflict Studies #36. London: ISC, June 1973.

n.a. "Northern Ireland: Reappraising Republican Violence". Conflict Studies #246. London: RISCT, Nov./Dec. 1991.

n.a. "Northern Ireland: An Anglo-Irish Dilemma?". Conflict Studies #185. London: ISC, March 1986.

n.a. "Political Violence and Civil Disobedience in Western Europe 1982". Conflict Studies #145. London: ISC (1983).

n.a. "Northern Ireland: Problems and Perspectives". Conflict Studies. London: ISC, 1982.

n.a. "Aviation Security Remains a Top Priority". ICAO Journal. 46:7 (July 1991).

n.a. "Vigilance at a Premium". Transport. 13:3 (May/June 1992).

n.a. "Criminal Law Reform: Bonn Hits at Urban Terrorists". German International. vol. 19 (January 1975).

Adams, James. "The Financing of Terror". TVI Report. 7:3 (1987).

Alexander, Yonah; Phil Baum, Raphael Danziger. "Terrorism: Future Threats and Responses". Terrorism. 7:4 (1985).

Alexander, Yonah. "Will Terrorists Use Chemical Weapons?". JINSA Security Affairs. June-July 1990.

Aston, Clive C. "Political Hostage-Taking in Western Europe". Conflict Studies #157. London: Institute for the Study of Conflict, 1984.

Barbot, Ivan, Jacques Franquet and Ange Mancini. "Combating Terrorism in France: New Bearings". International Criminal Police Review. #410 (Jan.-Feb. 1988).

Bernstein, Alvin H. "Iran's Low-Intensity War Against the United States". Orbis. 30:1 (Spring 1986).

Berry, Steven M. "Combatting Terrorism: The Legislative Approach". TVI Report. 9:3 (1990).

Berry, Steven M., tr. "The March Surprise". TVI Report. 10:2 (1991).

Blum, J. "The Protection of Persons and Installations at Risk: The German Way". Police Studies. 1:4 (Dec. 1978).

Bonnemaison, Antoine. "The Social Conflict in France". Conflict Studies #55. London: ISC, 1975.

Bonner, David. "Combating Terrorism in the 1990s: The Role of the Prevention of Terrorism (Temporary Provisions) Act 1989". Public Law. (Autumn 1989).

Bowden, Tom. "Men in the Middle: The UK Police". Conflict Studies #68. London: ISC, Feb. 1976.

Brenchley, Frank. (Report on legislation in Britain). Conflict Studies #164. London: Institute for the Study of Conflict, 1984.

Bremer, Paul L. III. "Counterterrorism Strategies and Programs". Terrorism. 10:4 (1987).

Brooke, Rt. Hon. Peter. "Politicians, Soldiers and the Place of the Security Forces". RUSI Journal. 137:2 (April 1992).

Bruce, Steve. "Northern Ireland: Reappraising Loyalist Violence". Conflict Studies #249. London: RISCT, March 1992.

Charters, David. "The Changing Forms of Conflict in Northern Ireland". Conflict Quarterly. vol. 1 (Fall 1980).

_____. "Organization, Selection, and Training of National Response Teams - A Canadian Perspective". Conflict Quarterly. 1:3 (1981).

_____. "Swift and Bold: An Appraisal of Hostage Rescue Operations". Conflict Quarterly. vol. 1 (Summer 1980).

Clutterbuck, Richard; Alison Jamieson and Juliet Lodge. "Counter-Terrorism in Europe: Implications of 1992" (3-part series). Conflict Studies #238. London: Institute for the Study of Conflict, 1991.

_____. "Terrorism and the Security Forces in Europe". Army Quarterly and Defence Journal. vol. 111 (Jan. 1981).

Crenshaw, Martha. "The Causes of Terrorism". Comparative Politics. 13:4 (July 1981).

Crozier, Brian. "Ulster: Politics and Terrorism". Conflict Studies #36. London: ISC (June 1973).

_____, ed. Annual of Power and Conflict, 1971. London: ISC, 1972.

_____, ed. Annual of Power and Conflict 1973-1974. London: ISC, 1974.

_____, ed. Annual of Power and Conflict 1975-1976. London: ISC, 1976.

_____, ed. Annual of Power and Conflict 1978-1979. London: ISC, 1979.

Dartnell, Michael. "France's *Action Directe:* Terrorists in Search of a Revolution". Terrorism and Political Violence. 2:4 (Winter 1990).

Das, Dilip K. "Impact of Antiterrorist Measures on Democratic Law Enforcement". Terrorism. vol. 13 (March/April 1990).

Dodd, Col. Norman L. (ret.). "The Corporals' War: Internal Security Operations in Northern Ireland". Military Review. vol. 56 (July 1976).

Drake, C.J.M. "The Provisional IRA: A Case Study". Terrorism and Political Violence. 3:2 (Summer 1991).

Farson, Stuart. "Schools of Thought: National Perceptions of Intelligence". Conflict Quarterly. (Spring 1989).

Finn, John E. "Public Support fo Emergency (Anti-Terrorist) Legislation in Northern Ireland: A Preliminary Analysis". Terrorism: An International Journal. 10:2 (1987).

Francis, Samuel T. "Terrorist Renaissance: France, 1980-1983". World Affairs (Washington). 146:1 (Summer 1983).

Friedlander, Oakley, Wilkinson, Kupperman, Motley, Alexander. "War Against Terrorism". Harvard International Review. 7:6 (May/June 1985).

Fromkin, David. "The Strategy of Terrorism". Foreign Affairs. 53:4 (July 1975).

Gregory, Frank. "Policing the Democratic State: How Much Force?". Conflict Studies #194. London: Institute for the Study of Conflict (July 1986).

Gregory, F.E.C. "Police Cooperation and Integration in the European Community: Proposals, Problems, and Prospects". Terrorism: An International Journal. 14:3 (July-Sept. 1991).

Gunter, Michael M. "Transnational Armenian Terrorism". Conflict Studies #229. London: RISCT (March 1990).

Gutteridge, William, ed. "Libya: Still a Threat to Western Interests?" Conflict Studies #160. London: ISC (1984).

Halperin, Morton. "The 'X' Factor in Foreign Policy". Brookings Research Report #140. Washington: The Brookings Institution, 1975.

Harmon, Christopher C. "Illustrations of "Learning" in Counterinsurgency". Comparative Strategy. 11:1 (Jan-March 1992).

Hayes, Brian. "The Effects of Terrorism in Society: An Analysis, with Particular Reference to the United Kingdom and the European Economic Community". Police Studies. vol. 2 (Fall 1979).

Hewitt, Christopher. "The Costs of Terrorism: A Cross-National Study of Six Countries". Terrorism: An International Journal. 11:3 (1988).

Hoffman, Bruce. "Right Wing Terrorism in Europe". Conflict. 5:3 (1984). See also article by same title, Orbis. 28:1 (Spring 1984).

Horchem, Hans Josef. "West Germany's Red Army Anarchists". Conflict Studies #46. London: ISC, 1974.

_____. "Right-wing Extremism in Western Germany". Conflict Studies #65. London: ISC, 1975.

_____. "Terrorism in West Germany". Conflict Studies #186. London: ISC (May 1986).

_____. "The Decline of the Red Army Faction". Terrorism and Political Violence. 3:2 (Summer 1991) tr. A.M. Stewart.

_____. "Terrorism and Government Response: The German Experience". Jerusalem Journal of International Relations. 4:3 (1980).

Jackson, J.D. "The Northern Ireland (Emergency Provisions) Act 1987". Northern Ireland Legal Quarterly. 39:3 (Autumn 1988).

Jamieson, Alison. "Drug Trafficking After 1992: A Special Report". Conflict Studies #250. London: RISCT, April 1992.

Janke, Peter. "Ulster: A Decade of Violence". Conflict Studies #108. London: ISC, 1979.

_____, and D.L. Price. "Ulster: Consensus and Coercion". Conflict Studies #50. London: ISC, 1974.

Jeffery, Keith. "Intelligence and Counter-Insurgency Operations: Some Reflections on the British Experience". Intelligence and National Security. 2:1 (January 1987).

Jenkins, Brian. "International Terrorism: A Balance Sheet". Survival. 17:4 (July/August 1975).

Jenkins, Philip. "Under Two Flags: Provocation and Deception in European Terrorism". Terrorism: An International Journal. 11:4 (1988).

Kellen, Konrad. "The RAF in West Germany: Stronger than Ever?". TVI Report. 7:2 (1987).

Kerstetter, Wayne A. "Terrorism and Intelligence". Terrorism: An International Journal. vol. 3, nos. 1 & 2 (1979).

Krauss, Detlef. "The Reform of Criminal Procedure Law in the Federal Republic of Germany". The Juridical Review. (Dec. 1979).

Laqueur, Walter. "Reflections on Terrorism". Foreign Affairs. 65:1 (Fall 1986).

Lasky, Melvin J. "Ulrike Meinhof & the Baader-Meinhof Gang". Encounter. XLIV:6 (June 1975).

Leventhal, Paul L. and Milton M. Hoenig. "The Hidden Danger: Risks of Nuclear Terrorism". Terrorism. 10:1 (1987).

Levy, Rudolph. "Countering the Terrorist Threat". Military Intelligence. 10:4 (Oct.-Dec. 1984)

Livingstone, Neil C. "States in Opposition: The War Against Terrorism". Conflict. 3:2,3 (1981).

Lynch, Edward A. "International Terrorism: The Search for a Policy". Terrorism. 9:1 (1987).

McDonald, Ambassador John W. Jr. "The United Nations Convention Against the Taking of Hostages: The Inside Story". Terrorism: An International Journal. 6:4 (1983).

McGuire, Frank G. "Gulf Crisis Triggers Security Step-Up". Air Transport World. 28:3 (March 1991).

McMahon, Bernard F. "Low-Intensity Conflict: The Pentagon's Foible". Orbis. 34:1 (Winter 1990).

Maguire, Keith. "The Intelligence War in Northern Ireland". International Journal of Intelligence and Counterintelligence. vol. 4 (Summer 1990).

_____. "Republican Terrorism in Northern Ireland". Armed Forces. 7:11 (Nov. 1988).

_____. "Loyalist Terrorism in Northern Ireland". Armed Forces. 7:10 (Oct. 1988).

_____. "The Irish National Liberation Army". Armed Forces. 6:6 (June 1987).

Metz, Steven. "Foundation for a Low-Intensity Conflict Strategy". Comparative Strategy. 8:2 (1989).

Miller, Abraham. "The Evolution of Terrorism". Conflict Quarterly. vol. 5 (Fall 1985).

Miller, David. "The Use and Abuse of Political Violence". Political Studies. vol. XXXII, no. 3 (September 1984).

Miller, Reuben. "Acts of International Terrorism: Governments' Responses and Policies". Comparative Political Studies. 19:3 (Oct. 1986).

Moss, Robert. "Urban Guerrilla Warfare". Adelphi Papers #79. London: IISS (1971).

Moxon-Browne, Edward. "Terrorism in France". Conflict Studies #144, London: ISC (1983).

_____. "Spain and the ETA: The Bid for Basque Autonomy". Conflict Studies #201. London: ISC (July 1987).

Nathan, James A. "The New Feudalism". Foreign Policy. #42 (Spring 1981).

Nelson, William R. "Terrorist Challenge to the Rule of Law: The British Experience". Terrorism. vol. 13 (May/June 1991).

_____. "New Developments in Terrorist Trials in Northern Ireland". Political Communication and Persuasion. vol. 7 (July/September 1990).

Oakley, Robert. "International Terrorism". Foreign Affairs. 65:3 (1987).

Ofrie, Arie. "Intelligence and Counterterrorism". Orbis. 28:1 (Spring 1984).

O'Halpin, E. "Anglo-Irish Security Cooperation: A Dublin Perspective". Conflict Quarterly. vol. 10 (Fall 1990).

Picard, Robert G. "Press Relations of Terrorist Organizations". TVI Report. vol. 9, no. 4 (1990).

Pipes, Daniel. "Why Asad's Terror Works and Qadhdhafi's Does Not". Orbis. 33:4 (Fall 1989).

Pisano, Vittorfranco S. "Terrorist Ethnic Separatism in France and Italy". Conflict. 8:2,3 (1988).

Pluchinsky, Dennis. "Middle Eastern Terrorist Activity in Western Europe: A Diagnosis and Prognosis". Conflict Quarterly. vol. 6 (Summer 1986).

_____. "Middle Eastern Terrorism in Europe: Trends and Prospects". Terrorism: An International Journal. 14:2 (April-June 1991).

_____. "Terrorist Documentation". Terrorism: An International Journal. 14:3 (July-Sept. 1991).

Polgar, Tom. "The Intelligence Services of West Germany". International Journal of Intelligence and Counterintelligence. 1:4 (1987).

Prince, James. "Is There a Role for Intelligence in Combating Terrorism?". Conflict. 9:3 (1989).

Rubin, Alfred P. "Current Legal Approaches to International Terrorism". Terrorism: An International Journal. 13:4,5 (July-Oct. 1990).

Rycus, Mitchell J. "Urban Terrorism: A Comparative Study". The Journal of Architechtural and Planning Research. 8:1 (Spring 1991).

St. John, Ronald Bruce. "Libyan Terrorism: The Case Against Gaddafi". Contemporary Review. 261:1523 (Dec. 1992).

Sacopulos, Peter J. "Terrorism in Britain: Threat, Reality, Response". Terrorism. 12:3 (1989).

Schiller, David. "Germany's Other Terrorists". Terrorism: An International Journal. 9:1 (1987).

_____. "The Economic Implications of Terrorism as Seen From Germany". TVI Report. 10:2 (1991).

_____. "Current Terrorist Activities in Germany". TVI Journal. vol. 14 (Winter 1985).

_____. "West Germany Coping with Terrorism: The Evolution of a Police Organization". TVI Report. 6:2 (Fall 1985).

Schlagheck, Donna, and James L. Walker. "Democratizing Nations and Terrorism: The Effect of Political Violence on Civil Liberties". Current World Leaders. 35:2 (April 1992).

Simpson, Howard R. "European Terrorism". TVI Report. 10:1 (1991).

Smith, G. Davidson. "Issue Group Terrorism: Animal Rights Militancy in Britain". TVI Journal. vol. 5 (Spring 1985).

_____. "Political Violence in Animal Liberation". Contemporary Review. 247:1434 (July 1985).

Smith, Lt.-Col. T. "Counter Terrorism: Administrative Response in the United Kingdom". Public Policy and Administration. 2:1 (Spring 1987).

Smyth, Jim. "Stretching the Boundaries: The Control of Dissent in Northern Ireland". Terrorism: An International Kournal. 11:4 (1988).

Sofaer, Abraham. "Terrorism and the Law". Foreign Affairs. 64:5 (Summer 1986).

_____. "The US-UK Supplementary Extradition Treaty". Terrorism. 8:4 (1986).

Spillane, Jay M. "Terrorists and Special Status: The British Experience in Northern Ireland". Hastings International and Comparative Law Review. 9:3 (Spring 1986).

Tuzo, Harry. "Terrorists and Freedom Fighters". Conflict Studies #200. London: ISC (June 1987).

Wall, Brian. "Industry Sectors Must Work Together to Promote Security". ICAO Journal. 47:4 (April 1992).

Weinberg, Leonard. "Turning to Terror: The Conditions Under Which Political Parties Turn to Terrorist Activities". Comparative Politics. 23:4 (July 1991).

Wieviorka, Michel. "France and Political Violence: 1968 to the Present". Jerusalem Journal of International Relations. 13:2 (June 1991); tr. Noal Mellott.

_____. "France Faced with Terrorism". Terrorism: An International Journal. 14:3 (July-Sept. 1991).

Wilkinson, Paul. "Terrorist Targets and Tactics: New Risks to World Order". Conflict Studies #236. London: ISC (December 1990).

_____. "The Lessons of Lockerbie". Conflict Studies #226. London: ISC (December 1989).

_____. "State-Sponsored International Terrorism: The Problems of Response". World Today. (London), vol. 40 (July 1984).

Wright, Joanne, and Keith Bryett. "Propaganda and Justice Administration in Northern Ireland". Terrorism and Political Violence. 3:2 (Summer 1991).

Other Sources

Allen, Patrick. "Buzzards & Eagles". Air Forces Monthly. July 1994.

Bierman, John, and Fionnuala O'Connor. "Britain's Meanest Corner". Maclean's. May 13, 1991.

Breslau, Karen, and Charles Lane. "Bad Time for Terrorists". Newsweek. July 2, 1990.

Phillips, Andrew. "Skinheads, Jackboots". Maclean's. Nov. 23, 1992.

_____. "Spying on the Spies". Maclean's. 106:6; Feb. 8, 1993 p.34.

_____. "Hitting a 'Soft' Target". Maclean's. Aug. 13, 1990.

Prokesch, Steven. "Anti-IRA Drive of 1970's Stirs Furor in Britain". New York Times. Feb. 1, 1990, p.A7.

"Irish Court Frees Accused Terrorist". Washington Post. June 14, 1988. p.A14 (AP).

"We Are At War Here". Maclean's. Nov. 19, 1990.

"Human Bombs". Maclean's. Nov. 5, 1990.

"A Tide of Terrorism". Newsweek. Feb. 18, 1991.

"New Targets for Terror". Newsweek. Aug. 13, 1990.

"Terror: Iraq's Second Front". Newsweek. Jan. 28, 1991.

"Germany's Strains, Europe's Fears". The Economist. 325:7788 (Dec. 5, 1992).

"The New Outlaws". The Economist. August 15, 1992, p.46.

"Terror in the New Germany". Newsweek. Apr. 15, 1991.

"IRA ties net pair jail". Winnipeg Free Press. Aug. 21, 1990. p.16.

"IRA claims blast". Winnipeg Free Press. August 1, 1990. p.24 (AP).

"Royal plot foiled". Winnipeg Free Press. Dec. 16, 1991. p.A3.

"London police form antiterror squads". Winnipeg Free Press. May 10, 1991. p.30 (Reuters).

"IRA bomb near PM's home knocks policeman off feet". Winnipeg Free Press. January 11, 1992, p.A9 (Baltimore Sun).

"Major vows IRA arrests". Winnipeg Free Press. January 21, 1992, p.C36 (Baltimore Sun).

"Suspected IRA men killed by soldiers 'got their desserts': Protestant leader". Winnipeg Free Press. February 18, 1992, n.p.

"Scotland Yard, MI5 wrangle in public over who should lead fight against IRA". Winnipeg Free Press. April 25, 1992, p.A11.

"New anti-IRA chief draws fire". Winnipeg Free Press. April 25, 1992, p.A16 (Baltimore Sun).

"Prince meets troops". Winnipeg Free Press. November 2, 1992, p.A5.

"Ulster's largest Protestant extremist group outlawed". Winnipeg Free Press. August 11, 1992, p.A5 (Washington Post).

"Roadblocks set up". Winnipeg Free Press. December 7, 1992, p.A4.

"PM vows no rest for IRA killers". Winnipeg Free Press. March 24, 1993, p.A5.

"Spy in the sky". Winnipeg Free Press. June 15, 1993, p.A9.

"Kidnappers warn Germany". Winnipeg Free Press. July 19, 1991, p.19.

"Raids on neo-Nazis yield massive cache of arms, propaganda". Winnipeg Free Press. December 4, 1991, p.A18.

Moseley, Ray. "Skinheads, neo-Nazis no political threat, German monitor says". Winnipeg Free Press. February 22, 1992, p.A8.

"Tighter asylum laws proposed". Winnipeg Free Press. November 17, 1992, p.C12.

"Germany to tackle neo-Nazi problem". Winnipeg Sun. October 5, 1992, p.10.

"Summit an international test for Munich". Winnipeg Free Press. July 6, 1992, p.A4.

"Neo-Nazi violence escalates". Winnipeg Free Press. November 24, 1992, p.D7.

Fisher, Marc. "Germany attacks neo-Nazi violence". Winnipeg Free Press. November 28, 1992, p.B22.

"Ethnic hatred worries Kohl". Winnipeg Free Press. November 26, 1992, p.D12.

Fisher, Marc. "Extremist leaders face loss of rights". Winnipeg Free Press. November 29, 1992, p.A4.

Kinkel, Klaus. "What Germany Must Do". Winnipeg Free Press. December 3, 1992, p.A7 (op.ed.).

Moisi, Dominique. "Terrorists Challenge France". Winnipeg Free Press. September 19, 1986, p.7 (Los Angeles Times).

Goldsmith, Michael. "Long soft on terrorists, France reaping whirlwind". Winnipeg Free Press. September 20, 1986, p.4 (AP).

"Lebanese group claims bombing". Winnipeg Free Press. September 19, 1986, p.19.

"Former Iranian PM, aide slain in Paris suburb". Winnipeg Free Press. August 9, 1991, p.48 (Reuters - Agence France Presse).

"Visas nearly trip up suspects in slaying of former Iranian PM". Winnipeg Free Press. August 14, 1991, p.16 (AP).

"Suspect in slaying arrested". Winnipeg Free Press. August 22, 1991, p.48 (Reuters).

"Basque leader captured in France". Winnipeg Free Press. March 30, 1992, p.A3.

"Advisers axed in Habash furore". Winnipeg Free Press. January 31, 1992, p.E68 (Reuters-AP).

"Censure motion filed". Winnipeg Free Press. February 8, 1992, n.p.

"Guerrilla leader leaving France in political storm". Winnipeg Free Press. February 1, 1992, p.A10 (Reuters).

"As heads roll in France, PLO leader returns to Tunis". Winnipeg Free Press. February 2, 1992, n.p. (AP-Reuters-CP).

Davis, Helen. "Habash affair leaves French red-faced". Winnipeg Free Press. February 6, 1992, p.A7 (op. ed.).

"Police rescue toddlers, kill 'HB'". Winnipeg Free Press. May 16, 1993, p.A1, A4.

"Mortar rounds fired at Heathrow airport". Winnipeg Free Press. March 10, 1994, p.A15 (AP).

Dickey, Christopher. "Treating a terrorist: A scandal rocks France". Newsweek. February 10, 1992, p.37.

Sancton, Thomas. "The Teacher and the Terrorist". Time. May 24, 1993, p.22-23.

"Carlos lawyer a terrorist: report". Winnipeg Free Press. August 18, 1994, p.D12.

Pipes, Daniel. "Head off Algerian fundamentalists". Winnipeg Free Press. August 15, 1994, p.A6 (Washington Post).

"Notorious terrorist 'the Jackal' caged in France". Winnipeg Free Press. August 16, 1994, p.A1.

Davis, Helen. "Politics trapped Carlos". Winnipeg Free Press. August 18, 1994, p.A7.

Riding, Alan. "France assailed for deporting Iranians". Winnipeg Free Press. January 4, 1994, p.A4.

"EC to build visa wall around 12-nation bloc". Winnipeg Free Press. November 25, 1993, p.B7.

"Basque leader captured in France". Winnipeg Free Press. March 30, 1992, p.A3.

"Madrid blasts kill seven". Winnipeg Free Press. June 22, 1993, p.A4.

"Shops smouldering across Europe after Kurdish protests". Winnipeg Free Press. November 5, 1993, p.A8.

"Germany bans separatist Kurdish party". Winnipeg Free Press. November 27, 1993, p.D22.

"Angry Turks set German police car ablaze". Calgary Herald. June 11, 1994, p.B13.

"Nazi gestures, slogans illegal". Winnipeg Free Press. May 21, 1994, p.D21.

"Britain wants suspects to sing". Winnipeg Free Press. October 7, 1993, p.C10.

'Fatima B.' "A veil of tears in Algeria". Winnipeg Free Press. April 6, 1994, p.A6.

"Fugitive leader of violent Turkish underground leftist group caught in France". Winnipeg Free Press. September 12, 1994, p.A8 (AP).

Television

Understanding Northern Ireland. Prairie Public Television, May 12, 1993. Production of Ulster Television.