UNIVERSITY OF MANITOBA

MECH 4860—Engineering Design



Ladder Design

Phase III

Final Design Report

December 6, 2017

Client: Fort Garry Fire Trucks
Project Advisor: Dr. Qingjin Peng, P.Eng

Shaun Gadient _____

Ang Li _____

Joshua Mitchell-Dueck _____

Amritpal Sekhon _____



UNIVERSITY OF MANITOBA

TEAM 9: Creative Ladder Innovations for Manitoba

climb

Team 9: Creative Ladder Innovations for Manitoba
EITC E2-290, 66 Chancellor's Circle
University of Manitoba, Winnipeg, MB R3T 5V6

December 6, 2017

Mr. Gordan Draskovic
RR#2, 53 Bergen Cutoff Road
Winnipeg, MB R3C 2E6

Dr. Paul Labossiere
EITC E2-327, 66 Chancellor's Circle
University of Manitoba, Winnipeg, MB R3T 2N2

Dear Mr. Draskovic and Dr. Labossiere,

On behalf of my colleagues on Team 9, please accept this letter and package entitled "Ladder Design" as our final design report submission for the Fall 2017 MECH 4860: Engineering Design class at the University of Manitoba. The report outlines the definition of the project, the conceptual design work, and the detailed design work done to prepare a suitable adjustable ladder design for Fort Garry Fire Trucks. The report presents design validation using SolidWorks finite element analysis and preliminary manufacturing and assembling drawings prepared according to the internal standard specified by Fort Garry Fire Trucks. The report also analyzes costs associated with the proposed design.

I am confident that this report satisfies the requirements set forth by Fort Garry Fire Trucks. However, should you have any concerns about the content of the package I encourage you to contact me so I can address them in a timely manner.

Sincerely,

Joshua Mitchell-Dueck
Team 9

Executive Summary

The design of an adjustable fire truck access ladder which has a minimized profile when stowed and can be quickly adapted for a range of custom fire truck sizes is required by the client, Fort Garry Fire Trucks. The ladder must incorporate slip-resistant components, have a maximum stowed profile of 8", and must support a 500 lb static load with no deformation, using a safety factor of 2. The bolting of the ladder to the body of the truck is not considered in this report.

In the selected design, the upper and lower ladder sections are connected by a bracket bolted at the bottom of the upper ladder section. The bracket houses a pivot point at which the lower ladder section rotates on a Grade 8 steel bolt, housed in a nylon bushing, to deploy and stow. Two position control springs, attached on either side of the ladder between the bracket and the lower ladder section, hold the lower ladder section in the deployed or stowed position.

The ladder is connected to the body of the truck at two points in the upper ladder section. The ladder is connected to a hinge point in the upper connection bracket on its right and left runners, using a Grade 8 steel bolt housed in a nylon bushing. The ladder also connects on both sides to a hinge point attached to an A-frame mount, connected to the lower connection bracket. The lowest factor of safety of 2 is in the upper connection bracket, while the runners of the upper ladder section have a factor of safety of 31.17 for one load case. The total weight of the ladder is 115.39 lb, which will be reduced for shorter ladders.

All brackets in the design are laser cut from A36 Hot Rolled Steel of varying thickness, as are the links in the A-frame mount. The ladder runners are saw-cut aluminum 6061-T6. The slip-resistant ladder steps are sourced from Cast Products Inc., a rotary latch to mechanically lock the ladder in its stowed position is sourced from Southco, and a position control gas strut to prevent uncontrolled ladder deployment is sourced from McMaster-Carr.

A designer can adjust the ladder dimensions for various geometries by using the Excel Geometry calculator and a parametric SolidWorks file, within an estimated 10 minutes. The manufacture and assembly is estimated to take approximately 7 hours; 34 minutes of welding are required.

The maximum ladder cost is $1,761.34 CAD for the longest ladder that would be required by Fort Garry Fire Trucks. Shortening the ladder will decrease the cost, and given that several over-estimations were made when analyzing the cost, it is reasonable to assume that the ladder can be manufactured for less than $1,500 CAD.

Table of Contents

I List of Figures **vii**

II List of Tables **x**

1 Introduction **1**

1.1 Problem Statement and Project Objectives 3

1.2 Constraints and Limitations 3

1.2.1 Cost Constraint 4

1.2.2 Client Constraint 4

1.2.3 NFPA Constraint 5

1.2.4 Time Constraint 5

1.3 Design Process 5

1.4 Client Needs and Product Specifications 6

1.4.1 Customer Needs 7

1.4.2 Product Specifications and Metrics 9

2 Conceptual Design and Concept Selection **11**

2.1 Design Benchmark 11

2.2 Patent Search 12

2.2.1 Folding Ladder 12

2.2.2 Ladder Accessories 13

2.3 Upper Ladder Section Concepts 14

2.3.1 Preliminary Evaluation 16

2.4 Upper Section Concept Screening and Scoring 18

2.4.1 Concept Screening 18

2.4.2 Criteria Weighting 19

2.4.3 Concept Scoring 20

2.5 Upper Ladder Section Selection 21
2.6 Lower Ladder Section Conceptual Design and Selection 22
2.6.1 Lower Concept Evalutation 23
2.6.2 Lower Concept Selection 24

3 Detailed Design **25**
3.1 Upper Ladder Section Design 25
3.1.1 Ladder Runners and Steps 26
3.1.2 Support Joints 26
3.2 Lower Ladder Section Design 30
3.2.1 Ladder Runners and Steps 31
3.3 Design for Modularity 32
3.3.1 Ladder Adjustment Equations 33
3.3.2 Adjusting the Design 36
3.4 Design Components 37
3.4.1 Latch 37
3.4.2 Gas Strut 39
3.4.3 Position Control Spring 39
3.4.4 Bushings 41
3.4.5 Handrail 41
3.5 Standard Operating Procedure 43
3.6 Final Design 44

4 Finite Element Analysis **46**
4.1 Top Mounting Bracket FEA 46
4.2 Bottom Mounting Bracket FEA 51
4.3 A-Frame Hinges FEA 55
4.4 Upper-Lower Connection Bracket FEA 58
4.5 Lower Section Runner FEA 62
4.6 Upper Section Runner FEA 66
4.6.1 Case 1 66
4.6.2 Case 2 71
4.7 FEA Summary 77

5 Manufacturing and Assembly **78**
5.1 Raw Material Handling 79
5.1.1 Aluminum Components 79
5.1.2 Steel Components 80
5.2 Welding 80
5.3 Assembly 83

6 Cost Analysis **87**
6.1 Component and Material Costs 87
6.2 Labour Costs 89
6.3 Cost Summary 89

7 Summary and Recommendations **90**

8 References **92**

Appendices **94**

List of Figures

1.1 Fire apparatus access ladder with the lower joint attached to back of the body. 2
1.2 Fire apparatus access ladder with the lower joint attached to the back step. 2
1.3 Fire truck with rotating rear water chute to allow runoff on both sides of the apparatus. 4
1.4 Order form schematic showing the access ladder's general profile when deployed. 6
1.5 Access ladder mounted on the step platform at the back of the truck. 7
1.6 Access ladder mounted on the wall at the back of the truck. 7

2.1 Benchmark ladder showing the lower section hinge mount. 11
2.2 Benchmark ladder showing the upper section hinge mount. 11
2.3 Deployed folding ladder for concrete mixer truck schematic 12
2.4 Stowed folding ladder for concrete mixer truck schematic 12
2.5 Hinge and locking assembly patent 13
2.6 Concept recommended by FGFT in which a top platform is placed above the top ladder hinge. 22

3.1 Upper ladder section, shown deployed. 26
3.2 Upper ladder section, shown stowed. 26
3.3 Connection point between the upper ladder runner and step. 27
3.4 Schematic showing upper section step dimensions. 27
3.5 View of upper connection bracket. 28
3.6 Isometric view of the top hinge point and platform. 28
3.7 A-frame hinge and lower bracket. 28
3.8 Upper-lower connection bracket attachment to the upper runner. 29
3.9 Upper-lower connection bracket attachment to the lower runner. 29
3.10 Isometric view of the lower ladder section, deployed. 30
3.11 Connection point between the lower section runner and step. 31

3.12 Schematic showing lower section step dimensions. 31
3.13 Schematic showing the modular design variables. 32
3.14 Geometry used to solve for the climbing angle θ_C. 35
3.15 Two Stage — Bottom, Integrated Bumper Rotary Latch model 38
3.16 U-shaped anchor to mate with the rotary latch. 38
3.17 Connection of the rotary latch to the upper-lower connection bracket 38
3.18 Geometry of the gas strut in the stowed and deployed positions. 39
3.19 Corrosion-resistant stainless steel spring 40
3.20 Position control spring geometry. 41
3.21 Handrail rod. 42
3.22 End bracket used to support the handrail 43
3.23 Centre bracket used to support the handrail 43
3.24 Bracket gasket used to attach the brackets to the ladder 43
3.25 Attachment of the handrail to the ladder flat bar 43
3.26 Rotary latch operating mechanism (reproduced). 44
3.27 Completed adjustable ladder design. 45

4.1 Applied load and fixed geometries for the top mounting bracket. 47
4.2 H-adaptive convergence plot for the top mounting bracket. 48
4.3 Final mesh for FEA of the top mounting bracket. 48
4.4 Deflection plot of the top mounting bracket under loading. 49
4.5 Von Mises stress distribution in the top mounting bracket under loading. . . 50
4.6 Critical von Mises stress in the top mounting bracket under loading. 51
4.7 Applied load and fixed geometries for the bottom mounting bracket. 52
4.8 Final mesh for FEA of the bottom mounting bracket. 53
4.9 Deflection plot of the bottom mounting bracket under loading. 53
4.10 Von Mises stress distribution showing divergent stress concentration in the bottom mounting bracket. 54
4.11 Von Mises stress distribution in the bottom mounting bracket under loading. 54
4.12 Applied load and fixed geometries for the A-frame hinge. 55
4.13 H-adaptive convergence plot for the A-frame hinge. 56
4.14 Final mesh for FEA of the A-frame hinge. 56
4.15 Deflection plot of the A-frame hinge under loading. 56
4.16 Von Mises stress distribution in the A-frame hinge under loading. 57

4.17 Critical von Mises stress in the A-frame hinge under loading. 57
4.18 Applied load and fixed geometries for the upper-lower connection bracket. . 58
4.19 H-adaptive convergence plot for the upper-lower connection bracket. 59
4.20 Final mesh for FEA of the upper-lower connection bracket. 60
4.21 Deflection plot of the upper-lower connection bracket under loading. 60
4.22 Von Mises stress distribution showing divergent stress concentration in the bottom mounting bracket. 61
4.23 Von Mises stress distribution in the upper-lower connection bracket under loading. 61
4.24 Applied load and fixed geometries for the lower section runner. 62
4.25 H-adaptive convergence plot for the lower section runner. 63
4.26 Final mesh for FEA of the lower section runner. 64
4.27 Deflection plot of the lower section runner under loading. 64
4.28 Von Mises stress distribution showing divergent stress concentration in the bottom mounting bracket. 65
4.29 Von Mises stress distribution in the lower section runner under loading. . . 65
4.30 Case 1: applied load and fixed geometries for the upper section runner. . . 67
4.31 Case 1: final mesh for FEA of the upper section runner. 67
4.32 Case 1: h-adaptive convergence plot for the upper section runner. 68
4.33 Case 1: deflection plot of the upper section runner under loading. 69
4.34 Case 1: von Mises stress distribution in the upper section runner under loading. 69
4.35 Case 1: critical von Mises stress in the upper section runner under loading. 70
4.36 Case 2: applied load and fixed geometries for the upper section runner. . . 72
4.37 Case 2: final mesh for FEA of the upper section runner. 72
4.38 Case 2: h-adaptive convergence plot for the upper section runner. 73
4.39 Case 2: deflection plot of the upper section runner under loading. 73
4.40 Case 2: von Mises stress distribution showing divergent stress concentration in the bottom mounting bracket. 74
4.41 Case 2: von Mises stress in the upper section runner under loading. 75
4.42 Case 2: close up view of actual critical von Mises stress in the upper section runner under loading. 76

5.1 P-1130 subassembly weld locations 81

5.2 P-1132 subassembly weld locations 82
5.3 P-1133 assembly instructions. 85
5.4 P-1135 assembly instructions. 86

List of Tables

I	Customer needs sorted into categories and given degrees of importance	8
II	Product specifications with corresponding metrics	9
III	Conceptual designs for the upper ladder section	14
IV	Concept screening table	19
V	Criteria weighting matrix	20
VI	Ranking of screened concepts	20
VII	Weighted scoring of screened concepts	21
VIII	Conceptual designs for the lower ladder section	22
IX	Variables used in modular design	33
X	Part numbers.	78
XI	Cost breakdown	88
XII	Estimated labour costs	89

1. Introduction

Fort Garry Fire Trucks **(FGFT)** is a Winnipeg firm specializing in the design and manufacture of fire apparatuses such as fire trucks, custom pumpers, aerial ladders, and water delivery tankers. Its primary customers are towns, cities, and municipalities throughout Canada and the USA [1]. As the largest builder of fire apparatuses in Canada, FGFT is I.S.O. 9001 certified and must remain consistent in its design and manufacturing techniques.

While the bulk of the fire apparatus design work is done in house, a portion of the manufacturing prior to final assembly is outsourced, including that of the ladders used to gain access to the top of the fire apparatus. As shown in Figures 1.1 and 1.2, changes in fire apparatus body dimensions and overall body shape influence how the access ladder must be designed [2]. Pictures of current designs were provided by the client and used with his permission.

Many factors must be considered, including the length of the ladder between attachment points, the distance between steps, the location of the lower joint, and the ladder's profile when stowed. Currently, FGFT receives custom-built ladders from its main supplier, Ziamatic Corp, but would prefer to be able to manufacture the access ladders themselves.

This report describes the work done by Team 9: Creative Ladder Innovations for Manitoba **(CLIMB)** to develop a suitable ladder design for FGFT, as part of the MECH 4860: Engineering Design course at the University of Manitoba. The report consists of an introduction to the project; details on project-relevant research; an overview of the conceptual design work and the concept selection process; the recommended design and its associated Finite Element Analysis **(FEA)** validation; and preliminary manufacturing drawings prepared according to FGFT standards.

The remainder of Section 1 outlines the design project, customer needs and technical product specifications, and the limitations and constraints imposed on the project. Section 2 gives an overview of the conceptual design work and selection process.

Next, Section 3 gives in-depth design details for the recommended ladder, including the geometries of the upper and lower ladder sections, equations used to calculate ladder



Fig. 1.1. Fire apparatus access ladder with the lower joint attached to back of the body [2].



Fig. 1.2. Fire apparatus access ladder with the lower joint attached to the back step [2].

lengths for different fire trucks, component selection, and the standard ladder operating procedure. The proposed design is validated in Section 4 using SolidWorks FEA and preliminary engineering drawings are presented in Section 5 along with ladder assembly instructions. Lastly, a cost analysis is presented in Section 6 and a summary of the work done and set of recommendations is provided in Section 7.

Appendices B through D contain information on the management of the design project, preliminary manufacturing drawings, and variable geometry calculations.

1.1. Problem Statement and Project Objectives

FGFT requires the design of a rear access ladder that is adjustable for a range of fire truck body sizes. These ladders are often placed on the rear of the fire truck and allow firefighters to access the gear stored on top of the appparatus. The ladders consist of an upper section and lower section. The upper section vertically spans the body of the truck and houses a hinge at its bottom to connect to the lower section. The lower section provides easier access from the ground to the upper ladder section. While ladder designs are different between companies, the concept does not vary greatly. Current ladder designs provided by Ziamatic do not meet FGFT's needs as they are too bulky when stowed and are too expensive.

The main project deliverable is a SolidWorks model of an adjustable ladder design. The design should be validated with FEA and be accompanied with preliminary engineering drawings and assembly instructions. Lastly, a cost-benefit analysis of the proposed design should be performed [3]. This will allow FGFT to reduce its reliance on external vendors and suppliers, giving the company more freedom in designing custom fire truck apparatuses and reducing the cost to implement the access ladder. FGFT designers will be able to quickly specify the ladder instead of relying on vendors to fill an order on time.

For the project to be considered successful, each of the four deliverables mentioned above must be met, which will allow the company to use this report and its accompanying files to begin manufacturing the ladders immediately, following approval from a professional engineer. The design team must have a clear understanding of the company's needs, and must adhere to the project schedule, shown in Appendix A, to ensure deliverables and milestones are met.

In the design process, an assumption was made that the ladder should be designed to accomodate the tallest fire truck of 130", as specified by FGFT. Furthermore, the scope of the project does not include how to attach the ladder to the body of the fire truck.

1.2. Constraints and Limitations

Constraints and limitations were determined by consulting with the company contact, Gordan Draskovic, reviewing the standard operating procedure for current designs, and reviewing the course and time requirements. The main constraints identified were cost, the ladder's profile when stowed, the ladder's profile when deployed, and compliance with

automotive fire apparatus standards provided by the National Fire Protection Association **(NFPA)**. A time constraint was identified, and is based on course deadlines for MECH 4860.

1.2.1. Cost Constraint

The total cost of the final design must not exceed $1,500, and is expected to be within the range of $1,200-$1,500 per unit. This cost includes manufacturing and engineering/office labour at $72/hour, all materials used, and all purchased components.

1.2.2. Client Constraint

The main design constraint is the ladder's profile when it is both stowed and deployed. When stowed, the ladder must provide sufficient clearance for any device or system located on the back of the fire apparatus to function as intended. For instance, the fire truck shown in Figure 1.3 has a water chute, which rotates to allow excess water to run off to the left or right of the apparatus. However, the current ladder's profile when stowed prevents the chute from fully rotating to the left of the truck. Therefore, the client has requested that the ladder protrude no more than 8" from the body of the apparatus when stowed.



Fig. 1.3. Fire truck with rotating rear water chute to allow runoff on both sides of the apparatus [2].

1.2.3. NFPA Constraint

Various other design constraints are supplied by the standard from the NFPA, the most critical of which are mentioned here. Other constraints imposed by the standard constitute needs and are shown in Table I on page 8. When deployed, the design must provide a minimum clearance of 8" between the front edges of the ladder steps and the body. The bottom step of the upper section of the ladder must have a minimum clearance of 18" from the body. The first step from the ground to the ladder must be less than 24" measured vertically from the ground. Additionally, FGFT specified that the same vertical distance must be greater than 5". The standard was also used to determine metrics for the product specifications, which constrain the project scope.

1.2.4. Time Constraint

Lastly, the time constraint was set to meet the deadlines for course deliverables. While a detailed breakdown of the schedule is available in Appendix A, key deliverables identified as the submissions of the Project Definition Report (October 2, 2017), the Conceptual Design Report (October 27, 2017), and the Final Design Report (December 6, 2017). Furthermore, the project is also constrained by the amount of work each group member can do each week due to other school, work, and personal responsibilities. It was estimated each member can work approximately 20 hours per week on the project. Reviewing the amount of work done over the course of the semester, the time estimate is accurate.

1.3. Design Process

The design process is broken down into three phases: project definition, conceptual design, and detailed design. The project definition phase consisted of defining the client needs and product specifications to fully understand the design project, and concluded on October 2 with the submission of the Project Definition Report.

The conceptual design phase consisted of externally and internally searching for concepts, by reviewing patents and competitors' designs, and undergoing individual and group brainstorming sessions. Following this, the concepts were screened and scored against one another to recommend a design for optimization. The focus in the conceptual design phase was to develop concepts for the upper and lower sections of the ladder. Other components of the design, such as hinges, latches, bushings, and the adjustment method were

considered in the detailed design phase.

Lastly, the detailed design phase consisted of material selection and dimensional optimizations for each material, considerations on how to make the design adjustable, FEA validation of the proposed design, and preparing preliminary manufacturing and assembly instructions to FGFT's internal standards.

1.4. Client Needs and Product Specifications

The customer needs and product specifications identified in the Project Definition Report directed and informed the design process and were drawn from the current ladder design from Ziamatic Corp. A general schematic for this design is shown in Figure 1.4. The ladder must provide access to the top of the truck, and current designs use a hinge mechanism to deploy the lower section of the ladder.



Fig. 1.4. Order form schematic showing the access ladder's general profile when deployed [4].

Currently, FGFT uses two main ladder designs, each with its own flaws. Due to the custom nature of the design work done, neither ladder design is particularly well-suited to meet FGFT's needs. For example, some ladders are designed to be supported by the rear bumper step on the fire apparatus, as shown in Figure 1.5. However, not all trucks have this bumper, so the mounting locations for the ladder should be on the body of the truck [2].

A second design flaw in the ladders currently used by FGFT is the ladder's profile when stowed. While the first design issue can be remedied with a ladder designed to be mounted



Fig. 1.5. Access ladder mounted on the step platform at the back of the truck [2].



Fig. 1.6. Access ladder mounted on the wall at the back of the truck.

on the body of the truck, as shown in Figure 1.6, its profile is still too large when stowed [2]. This prevents fire truck components, like the water chute in Figure 1.3, from rotating to both sides of apparatus. Thus, the client needs a design that minimizes the ladder profile to allow the chute and other like components to move freely.

1.4.1. Customer Needs

Following the meeting with FGFT, the design team assessed and reviewed needs. These needs were given identification numbers, then sorted by level of importance and sent to Gordan Draskovic for review and approval. Following his approval of the needs, a categorized needs table, shown in Table I, was created. In the table, the needs are given rankings based on their importance, with 3 indicating a strong need, 2 indicating a moderate need, and 1 indicating a weak need. In the conceptual design screening phase, concepts were evaluated based on how they met the most important needs.

TABLE I.
CUSTOMER NEEDS SORTED INTO CATEGORIES AND GIVEN DEGREES OF IMPORTANCE

Need Category	Need ID #	Need	Importance
Safety	13	The ladder is safe	3
Safety	11	The ladder allows clearance between each step and the body of the fire truck	2
Safety	15	The ladder deploys normally and is safe when icy	3
Safety	4	The ladder provides the user with three points of contact	3
Safety	23	The ladder is safe to hold when heated by the sun	1
Safety	12	The ladder allows visibility of safety signage	1
Cost	21	The ladder can be maintained with readily available tools and supplies	2
Cost	1	The ladder can be manufactured with minimal welding time	2
Cost	2	The ladder cost is affordable	2
Cost	26	The ladder is durable	2
Quality	25	The ladder allows clearance between the ground and the truck when the truck is fully loaded	3
Quality	7	The ladder has clearance between the bottom step and the body of the fire truck	2
Quality	3	The ladder steps support a static load without deformation	2
Quality	8	The ladder has a minimized profile when stowed	3
Quality	19	The ladder can be used in the dark	2
Quality	18	The ladder remains stowed while the fire truck is in motion	3
Quality	20	The ladder is aesthetically pleasing	1
Quality	16	The ladder operates normally when cold	1
Quality	17	The ladder operates normally when hot	1
Quality	22	The ladder is warm to the touch in cold weather	1
Quality	10	The ladder is usable by a firefighter in full gear	2
Morale	9	The ladder allows comfortable climbing	2
Morale	5	The ladder can be deployed quickly	1
Efficiency	24	The ladder can be deployed and stowed by one person	1
Robustness	14	The ladder can be placed on a variety of fire truck models	3
Robustness	6	The ladder can be stepped onto from the ground	2

The most important needs are listed here:

1. The ladder is safe (#13);
2. The ladder deploys normally and is safe when icy (#15);
3. The ladder provides the user with three points of contact (#4);
4. The ladder allows clearance between the ground and the truck when the truck is fully loaded (#25);
5. The ladder has a minimized profile when stowed (#8);
6. The ladder remains stowed when the fire truck is in motion (#18);
7. The ladder can be placed on a variety of fire truck models (#14)

Needs 13, 15, and 4 all relate to ladder-user safety. Need 13 is a general safety need for normal operating conditions; need 15 extends on need 13 for operation in icy conditions, which can be expected since the access ladders will be exposed to water when fighting fires. It is safe to assume that the ladder will get wet and icy if used in sub-zero conditions.

Need 4 is derived from the NFPA standard which dictates that all ladders allow the user to maintain three points of contact with the ladder while climbing. This means there must be some form of handrail or handhold incorporated into the design.

Need 25 is also adapted from the NFPA standard: when fully loaded, the ladder must be at least 10 inches from the ground. Need 8 and 14 are customer specific needs and are drawn directly from the problem statement. Lastly, Need 18 was determined by the design team. The ladder should not deploy while the fire truck is driving as this may cause damage to the apparatus or other vehicles and will be inconvenient to the fire crew as they would need to pull over and stow the ladder.

1.4.2. Product Specifications and Metrics

After identifying customer needs, a set of product specifications with associated metrics was determined. These product specifications can be used to quantifiably determine that the customer needs have been met. The specifications are shown in Table II. The relationships between needs and specifications were then used to prepare a House of Quality **(HOQ)** with the current ladder design as the primary benchmark. The HOQ is shown in Appendix B.

TABLE II.
PRODUCT SPECIFICATIONS WITH CORRESPONDING METRICS

Metric #	Need #(s)	Metric	Units	Marginal Value	Ideal Value
1	1	Welding time in manufacture	min	<5	0
2	2	Unit manufacturing cost (includes labour)	$	1200-1500	1200
3	3	Static load is supported	lb	1000	1000
4	3	No deformation in the step when static load is applied	in	0	0
5	4	Three stable points of contact are available at any point when using the ladder	Binary	Pass	Pass
6	5	Motion required to open the ladder	Discrete motions	<=4	1
7	5	Time required to open the ladder	min	<=10	<=5
8	6, 25	Vertical distance between bottom step and ground	in	10-24	18
9	7	Horizontal distance between leading edge of bottom step and body of fire truck	in	>=18	18
10	8	Horizontal distance between body of fire truck and furthest ladder component when stowed	in	<8	<4
11	9	Vertical distance between any two steps on the ladder (excluding ground to bottom)	in	<=18	
12	9	Vertical and horizontal distance between any set of two consecutive steps is equal	Binary	Pass	Pass
13	14	The ladder is supported excusively by the wall of the fire apparatus	Binary	Pass	Pass
14	11	Horizontal distance between leading edge of each step (excluding bottom) and body of fire truck	in	>=8	
15	12	Safety sign FAMA23 is visible when the ladder is installed on a fire truck	Binary	Pass	Pass
16	13, 15	Slip resistance on steps in any orientation when tested wet using the English XL tester	-	>0.68	>0.75

TABLE II.
(CONTINUED)

Metric #	Need #(s)	Metric	Units	Marginal Value	Ideal Value
17	14	Time to modify ladder design for different fire trucks	min	20	10
18	15	Components are not affected by ice buildup	Binary	Pass	Pass
19	16, 17	Temperature range of normal ladder operation	°F	-53 to 98	-58 to 104
20	26	The ladder components do not galvanically corrode	Binary	Pass	Pass
21	18	Jolting of the fire truck in transit will not cause the ladder to dislodge	Binary	Pass	Pass
22	19	The ladder steps are visible when the surrounding environment is dark	Binary	Pass	Pass
23	18	Indicator light in the cab indicates when the ladder is deployed	Binary	Pass	Pass
24	13, 15	Slip-resistant handrail	Binary	Pass	Pass
25	26	Non-corrosive material on the handrail	Binary	Pass	Pass
26	4	Handrail diameter	in	1-1.625	1.25
27	4	Clearance between handrail and any other surface	in	>2	3
28	20	Aesthetically pleasing	Subjective		
29	13	User is protected from sharp edges in normal operation	Binary	Pass	Pass
30	13	In normal operation, user is protected from pinch points	Binary	Pass	Pass
31	9	Ladder angle relative to fire truck body	Degrees	70-80	75
32	9	Horizontal distance between any two consecutive steps	in	<=18	3
33	21	Standard nuts and lubricants used	Binary	Pass	Pass
34	22	Handrail can be held in cold weather	Binary	Pass	Pass
35	23	Handrail surface temperature when heated by the sun	°F	<104	<100
36	23	Ladder surface temperature (and other components, excluding handrail) when heated by the sun	°F	<122	<116
37	24	Bottom step weight (below lower hinge)	lb	<40	<20
38	26	Ladder life before replacement	years	8	12

2. Conceptual Design and Concept Selection

The benchmark for the ladder design process is the range of current products used by FGFT. The conceptual design process was focused on developing designs for the upper and lower sections of the ladder which would be compatible with each other and provide a better alternative than the benchmark.

2.1. Design Benchmark

Various ladder designs are available for purchase from Ziamatic, but the one shown in Figure 2.1 and Figure 2.2 consists of a round tube frame with a hinge mechanism on the bottom mount and a pivot point near the top mount. The other designs from Ziamatic are similar to the one shown in Figure 2.1 and Figure 2.2.



Fig. 2.1. Benchmark ladder showing the lower section hinge mount.



Fig. 2.2. Benchmark ladder showing the upper section hinge mount.

The ladder does not stow close enough to the body of the truck, which causes a clearance

issue with components on certain fire truck apparatuses. Ziamatic was contacted regarding the life expectancy of the ladders it provides to FGFT. The ladders have an average expectancy of six to seven years but factors such as salt erosion from roads, environmental conditions, and maintenance scheduling affect that number [5]. This information was used as a benchmark for generating conceptual ladder designs.

In the conceptual design process, the upper and lower ladder section concepts were developed independently. The mechanism by which the design will be made adjustable for the range of custom fire truck designs was not considered in the conceptual design phase, and is addressed in Section 3.3.

2.2. Patent Search

The research conducted was focused on reviewing existing patents for ladder designs and products. While the client did not expect patents to impose a constraint on the design process, the team identified existing products to avoid copyright infringement.

2.2.1. Folding Ladder

Patent CA 2457305 A1 is for a generic mounting folding ladder. The deployed and stowed schematics for the Folding Ladder for Concrete Mixer Truck are shown in Figure 2.3 and Figure 2.4.

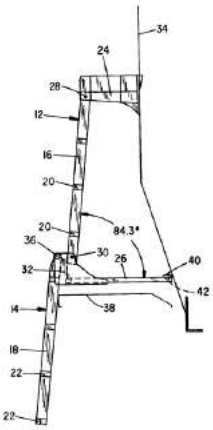

Fig. 2.3. Deployed folding ladder for concrete mixer truck schematic [6].

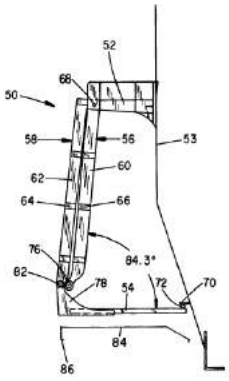

Fig. 2.4. Stowed folding ladder for concrete mixer truck schematic [6].

In the patent abstract, the design is described as "a two-section folding ladder assembly disclosed secured to a pair of spaced platforms including an upper platform and a lower platform fixed to the truck" [6]. The patent also specifies the method of attaching the ladder to the body of the vehicle.

As shown in Figure 2.3, the ladder has a pivot point on the bottom ladder mount which supports the lower ladder section. In turn, the lower ladder section provides access to the upper ladder section from the ground. When stowed, the lower ladder section rotates upward and latches onto the upper ladder section, which is in a fixed position. Both ladder sections are of similar size.

Patent CA 2457305 A1 states the use of the ladder is specifically for a concrete mixer truck, and is also very broad, given that ladders are commonly supported by two points of contact. Thus, it was determined that any design selected for FGFT would not infringe on the patent.

2.2.2. Ladder Accessories

Patent CA 2465252 A1 was found when searching for ladder hinges and pivot points. The hinge and locking assembly shown in Figure 2.5 inspired some of the conceptual designs to be discussed in Section 2.3. Ideally, any hinges used will be sourced by the design team, but if they cannot, knowledge of this patent will help ensure there is no patent infringement.

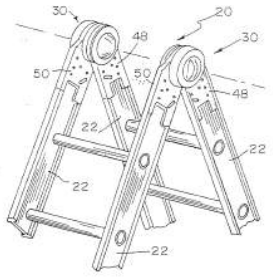

Fig. 2.5. Hinge and locking assembly patent [7].

The patent describes a folding A-frame ladder that can pivot to become an extension ladder. The middle hinge has a locking mechanism capable of releasing and reengaging at various positions [7].

If the required parts and hardware cannot be sourced appropriately, further research of patents will be conducted to confirm that custom designed parts do not infringe.

2.3. Upper Ladder Section Concepts

Seven concepts were developed for the upper section of the ladder and are presented in Table III.

TABLE III.
CONCEPTUAL DESIGNS FOR THE UPPER LADDER SECTION

#	Concept Sketch	Description
1	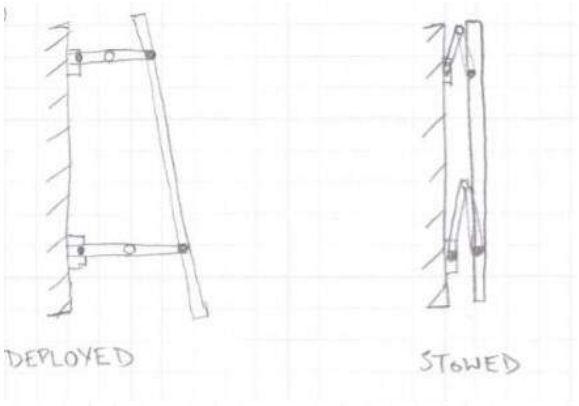	Two A-frame hinges are used to secure the upper ladder section to the body.
2	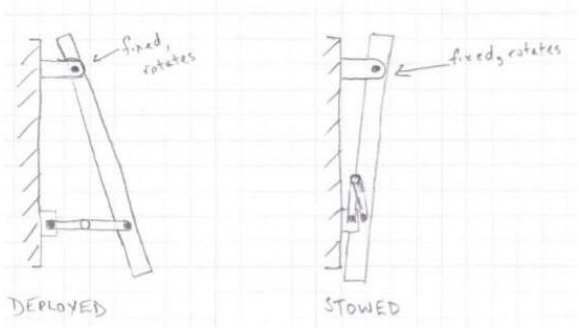	A fixed support with a hinge point supports the top of the ladder and an A-frame hinge supports the bottom.

TABLE III.
(CONTINUED)

#	Concept Sketch	Description
3	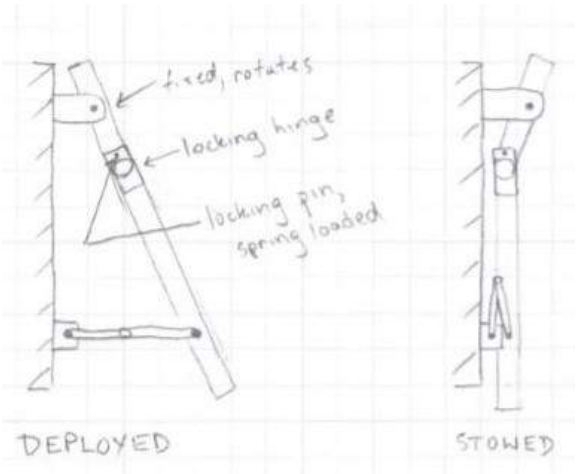	A fixed support with a hinge point supports the top of the ladder and an A-frame hinge supports the bottom. The ladder has a hinge point halfway up which decreases the stowed profile size.
4	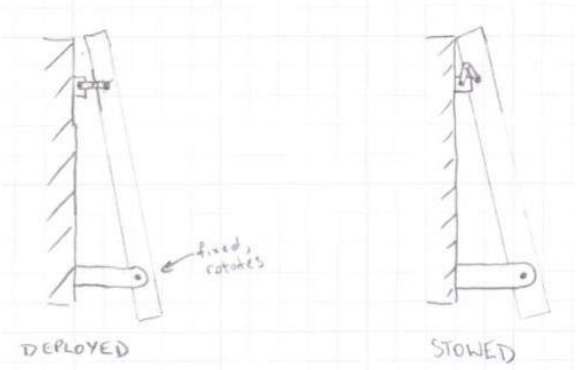	An A-frame hinge supports the top of the ladder and a fixed support with a hinge point supports the bottom.
5	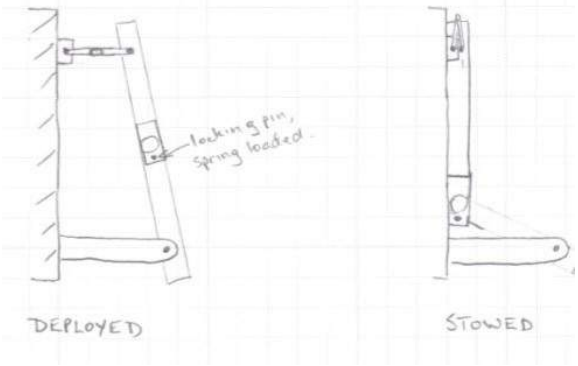	An A-frame hinge supports the top of the ladder and a fixed support with a hinge point supports the bottom. The ladder has a hinge point halfway up which decreases the stowed profile size.

TABLE III.
(CONTINUED)

#	Concept Sketch	Description
6	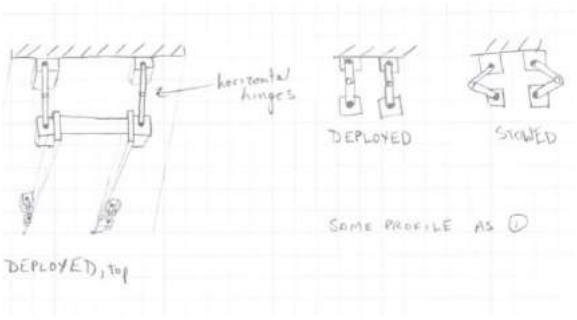	Similar to concept 1, but horizontal A-frame hinges are used to support the top and bottom of the ladder. The hinges will need to be angled to allow the ladder to be deployed at a 75° angle.
7	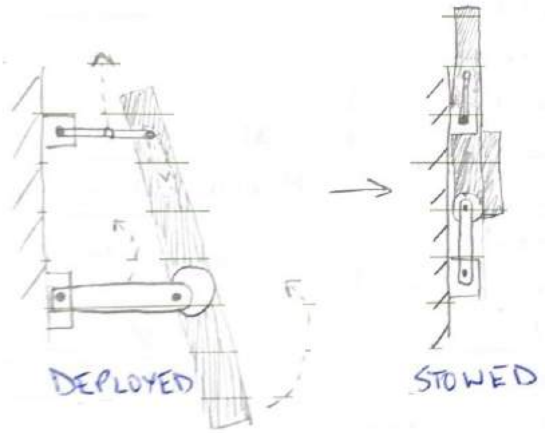	An A-frame hinge supports the top of the ladder, with the ladder hinge in a linear slot. A rotating hinge joint supports the bottom of the ladder. The linear slot will be necessary due to the geometries of the A-frame and rotating joint.

2.3.1. Preliminary Evaluation

Preliminary evaluation of the upper concepts was performed to give a qualitative sense of how they would perform relative to one another.

Upper Concept 1

Upper concept **(UC)** 1 allows the ladder to collapse close to the body, and will likely have the lowest cost to implement. However, it may be difficult to operate the upper hinge for deployment. It is also difficult to maintain since there are several moving parts.

Upper Concept 2

UC 2 will be easy to stow since only one hinge needs to be collapsed. However, it will not stow as close to the body as UC 1.

Upper Concept 3

UC 3 can be stowed close to the body, but uses a more complicated mechanism which will result in an increased cost. There will be more maintenance required due to the number of moving parts.

Upper Concept 4

UC 4 will be easy to stow, like UC 2. However, it will not stow as close to the body as UC 2. Furthermore, the A-frame hinge on the top of the ladder may be difficult to reach in the event of a jam.

Upper Concept 5

UC 5 allows the ladder to be stowed close to the body, like UC 3. The lower support may also be used to attach the lower section of the ladder. However, this concept will likely have a high cost, and require more maintenance.

Upper Concept 6

UC 6 allows the ladder to collapse close to the body, like UC 1. However, the design of the horizontal hinges will be complicated and the implementation will incur high costs. It will be difficult to maintain due to the number of moving parts.

Upper Concept 7

UC 7 will allow the ladder to be stowed close to the body. However, due to the rotation of the bottom joint, a portion of the ladder will be taller than the body of the truck, which is undesirable.

2.4. Upper Section Concept Screening and Scoring

The upper ladder conceptual designs were differentiated by their method of connecting the ladder to the body of the truck. Evaluation criteria, based on the client needs and product specifications outlined in Section 1, were generated to select two concepts which were evaluated by FGFT. The final selection is detailed in Section 2.5. These are similar to the needs entered in the HOQ, but were simplified to be better suit the quick concept screening and scoring processes. Furthermore, many of the concepts generated met the needs outlined in the HOQ. For example, it was assumed that every design is capable of meeting the safety needs. Thus, additional criteria were required to select between concepts.

1. Modularity of the concept — how easily the concept can be adjusted for various custom fire trucks;
2. Stowed profile size — the space the ladder will take up when stowed;
3. Ease of use — ladder deployment speed;
4. Ease of maintenance — how frequently the ladder would have to be maintained and ease of maintenance;
5. Ease of locking in place — number of motions required to securely deploy the ladder;
6. Simplicity — how simple the design is.

Some of the criteria are interrelated; in general, a ladder that is easier to use is also easier to securely deploy, and will also be a more simplistic design. Furthermore, a simpler design will likely be easier to maintain as there are likely to be fewer dynamic components which require lubrication. A simpler design will also likely be easier to make adjustable.

All seven concepts were screened at a high level to eliminate those which were infeasible to pursue. Then, a weighted selection matrix was used to select two concepts for further evaluation.

2.4.1. Concept Screening

In the screening process, concept 1 was chosen as a reference against which the other concepts were compared. Each of the other six concepts was evaluated using the six criteria

detailed above. For each criterion, a value of -1 was assigned if the concept was deemed to be inferior to the reference concept; a value of 0 was assigned if the concept was deemed to be equivalent to the reference concept; and a value of 1 was assigned if the concept was deemed to be superior to the reference concept. Since concept 1 was the reference concept, it was given a score of 0 for each criterion. The screening score for each concept was then used to determine if the concept should be carried through to the scoring process. The results of the screening process are shown in Table IV.

TABLE IV.
CONCEPT SCREENING TABLE

	Concept Number						
Selection Criteria	**1**	**2**	**3**	**4**	**5**	**6**	**7**
Modularity	0	1	0	0	1	0	-1
Stowed Profile Size	0	-1	1	-1	0	0	1
Ease of Use	0	1	-1	0	-1	-1	-1
Ease of Maintenance	0	1	0	1	0	0	-1
Ease to Lock in Place	0	0	1	0	1	0	1
Simplicity	0	1	0	1	0	-1	-1
Total	0	3	1	1	1	-2	-2
Rank	5	1	2	2	2	6	7
Pursue?	No	Yes	Yes	Yes	Yes	No	No

Concept 2 received the highest screening score of 3, and concepts 3, 4, and 5 all received the next highest score of 1. Thus, the four concepts were all carried through to the concept scoring process.

2.4.2. Criteria Weighting

To develop a weighted selection matrix, the criteria were ranked against all the others to determine their relative importance with one another. The criteria weighting matrix is shown in Table V, where the criterion in each row is compared with the other criteria individually.

In each comparison, the letter associated with the criterion deemed to be more important was entered into the cell. The number of occurrences in the table for each criterion was divided by the total number of occurrences in the table, providing a starting weight for each criterion. However, since ease of maintenance was never selected as the more important criterion, the weights were adjusted to give the criterion some influence on the selection.

TABLE V.
CRITERIA WEIGHTING MATRIX

	A	**B**	**C**	**D**	**E**	**F**
Modularity (A)	———	B	A	A	A	A
Stowed Profile Size (B)	———	———	B	B	B	B
Ease of Use (C)	———	———	———	C	C	C
Ease of Maintenance (D)	———	———	———	———	E	F
Ease to Lock in Place (E)	———	———	———	———	———	E
Simplicity (F)	———	———	———	———	———	———
Total Occurrences	4	5	3	0	2	1
Weight	0.2667	0.3333	0.2000	0.0000	0.1333	0.0667
Adjusted Weight	0.264	0.329	0.2	0.01	0.131	0.066

Thus, it was given an adjusted weight of 0.01 by slightly decreasing the weights of the other criteria.

2.4.3. Concept Scoring

The four concepts to make it past the preliminary screening were then compared against each other using the same criteria as before. The best concept for each category was given a score of 4, the second best was given a score of 3, the third best was given a score of 2, and the fourth best was given a score of 1. If ever there were two concepts deemed to be equivalent at satisfying a given criterion, they were give the same score. The results of the concept scoring process are shown in Table VI.

TABLE VI.
RANKING OF SCREENED CONCEPTS

	Rank by Concept Number			
Selection Criteria	**2**	**3**	**4**	**5**
Modularity	4	2	2	4
Stowed Profile Size	2	4	1	3
Ease of Use	4	3	2	1
Ease of Maintenance	4	2	3	1
Ease to Lock in Place	2	4	1	3
Simplicity	4	2	4	2

Then, using the weights determined in Table V, weighted scores were given to each of the four concepts. The weighted scores are shown in Table VII. Since the weighted scores for concept 2 and concept 3 were 0.04 points apart, both were selected for further comparison.

TABLE VII.
WEIGHTED SCORING OF SCREENED CONCEPTS

		Concept Number							
		2		**3**		**4**		**5**	
Selection Criteria	**Weight**	**Rank**	**Score**	**Rank**	**Score**	**Rank**	**Score**	**Rank**	**Score**
Modularity	0.264	4	1.056	2	0.528	2	0.528	4	1.056
Stowed Profile Size	0.329	2	0.658	4	1.316	1	0.329	3	0.987
Ease of Use	0.2	4	0.8	3	0.6	2	0.4	1	0.2
Ease of Maintenance	0.01	4	0.04	2	0.02	3	0.03	1	0.01
Ease to Lock in Place	0.131	2	0.262	4	0.524	1	0.131	3	0.393
Simplicity	0.066	4	0.264	2	0.132	4	0.264	2	0.132
Total	1		**3.08**		**3.12**		1.682		2.778

2.5. Upper Ladder Section Selection

The client was consulted to select between UC 2 and UC 3, since their weighted scores were very close. Gordan recommended that Upper Concept 2 be designed in detail based on its improved simplicity and ease of making it safe for the user. Additionally, he specified that a top platform attached to the upper ladder section be positioned above the top ladder hinge and a gas strut be implemented to lock the ladder in position and facilitate deployment. The top platform is added to the design in Figure 2.6, and the recommendation will be incorporated in the detailed design phase. A suitable gas strut will also be selected for the detailed design.

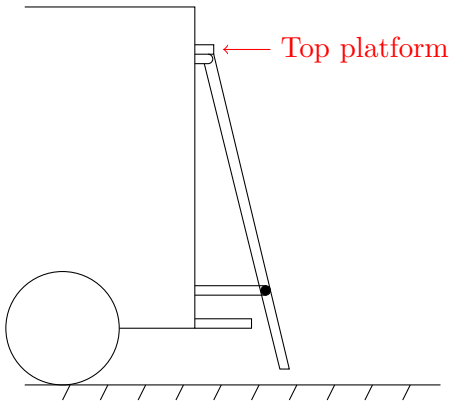

Fig. 2.6. Concept recommended by FGFT in which a top platform is placed above the top ladder hinge.

2.6. Lower Ladder Section Conceptual Design and Selection

Three concepts were developed for the lower section of the ladder and are presented in Table VIII.

TABLE VIII.
CONCEPTUAL DESIGNS FOR THE LOWER LADDER SECTION

#	Concept Sketch	Description
1	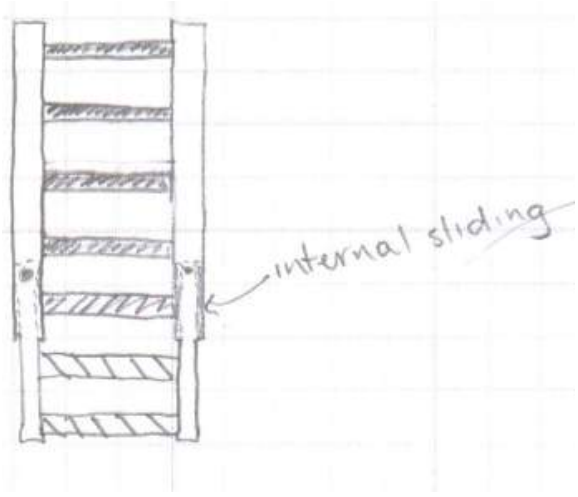	Sliding lower section internally-positioned relative to the upper section.

TABLE VIII.
(CONTINUED)

#	Concept Sketch	Description
2	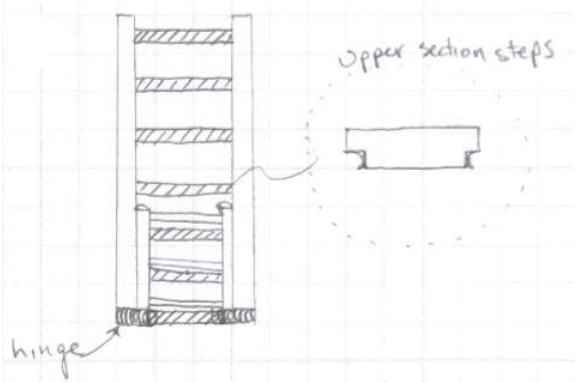	Lower section hinges at the bottom of the upper section. The lower section nests within the upper section.
3	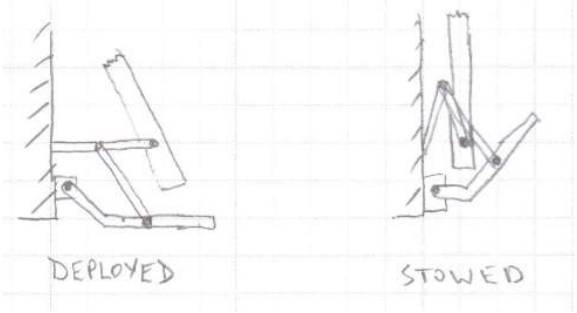	The lower and outer sections are disconnected here. The lower section consists of a single step that deploys via a linkage mechanism with the upper section.

2.6.1. Lower Concept Evalutation

Preliminary evaluation was done on the three lower section concepts.

Lower Concept 1

Lower concept **(LC)** 1 provides a reduced stowed profile size since the lower section will be contained within the upper section. However, this design was determined to be infeasible due to the high manufacturing cost associated with the internal sliding mechanism. Additionally, the sliding ladder presents a large pinch point, which is undesirable.

Lower Concept 2

LC 2 will have a larger stowed profile size than LC 1, but is a good option since the lower section can be nested within the upper section. The design allows for quick deployment

and the only pinch point is located at the hinge joint. It also allows for more than one step to be placed on the lower section if necessary.

Lower Concept 3

LC 3 was deemed to be infeasible due to the number of welds required to create the linkage mechanism. Furthermore, its profile when stowed would likely be less desirable than the stowed profile for LC 2.

2.6.2. Lower Concept Selection

Based on the preliminary evaluations of the lower concepts, the team felt comfortable selecting LC 2 as the conceptual design for the lower section, without the need for further screening and scoring. The simple mechanism will allow it to be manufactured at a low cost. In Section 3, options for controlling the lower ladder section's deployment will be explored. Furthermore, the attachment method between upper and lower sections will be specified.

3. Detailed Design

Having selected a conceptual design in Section 2, detailed design work is done to prepare a suitable design for FGFT. The overall structure of the ladder's upper and lower sections will be determined first, then the parametric relationships used to determine step spacing will be determined. Lastly, any hinges, latches, bushings, and steps used in the design will be determined. Note that the connection of the ladder to the body of the truck is outside of the project scope and will therefore not be considered in this report.

Ladder materials are selected by availability, cost, and properties. The aluminum used is 6061-T6 and the steel used is ASTM A36 Hot Rolled Steel **(HRS)**. The aluminum has a yield strength of 276 MPa (40,000 psi) at 24 °C, 262 MPa (38,000 psi) at 100 °C (212 °F), and 290 MPa (42,100 psi) at -80 °C (-112 °F) [8]. The steel has a yield strength of 250 MPa (36,300 psi) [9].

A button sensor can be incorporated in the design to detect whether the ladder is deployed or stowed and send the information to the cab of the truck.

3.1. Upper Ladder Section Design

The SolidWorks model of the ladder is shown deployed in Figure 3.1 and stowed in Figure 3.2. The ladder is fixed to the wall by two pivot points on fixed support brackets at the top of the upper section and two pivot points on A-frame hinges attachet to fixed support brackets at the bottom of the upper section.

The top connection points allow the ladder to rotate but do not move themselves, which keeps the ladder secure while still allowing it to rotate for deployment. The bottom connection points also allow the ladder to rotate, while the A-frame allows the ladder to translate horizontally to move closer or further away from the wall.



Fig. 3.1. Upper ladder section, shown deployed.



Fig. 3.2. Upper ladder section, shown stowed.

3.1.1. Ladder Runners and Steps

The two runners are 0.50” thick aluminum flat bar spaced 15” apart horizontally and connected by the steps of the ladder. The flat bars are 4” wide and their length depends on the required ladder height. Each step is connected to the runners by two 0.25” diameter Grade 8 stainless steel bolts on each side. The steps used are sourced from Cast Products Inc., as recommended by FGFT; the step models have been provided and are used with permission in Figure 3.1, Figure 3.2, Figure 3.3, and Figure 3.6. The bolt connection between the ladder runner and the step can be seen in Figure 3.3.

The steps in the upper section are 1.5” thick, 15” wide, and 3.8” deep [10]. The step schematic is shown in Figure 3.4. This step was chosen for the upper section since a slightly smaller step is available for the lower section, allowing the lower section to nest in the upper section and reduce the overall ladder profile when stowed.

The step used has a corrugated surface on the top face, which provides sufficient slip-resistance. It is also rated for the required 500 lb static load it must support. While the step material is not known, it is assumed that it will not pose any galvanic corrosion issues.

3.1.2. Support Joints

The top support point is 0.5” thick laser-cut steel with a bent flange to mount the ladder on the body of the truck, as shown in Figure 3.5. Four 0.41” holes are drilled through the

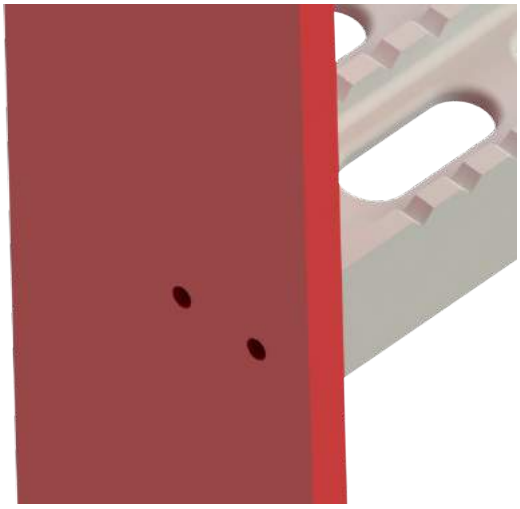

Fig. 3.3. Connection point between the upper ladder runner and step.

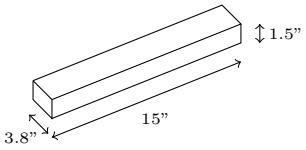

Fig. 3.4. Schematic showing upper section step dimensions.

steel to connect the bracket to the truck, and one 0.53” hole is drilled through the steel to act as the upper hinge support for the ladder. Note that the diameter of this hole may change depending on the bearings selected.

The ladder is joined to the top hinge supports using 0.5” Grade 8 stainless steel bolts housed in nylon 6-6 bearings supplied by Steeves Agencies. The bearings are 1” thick, with inner diameters **(ID)** of 0.5” and outer diameters **(OD)** of 0.53”. The ladder extends slightly above the top hinge points, where it is connected to two steps positioned horizontally to form the top platform, as shown in Figure 3.6.

The 8” deep platform at the top of the upper section is formed by bolting two 4” steps edge to edge using the 0.25” bolts as specified previously. The two steps are joined by an 8”x1.5” long flat bar which is bolted at a variable angle to the ladder and supported with stitch welding, as will be discussed in Section 5.

The bottom support point is 3/8” thick laser cut steel with a bent flange to mount the ladder to the body of the truck. Two 0.41” holes are cut through the steel to connect the

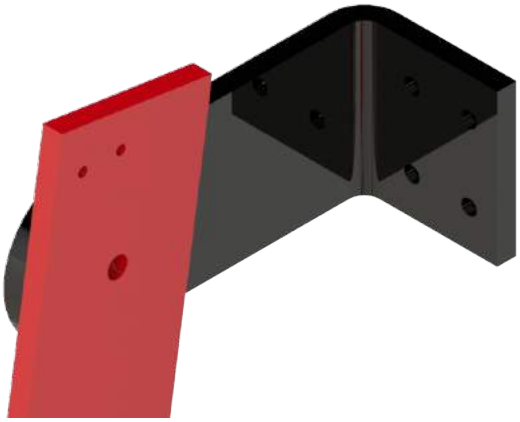

Fig. 3.5. View of upper connection bracket.



Fig. 3.6. Isometric view of the top hinge point and platform.

bracket to the body of the truck, and one 0.53" hole is cut through the steel to connect the A-frame hinge to the bottom support point, as shown in Figure 3.7.



Fig. 3.7. A-frame hinge and lower bracket.

The two links in the A-frame hinge are both 0.25" thick laser cut steel with two 0.53" holes cut through at either end. The links are joined together by 0.5" Grade 8 stainless steel bolts housed in 0.625" thick nylon bearings with ID of 0.5" and OD of 0.53". The links are joined laterally by welding a 0.1875" thick support bracket between the A-frame links closer to the body. This bracket prevents relative motion between the two A-frame hinges as the ladder deploys. A gas strut is attached between a pivoting ball on the support

bracket and the body of the truck, and provides additional propulsion to facilitate ladder deployment. The gas strut used is small and is corrosion resistant; details can be found in Section 3.4.2.

The ladder is joined to the lower hinge points using 0.5" Grade 8 stainless steel bolts housed in nylon bearings. The bearings are 1" thick, with ID of 0.5" and 0.53" OD. Located on each runner between the A-frame and the ladder runner is the steel upper-lower connection bracket which is used to connect the upper and lower sections. The bracket has six holes drilled through it:

- 2×0.27" diameter holes with 0.51" diameter countersinks at the top of the bracket;
- 2×0.28" diameter holes at the bottom of the bracket;
- 2×0.53" diameter hole, one in the centre of the bracket and one offset from the centre;

The bracket is attached to the upper section runner in four places using 0.25" Grade 8 stainless steel bolts. Two of the holes in the upper-lower connection are counter-sunk to provide clearance for the range of motion of the A-frame hinge. The centre 0.53" hole in the bracket is used to connect the A-frame hinge to the runner, and the offset 0.53" hole is the hinge for the lower ladder section. Models showing one side of the bracket and its connections to the upper and lower runners are shown in Figure 3.8 and Figure 3.9.



Fig. 3.8. Upper-lower connection bracket attachment to the upper runner.

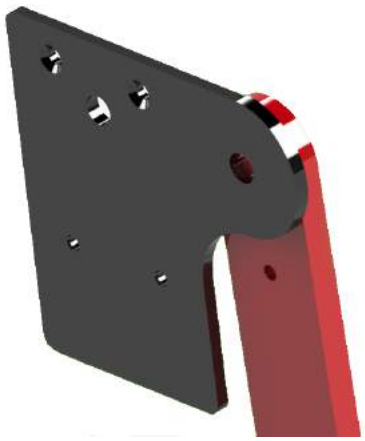

Fig. 3.9. Upper-lower connection bracket attachment to the lower runner.

3.2. Lower Ladder Section Design

The lower ladder section will always be shorter than the upper ladder section. It connects to the upper section via a hinge joint placed on a bracket near the base of the upper ladder. A model of the lower ladder section is shown in Figure 3.10.



Fig. 3.10. Isometric view of the lower ladder section, deployed.

The lower section runners are connected to their respective brackets with 0.5" diameter Grade 8 stainless steel bolts housed in nylon bearings 0.75" thick, with 0.5" ID and 0.53" OD. The ladder itself is located between the two connection brackets, as shown in Figure 3.9.

A spring is connected on both sides of the ladder between the A-frame hinge point on the upper-lower connection bracket and the point just below the mounting hole of the lower section ladder. The two springs apply a force to the lower section ladder to hold it in place in either the stowed or deployed position, as desired. Details on the spring can be found in Section 3.4.3.

A rubber bumper should be placed at the bottom of upper ladder section's runner to provide support to prevent the upper and lower sections' runners from contacting each

other. The steel mounting plate has been designed to accomodate the space required for this feature.

3.2.1. Ladder Runners and Steps

The lower section runners are 0.5” thick, 2” thick flat bar aluminum. The length of the flat bar varies depending on the required length of the lower ladder section. The lower section runners are 15” apart and are connected by the lower section steps.

Each step is connected to the runner on either side by two 0.25” Grade 8 stainless steel bolts. The connection point from runner to step is shown in Figure 3.11.

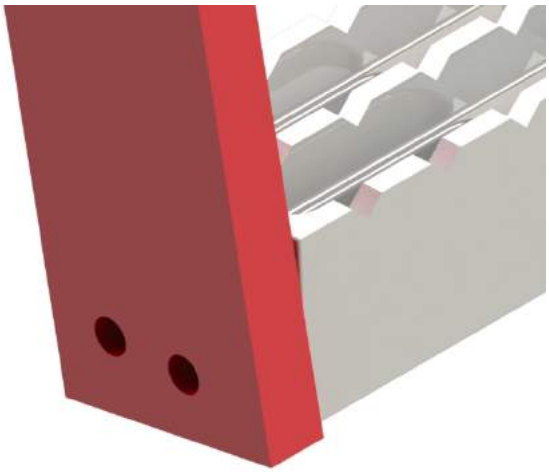

Fig. 3.11. Connection point between the lower section runner and step.

The lower section steps are also sourced from Cast Products Inc. and the solid model is used with permission in Figure 3.10 and Figure 3.11. The steps are 15” wide, 2” deep, and 1.5” thick [10], and allow the lower section to nest within the upper section due to their smaller depth when compared with the upper section steps. A schematic of the lower step is shown in Figure 3.12.

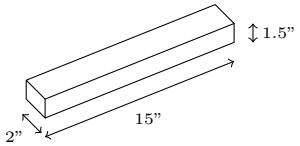

Fig. 3.12. Schematic showing lower section step dimensions.

3.3. Design for Modularity

A key design need is that the ladder design can be quickly adjusted for various fire truck designs. The dimensions involved in the design were set as variables due to the varying truck geometries, and Figure 3.13 provides a schematic of the design variables. Using the variables and the provided Excel Geometry calculator, shown in Appendix C, a designer can calculate four values to input as global variables in the SolidWorks Master file to change the ladder geometry. The four global variables to be calculated are the nummber of steps, N, the spacing between steps (measured along the runner), R_L, and the lengths of the flat bars needs for the upper and lower sections — L_2 and L_1.

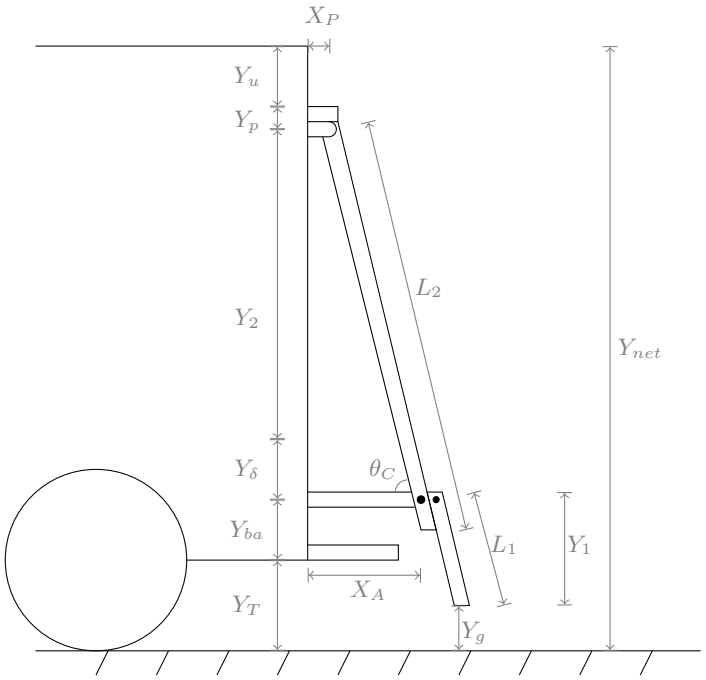

Fig. 3.13. Schematic showing the modular design variables.

Some of the variables have assumed default values. Y_g has a default value of 5" to ensure the ladder has enough vertical clearance from the ground; Y_{ba} has a default value of 12" to allow the ladder to clear the rear bumper step; Y_δ has a default value of 4" so a ladder step is not placed alongside the hinge point; Y_u has a default value of 8" as specified by the client. Other design variables are not shown in the schematic, but are presented alongside the schematic variables in Table IX.

TABLE IX.
VARIABLES USED IN MODULAR DESIGN

Variable	Description	Default Value
R	Vertical distance between tops of consecutive ladder steps	N/A
n_u	Number of steps in the ladder upper section	N/A
n_l	Number of steps in the lower ladder section	N/A
n	Total number of steps	N/A
Y_1	Vertical distance spanned by the lower ladder section	N/A
Y_2	Vertical distance spanned by the upper ladder section	N/A
θ_c	Climbing angle	N/A
Y_T	Vertical distance from the ground to the bottom of the truck	N/A
Y_{ba}	Vertical distance from the bottom of the truck to the vertical centre of the A-frame	12”
Y_δ	Vertical distance between Y_1 and Y_2	4”
Y_g	Preliminary vertical distance from the ground to the bottom of the lower ladder section	5”
Y_u	Vertical distance from the top platform to the top of the truck	8”
Y_p	Vertical distance between the centre of the top pivot point and the top of the platform	3.72”
Y_{net}	Total vertical climbing distance	N/A
X_A	Horizontal distance measured from the body to the centre point of the lower hinge point	19.625”
X_P	Horizontal distance measured from the body to the centre point of the upper hinge point	7.5”
L_1	Length of the lower section measured along the ladder	N/A
L_2	Length of the upper section measured along the ladder	N/A

3.3.1. Ladder Adjustment Equations

The ladder can be adjusted for any truck with $Y_{net} \geq 41''$. To start, two variables must first be known: Y_{net} and Y_T. Then, Y_1 and Y_2 can be calculated using Equation 3.1 and Equation 3.2 respectively.

$$Y_1 = Y_T + Y_{ba} - Y_g \tag{3.1}$$

$$Y_2 = Y_{net} - Y_u - Y_\delta - Y_{ba} - Y_T - Y_p \tag{3.2}$$

After calculating the vertical space occupied by the two ladder sections, the vertical locations of the steps can be determined. The convention is to measure from the ground

to the top of each individual step. First, the number of steps in the upper section n_u is selected so the spacing R between consecutive steps is between 12" and 18":

$$n_u = \begin{cases} 2 \text{ for } 24 \leq Y_2 \leq 36, \\ 3 \text{ for } 36 < Y_2 \leq 54, \\ 4 \text{ for } 54 < Y_2 \leq 72, \\ 5 \text{ for } 72 < Y_2 \end{cases} \tag{3.3}$$

Then, the vertical position y_u of the uth step in the upper section can be calculated by:

$$y_u = Y_1 + Y_g + Y_\delta + uR \tag{3.4}$$

Where u is the upper step number, and $0 \leq u \leq n_u$, so the first step in the upper section has $u = 0$. Note that the n_u^{th} step is also considered to be the top platform (above the hinge). The vertical position of the first step is denoted y_0 and the vertical position of the highest step is denoted y_{n_u}.

The spacing of steps in the lower ladder section is also R, and the number of lower section steps is calculated by:

$$n_l = \frac{Y_1}{R} \tag{3.5}$$

In the case the value calculated using Equation 3.5 is a decimal, it will be rounded down to the next nearest integer. The total number of steps N is calculated by:

$$N = n_u + n_l \tag{3.6}$$

Then, the vertical position y_l of the lth lower ladder section step can be calculated by:

$$y_l = Y_g + Y_\delta + Y_1 - lR \tag{3.7}$$

Where l is the lower step number, and $1 \leq l \leq n_l$, so the highest step in the lower section has $l = 1$. The vertical position of the highest lower step is denoted y_1 and the position of the lowest lower step (the closest to the ground) is denoted y_{n_l}.

The climbing angle θ_c will change depending on the required length of the ladder. Forming a triangle between Y_2 and the distance between pivot points in the ladders' upper section as shown in Figure 3.14, θ_c can be calculated.

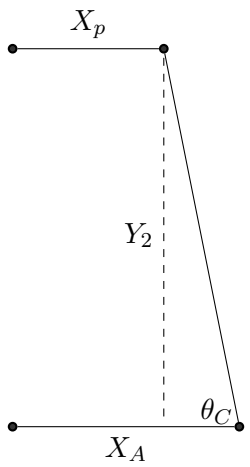

Fig. 3.14. Geometry used to solve for the climbing angle θ_C.

The A-frame length in the horizontal position X_A is constant, as is the horizontal distance between the body of the truck and the top pivot point X_P, so θ_c will change according to the value of Y_2:

$$\theta_c = \arctan\left(\frac{Y_2}{X_A - X_P}\right) \tag{3.8}$$

The denominator has a value of $X_A - X_P = 19.625 - 7.5 = 12.125$. The steps are attached to the runners of the ladder in a linear pattern as specified in Section 3.3.2. Knowing the climb angle, the designer can calculate the remaining values to input to the SolidWorks Master file.

First, the distance along the runners between steps is calculated by:

$$R_L = \frac{R}{\sin\theta_C} \tag{3.9}$$

Then, the length of the upper section's flat bar is calculated by:

$$L_2 = \frac{Y_2}{\sin\theta_C} + 4 + 3.5 \tag{3.10}$$

Where the constants 4 and 3.5 are based on the geometry of the upper section flat bar. The length of the lower section's flat bar is calculated slightly differently. The originally calculated value of Y_1 can cause the lower section to be longer than necessary, so it should be recalculated:

$$Y_{1,actual} = Y_T + Y_\delta - y_{n_l} + 1.5 + 3.25 \sin(90 - \theta_C) + 1 \sin\theta_C + 3.5 \tag{3.11}$$

Where the constant 1.5 is the thickness of the lower section steps, 3.25 is the centre to centre distance between the two hinge points in the upper-lower connection bracket, and 1 and 3.5 are based on the geometry of the flat bar. Then, the length of the lower section bracket is calculated as:

$$L_1 = \frac{Y_{1,actual}}{\sin\theta_C} \tag{3.12}$$

More details on these calculations can be found in Appendix C

3.3.2. Adjusting the Design

The SolidWorks Master file can be used to quickly change the geometry of the ladder in conjunction with the Excel Geometry calculator. From the Master file, a secondary assembly file is generated which can be used to develop the manufacturing and assembly drawings.

The Master file is a SolidWorks assembly file in which all the individual components' part files are imported and mated appropriately to form the ladder in its deployed position. The equations used to space the steps on the ladder runners are dependent on the deployed geometries. Since the ladder has been designed to use as many of the same components as possible between models, the hinges and brackets used will always be the same. The runner lengths of the upper and lower sections will change.

Global variables are used in the Master file which correspond to the output variables from the Excel Geometry calculator. Changes to the global variables change the individual components which in turn are reflected in the Master assembly. The corresponding variables between the calculator and the assembly are:

- R_L is R;
- N is N;
- L_2 is $L2$;
- L_1 is $L1$.

As in the Excel Geometry calculator, $L2$ is the length of the upper section runners and $L1$ is the length of the lower section runners. R is the spacing between ladder steps, and N is the total number of ladder steps (upper and lower). R and N create the linear pattern along the ladder runners that sets the vertical and horizontal step positions. The linear pattern of steps is mated parallel with the A-frame hinge and the step mounting holes are projected using the Convert Entities feature to create an extruded cut through the upper section runners.

The provided SolidWorks file uses the projections from the Convert Entities feature, for the longest ladder case. When adjustments are made to the geometry, errors will occur in the model, and the sketches must be deleted to remove the unlocated projections and remove the error state.

3.4. Design Components

Various off-the-shelf components are used in the design. A latch, gas strut, springs, and bushings have all been sourced from appropriate suppliers and can be used in the ladder.

3.4.1. Latch

To ensure the upper ladder section does not deploy when the fire truck is in motion, a latch device is used. The latch uses mating mechanical links to securely lock another part. Southco offers a variety of latches which are applicable for the design; the selected latch is a rotary latch, which combine rotary-action security with a push-to-close mechanism [11].

The Southco R5-05-41-505-10, a Two Stage — Bottom, Integrated Bumper Rotary Latch is selected to meet Need 18 (that the ladder not deploy while the truck is in motion) and is shown in Figure 3.15. Instead of mating with the standard striker bolt from Southco, the latch will mate with a U-shaped anchor made of steel, shown in Figure 3.16. In the latch's closed position, it fully envelops the anchor for secure grip and protection.

The latch incorporates an integrated bumper to reduce the effects of vibrations through the metal [11] and can be attached to the upper-lower connection bracket at the point shown in Figure 3.17. The latch is formed from steel and is assumed to provide sufficient mechanical strength to prevent the ladder from deploying when it should not.

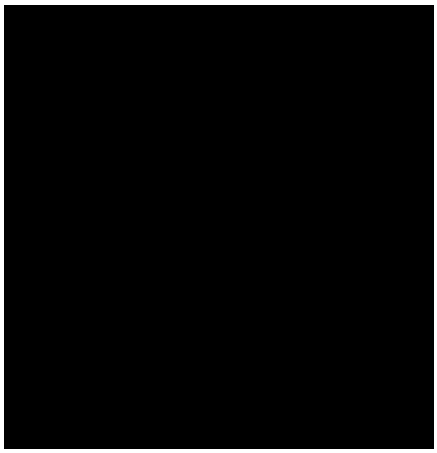

Fig. 3.15. Two Stage — Bottom, Integrated Bumper Rotary Latch model [11].

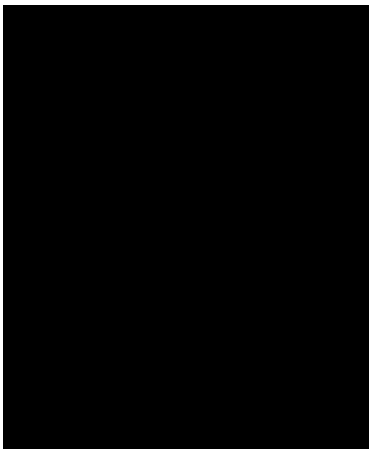

Fig. 3.16. U-shaped anchor to mate with the rotary latch [12].

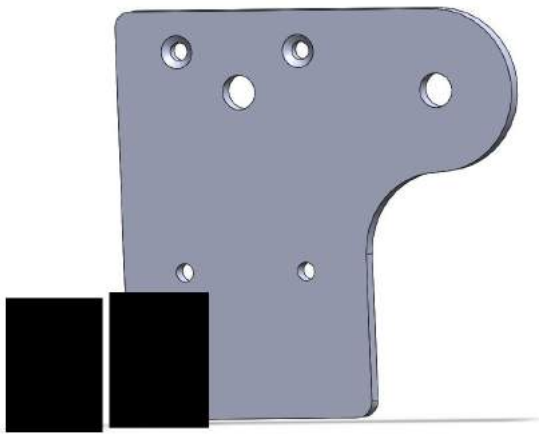

Fig. 3.17. Connection of the rotary latch to the upper-lower connection bracket

3.4.2. Gas Strut

The gas strut aids the ladder deployment and its placement is selected to provide a symmetric load to the ladder. Two options are considered:

In the first option, the gas strut is connected to the support bar between the two A-frame hinges. A large strut with a minimum stroke of 14.2" meets the support bar and is also connected to the body of the truck. This placement centres the support bar.

In the second option, a smaller strut is mounted on the left side of the support bar. When the ladder is stowed, the strut is 15" long and is horizontal. When the ladder is deployed, the strut extends to 26.2" long and angles downward as it pivots with the ladder motion, as shown in Figure 3.18.

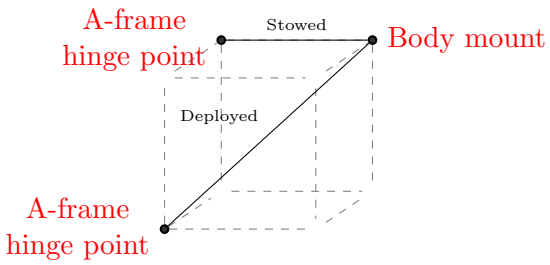

Fig. 3.18. Geometry of the gas strut in the stowed and deployed positions.

The second option is recommended, although has not been added to the final design solid model.

3.4.3. Position Control Spring

The corrosion-resistant spring used to control the position of the lower ladder section is a 3.5" long extension spring from McMaster-Carr, shown in Figure 3.19, with an extension length up to 7.07" [13]. Based on the geometry of the ladder, shown in Figure 3.20, the spring will act as a position lock when the ladder is stowed or deployed. The spring has an unstretched length a and is connected so it is always stretched to length c in the stowed or deployed position. When the lower section is rotated between the stowed or deployed positions, its length will be between c and $a+b$. The tensile force in the spring is proportional to the distance it is stretched from equilibrium, and $a+b>c$, so the spring will have a tendency to pull the lower ladder section closer to the body of the truck and hold it in the deployed or stowed position.



Fig. 3.19. Corrosion-resistant stainless steel spring [13].

By placing a spring on each side of the ladder, a force of 14.5 lb is exerted in tension when the ladder has length c in the deployed or stowed position. The applied force linearly increases to a maximum of 20 lb when the lower ladder section is perpendicular to the upper ladder section. Since the lower ladder section has a maximum weight of 5 lb, the springs will force the ladder to remain in the open or closed position.

The springs will be attached by connecting either end with washers and bolts to the lower section with 0.25" bolts. This will allow it to rotate freely with the lower ladder section. The opposite end of the springs will be attached to the pivot hole of the A-frame hinge in the upper-lower connection bracket, using the same mounting techniques.

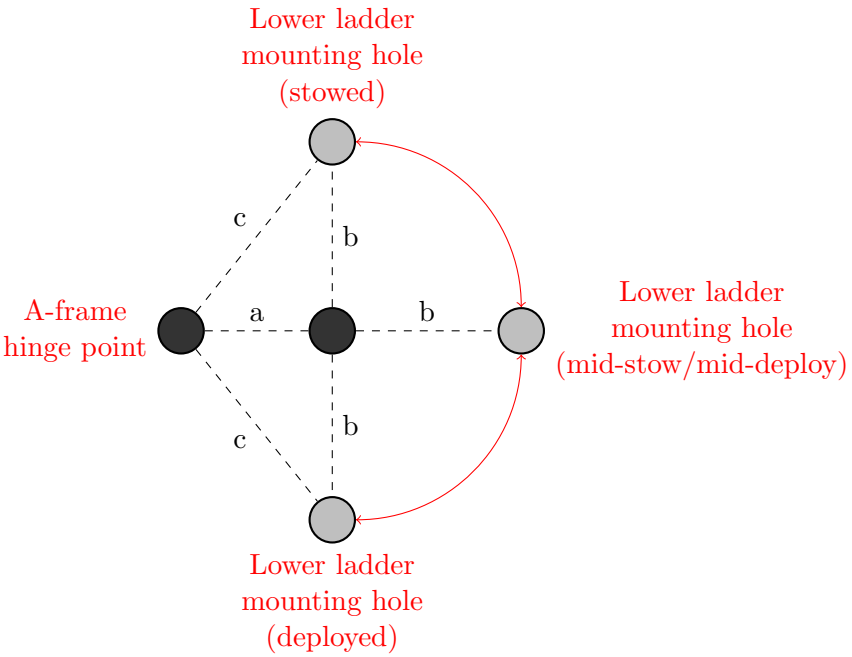

Fig. 3.20. Position control spring geometry.

3.4.4. Bushings

The bushings are nylon 6-6 bushings supplied by Steeves Agencies, from Micro Plastics, Inc. The nylon bearings provide a sacrificial wear surface that is not significantly affected by ice buildup. Various lengths of bushings are used, all with 0.5" ID and 0.53" OD.

Depending on the availability and cost, the bushings are subject to change. Physical testing should be done to ensure the bushings used are appropriate for the cyclic loading nature of the design.

3.4.5. Handrail

Handrails are installed on the ladder to provide three points of contact to the user while climbing and let the ladder meet Need 4. The handrails are positioned on the external side of the runner, and are gnurled to provide slip resistance. The handrails are available from Austin Hardware, which is FGFT's current supplier.

The gnurled handrail rod has a diameter of 1.24" and can be cut to the desired length. Two rods are used in the ladder, one for each side. The rod, without the gnurling, is shown

in Figure 3.21.



Fig. 3.21. Handrail rod [14].

The rod is supported by end brackets which fit on either end of the rod and attach to the aluminum flat bar. The end bracket has an internal diameter of 1.25"; four end brackets are used in the design — two for each handrail. The end bracket is shown in Figure 3.22. Additionally, two centre brackets (one per handrail) are used to provide further support. The centre bracket has an ID of 1.31" and is shown in Figure 3.23.

The brackets connect to the ladder flat bars using a bracket gasket, shown in Figure 3.24, that is 3.06" long and 1.31" wide. Six brackets are used in the design. The handrail is shown attached to the ladder in Figure 3.25.

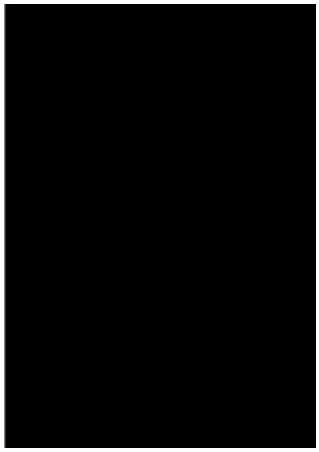

Fig. 3.22. End bracket used to support the handrail [14].

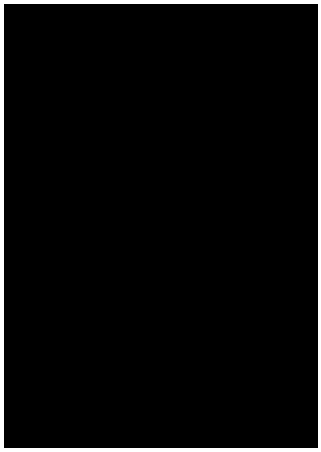

Fig. 3.23. Centre bracket used to support the handrail [14]

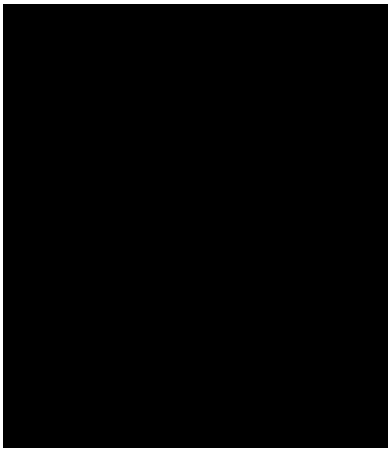

Fig. 3.24. Bracket gasket used to attach the brackets to the ladder [14].

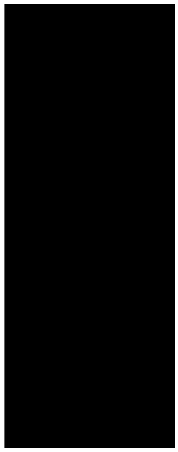

Fig. 3.25. Attachment of the handrail to the ladder flat bar [14]

3.5. Standard Operating Procedure

The ladder is designed so it can be deployed by a single user in two steps: releasing the mechanical latch and pulling on the lower section to move the ladder. The deployment process is as follows:

The ladder is locked mechanical using the previously-specified rotary latch and U-shaped anchor combination. To deploy the ladder, the latch must be detached from the striker bolt by pressing the tab on the rotary latch. The device will then unlatch as shown in

Figure 3.26.

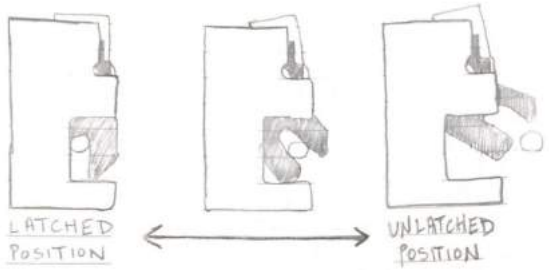

Fig. 3.26. Rotary latch operating mechanism (reproduced) [15].

The user should unlock the latch using their left hand while supporting the ladder with their right hand to prevent it from falling uncontrollably. With the latch unlocked, the user should then firmly grip the runner or step of the lower section with two hands. With a firm grip, the user can pull the lower section out from its stowed position. The lower section will snap into the deployed position after it passes the plane perpendicular with the upper section.

The pulling motion will also cause the upper section to move away from the body as the A-frame extends. The gas strut on the A-frame will control the deployment of the upper section, as the upper section's weight will cause the ladder to fall into the deployed position. Furthermore, the gas strut will also hold the ladder in the deployed position during use.

3.6. Final Design

The completed design is shown in Figure 3.27. Some hole sizes may be subject to change due to availability of bearings, but this will not change the external dimensions of the required components. Using the SolidWorks Mass Properties tool, the lower ladder section weighs 3.23 lb and the upper ladder section weighs 112.17 lb, for a total weight of 115.39 lb. This is for the worst-case longest ladder and it is expected that the average weight of ladders produced will be lower.

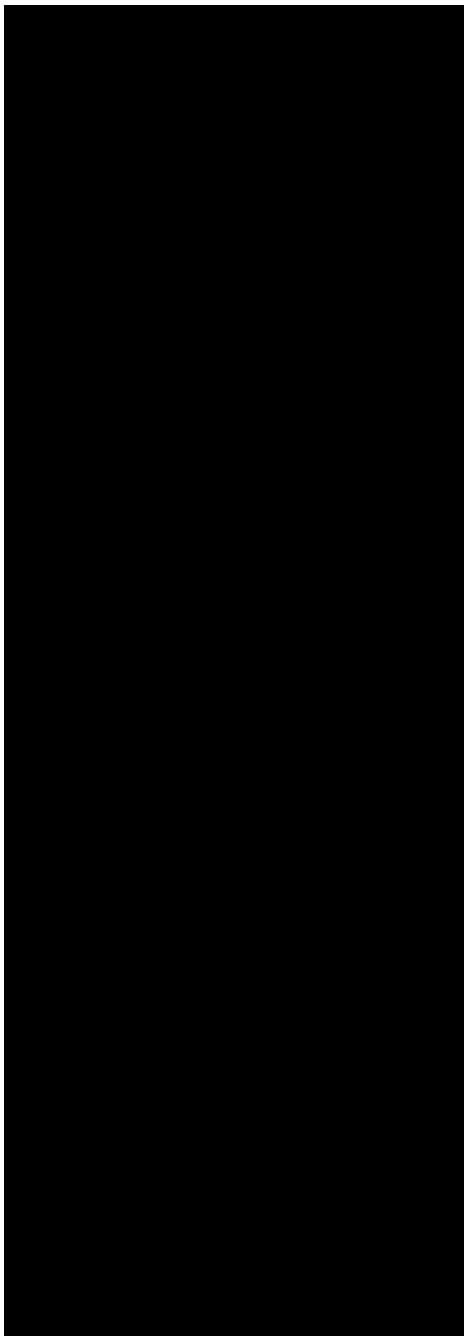

Fig. 3.27. Completed adjustable ladder design.

4. Finite Element Analysis

SolidWorks FEA was used to analyze the stresses in various components of the final ladder design. The top and bottom mounting brackets, the A-frame hinges, the upper-lower connection bracket, and both the upper and lower runners are analyzed to determine the maximum stress and deflection due to the application of the external load. A finer mesh density is used at critical points to ensure accurate results, and the stressed evaluated are compared to the yield strengths of the two materials used in the design with a safet factor of 2.

The two materials used in the design, aluminum 6061-T6 and ASTM A36 HRS have yield strengths of 39.9 ksi and 36.3 ksi, respectively. The yield strength of aluminum used in the analysis is slightly lower than the yield strength of 40 ksi [8] earlier, but is deemed acceptable since it causes the analysis to be more conservative.

The SolidWorks h-adaptive convergence test is used to ensure the finite element results are valid. It refines the mesh in critical areas, re-runs the study, refines the mesh more, until either the target accuracy is achieved, or the maximum specified loops are run. The test then compares the strain energy norm nodal response values to adjacent nodes to estimate the error in the analysis. When the result has converged it can be considered accurate. The loads and the geometries used in the analysis represent the worst-case scenario since the ladder will have carried sizes. The ladder used is the maximum length possible; this ensure that the ladder can support the highest bending moment possible.

It is assumed that since the steps are a product FGFT already uses, there is no need to numerically analyze them. It is also assumed that the maximum acceptable deflection in the other components is 5 mm.

4.1. Top Mounting Bracket FEA

The solid model of the top mounting bracket uses A36 steel as a material. A 500 lb bearing force in the negative-y direction is applied to the pivot point and is used as an assumed

worst-case scenario in which the centre of mass of the user is located at the very edge of the ladder step. The four bolt holes in the component are given fixed geometry and a roller fixture is applied to the surface of the bracket in contact with the truck. The application of the load and fixtures is shown in Figure 4.1.

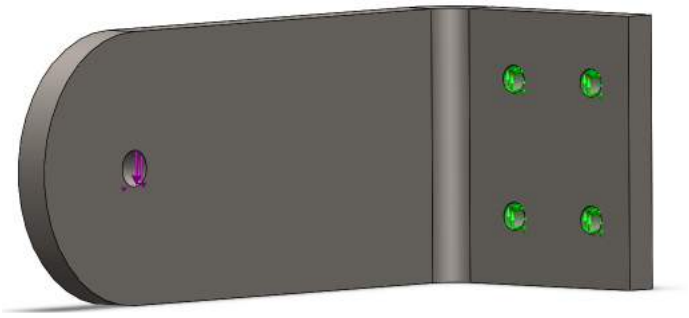

Fig. 4.1. Applied load and fixed geometries for the top mounting bracket.

Initially, the mesh was created as a curvature-based mesh due to the curved geometry of the component. This mesh type detects curvatures in the model and adjusts the element size to best fit the curved edge, which gives higher accuracy in the model. Using the built-in h-adaptive test in SolidWorks, the mesh is refined to 20,442 total elements with 32,787 total nodes and a maximum element size of 0.2894". As shown in Figure 4.2, the mesh allows the study to converge to 8.28% total relative strain energy. Figure 4.3 shows the mesh on the model after the final iteration; the elements are concentrated at the bending section of the component.

Figure 4.4 shows the points of maximum and minimum deflection in the component. The maximum deflection of 0.108 mm is located away from the fixtures, near to the point of load application, and is deemed to be small enough to meet the design specifications.

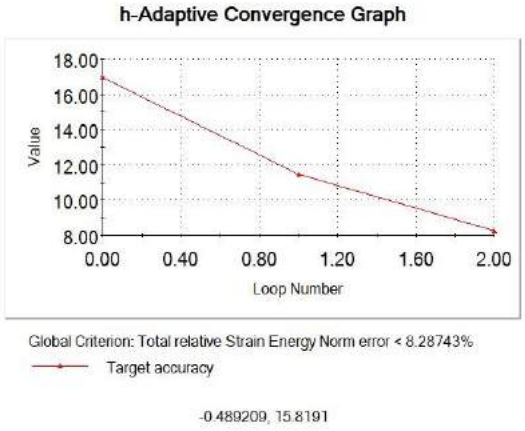

Fig. 4.2. H-adaptive convergence plot for the top mounting bracket.

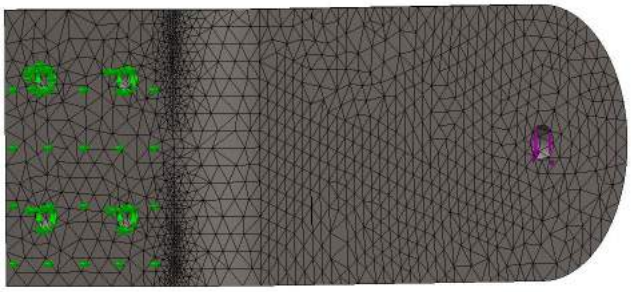

Fig. 4.3. Final mesh for FEA of the top mounting bracket.

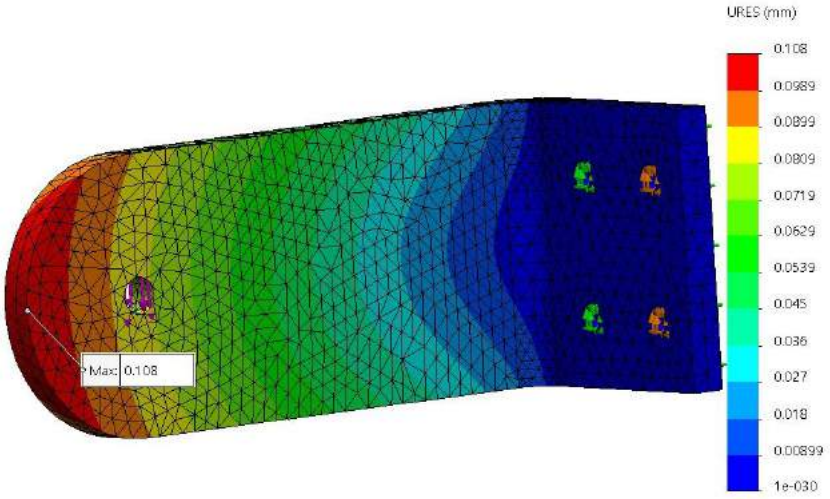

Fig. 4.4. Deflection plot of the top mounting bracket under loading.

Figure 4.5 shows the von Mises stress distribution plot due to the 500 lb bearing load; the maximum and minimum stresses in the component are noted. The maximum stress in the component is 26.7 ksi, which is below the yield strength of 36.3 ksi. When the safety factor of 2 is applied, the stress in the component is 53.4 ksi, which exceeds the yield strength; factor of safety in the component is 1.47. However, the 500 lb bearing load should be revised. Modeling the 15" long step as a beam supported at either end, and assuming that the user's centre of mass is 5" from the edge of the step, the bearing load applied to the bracket is 333.3 lb, which is 1.5 times smaller than the 500 lb load. Since the stress in the component is directly proportional to the load applied, the stress in the component will be 17.8 ksi. This is below the yield strength of the material with a safety factor of 2.

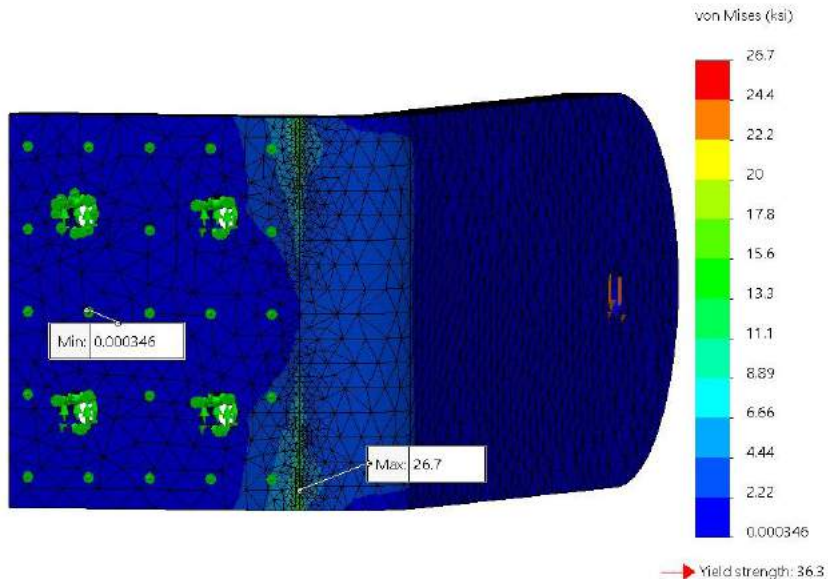

Fig. 4.5. Von Mises stress distribution in the top mounting bracket under loading.

The minimum stress in the component is 0.346 psi. Figure 4.6 shows a close-up view of the von Mises stress at the bending curve of the component. The uneven stress distribution in the bracket is indicative that geometry optimization is possible, but changes to the geometry will increase manufacturing costs so will not be considered. As will be discussed in Section 5, the steel component will be bent, imparting cold-worked properties to the material and increase its yield strength. Physical testing may be required to check the

strength of the bracket.

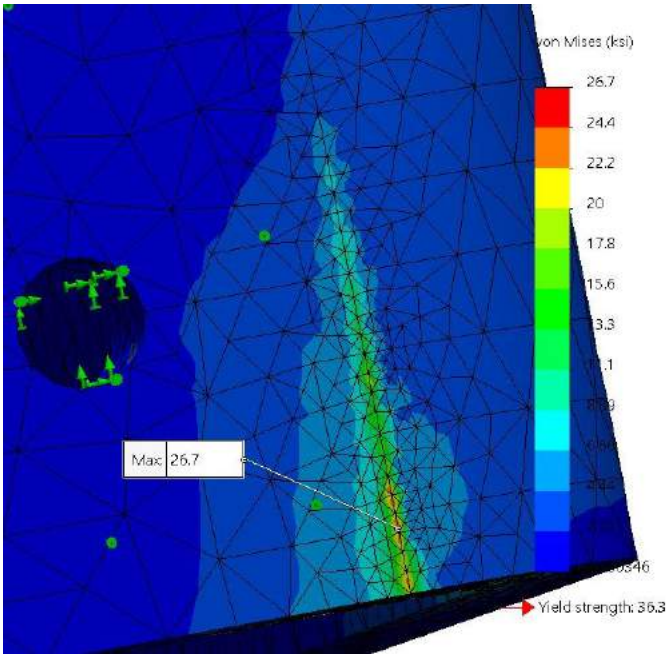

Fig. 4.6. Critical von Mises stress in the top mounting bracket under loading.

4.2. Bottom Mounting Bracket FEA

The solid model of the bottom mounting bracket uses SolidWorks A36 steel as a material. A force of 500 lb directed in the negative-y direction is applied to the pivot hole. The 500 lb force is used as an assumed worst-case scenario in which the centre of mass of the user is located at the very edge of the ladder step. A fixed support feature is applied at the two bolt holes. The load and fixtures used for the FEA are shown in Figure 4.7.

Initially, the mesh was created as a curvature-based mesh due to the curved geometry of the component. Using the built-in h-adaptive test in SolidWorks, the mesh is refined to 1,203 total elements with 2519 total nodes and a maximum element size of 0.165434". Figure 4.8 shows the mesh on the model after the final iteration.

Figure 4.9 shows the deflection plot of the bottom mounting bracket. The point of maximum deflection of 0.0433 mm is located away from the fixtures near to the point of load application, and is deemed to be small enough to meet the design specifications.

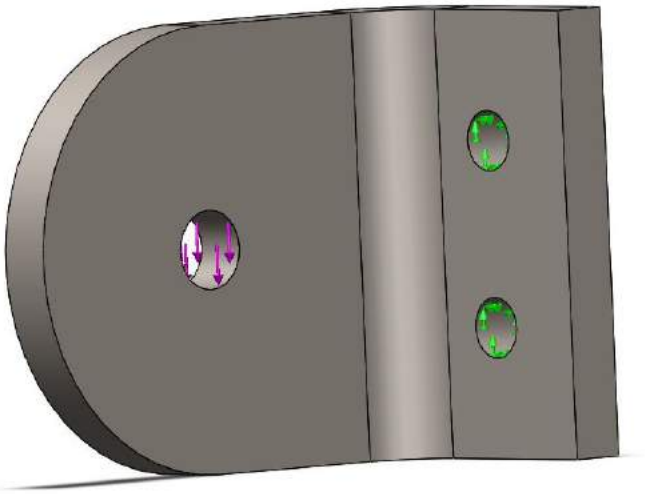

Fig. 4.7. Applied load and fixed geometries for the bottom mounting bracket.

Figure 4.10 shows the von Mises stress distribution under loading. The maximum von Mises stress of 17.3 ksi in the component is located at the top bolt hole, which has fixed geometry. Accordingly, this value is dismissed as a divergent stress concentration. Further from the fixture, the true maximum stress is 6.11 ksi as shown in Figure 4.11. With a material yield strength of 36.3 ksi, the safety factor in the component is 5.94. The minimum stress in the component is 0.0211 ksi.

Prior to the FEA, the thickness of the lower mounting bracket had been reduced from its original size. Despite this, there is still an uneven stress distribution, indicating that geometrical optimization is possible. It will however not be performed due to the associated increase in manufacturing costs. Like the top mounting bracket, the lower mounting bracket will be bent and will be imparted cold-worked properties that should be physically tested.

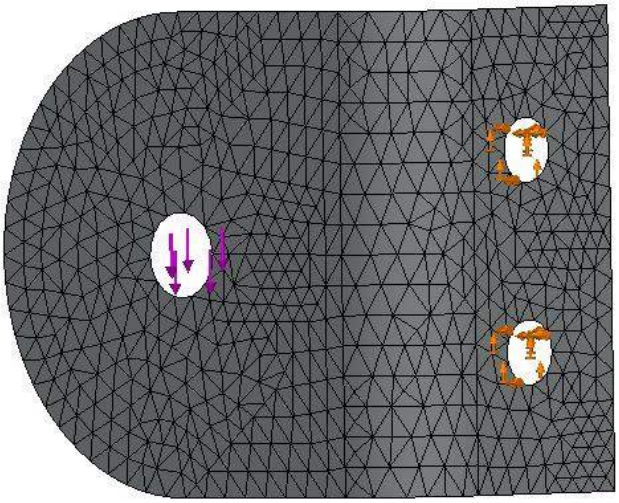

Fig. 4.8. Final mesh for FEA of the bottom mounting bracket.

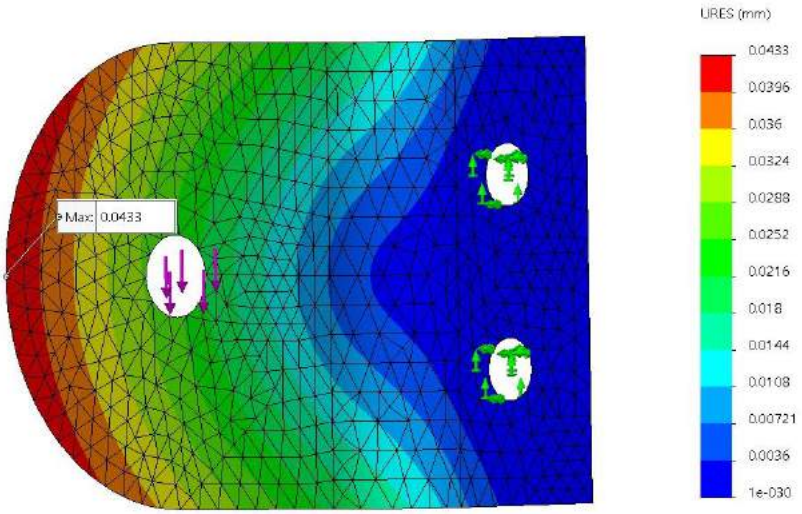

Fig. 4.9. Deflection plot of the bottom mounting bracket under loading.

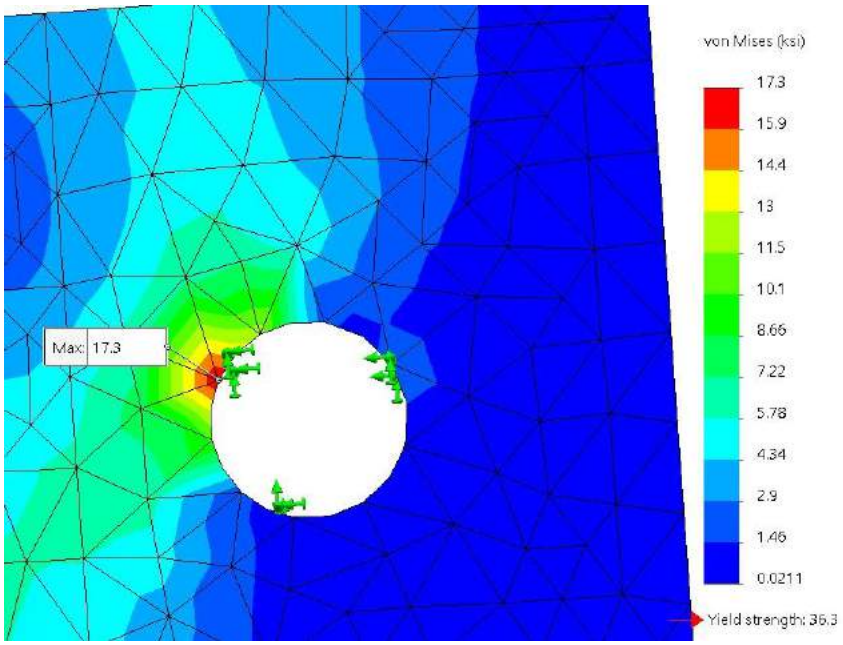

Fig. 4.10. Von Mises stress distribution showing divergent stress concentration in the bottom mounting bracket.

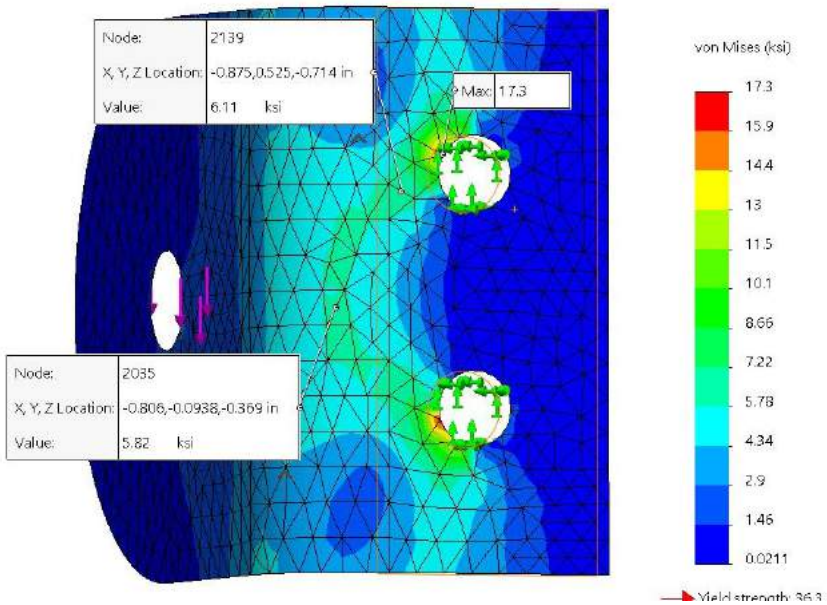

Fig. 4.11. Von Mises stress distribution in the bottom mounting bracket under loading.

4.3. A-Frame Hinges FEA

One of the two linkages in the A-frame hinge is tested with FEA, since the two linkages have equivalent loads and geometries. The solid model uses SolidWorks A36 steel as its material. A 500 lb bearing load in the x-direction at the right pivot hole is applied. The load used is for an assumed worst-case scenario in which the total weight of the user is applied directly to the very edge of the step. Fixed support features are applied at the left pivot hole and the small rectangular weld point. The load and the applied fixtures are shown in Figure 4.12.



Fig. 4.12. Applied load and fixed geometries for the A-frame hinge.

Initially, the mesh was created as a curvature-based mesh due to the curved geometry of the component. Using the built-in h-adaptive test in SolidWorks, the mesh is refined to 21,214 total elements with 32,271 total nodes and a maximum element size of 0.198216". As shown in Figure 4.13, the mesh allows the study to converge to 1.15% total relative strain energy. Figure 4.14 shows the mesh on the model after the final iteration; the elements are concentrated at the load application point and the rectangular weld surface.

Figure 4.15 shows the deflection plot of the A-frame hinge. The point of maximum deflection of 0.0097 mm is located at the pivot hole where the load is applied, and is deemed to be small enough to meet the design specifications.

Figure 4.16 shows the von Mises stress distribution under loading. The maximum von Mises stress of 6.78 ksi in the component is located at the point of load application. Comparing this maximum stress to the yield strength, the component has a safety factor of 5.94. The minimum stress in the linkage is 0.00439 ksi. Figure 4.17 shows a close-up view of the von Mises stress at the pivot hole. The stresses throughout the rest of the component are low compared to the yield strength of steel, but its thickness will be kept the same to remain consistent with the other components and maintain lower material costs. Other geometrical optimization will increase machining costs and will not be pursued.

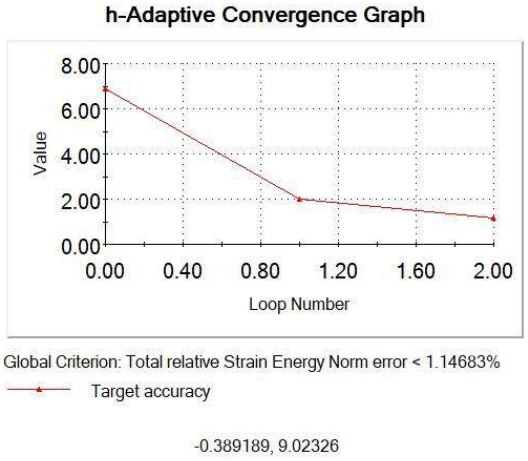

Fig. 4.13. H-adaptive convergence plot for the A-frame hinge.

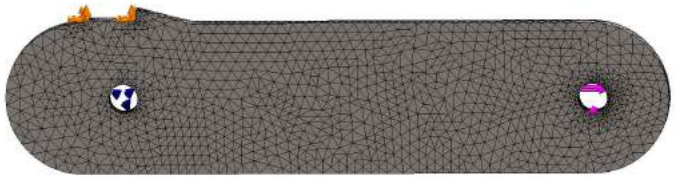

Fig. 4.14. Final mesh for FEA of the A-frame hinge.

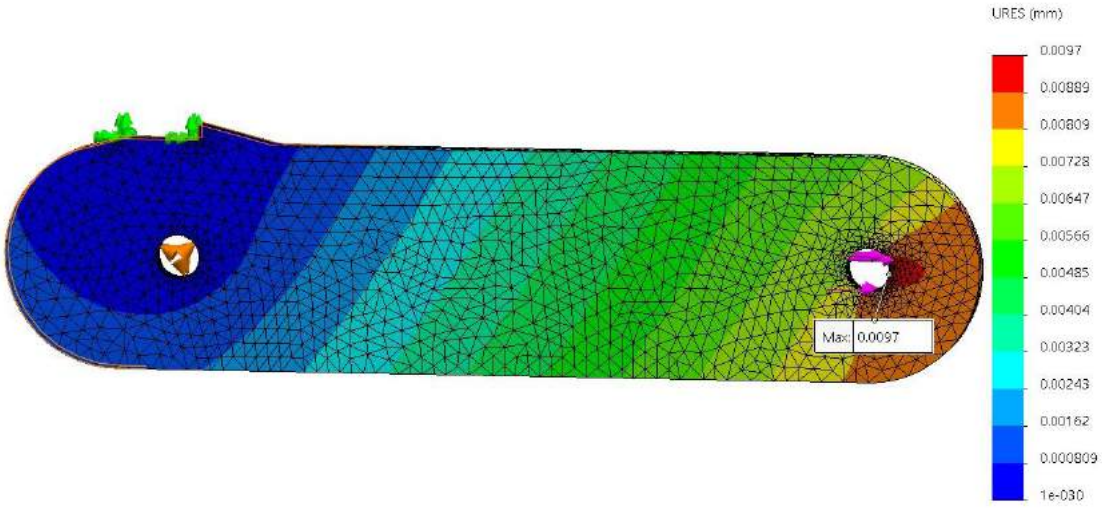

Fig. 4.15. Deflection plot of the A-frame hinge under loading.

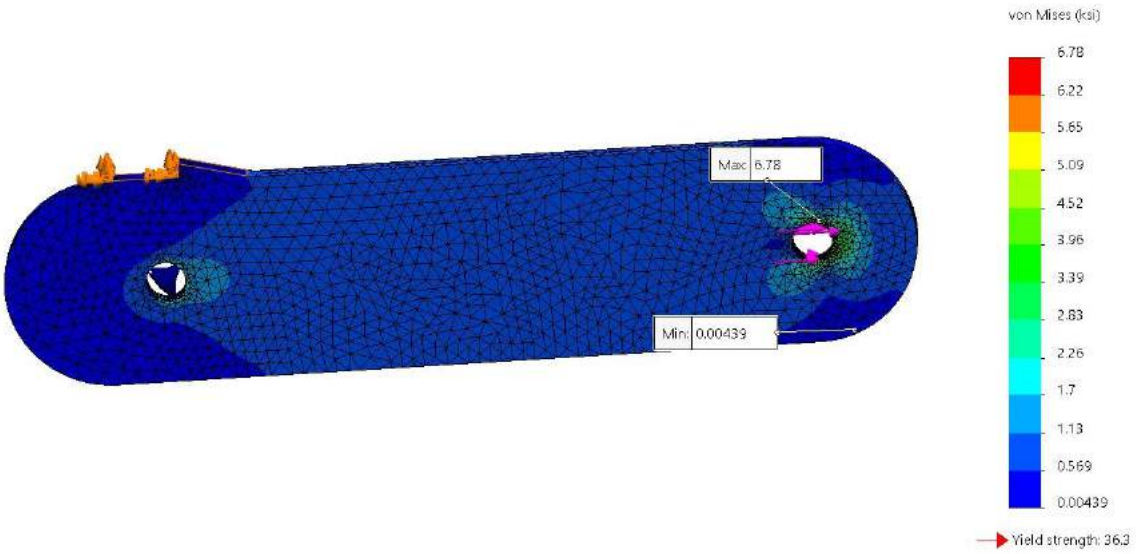

Fig. 4.16. Von Mises stress distribution in the A-frame hinge under loading.

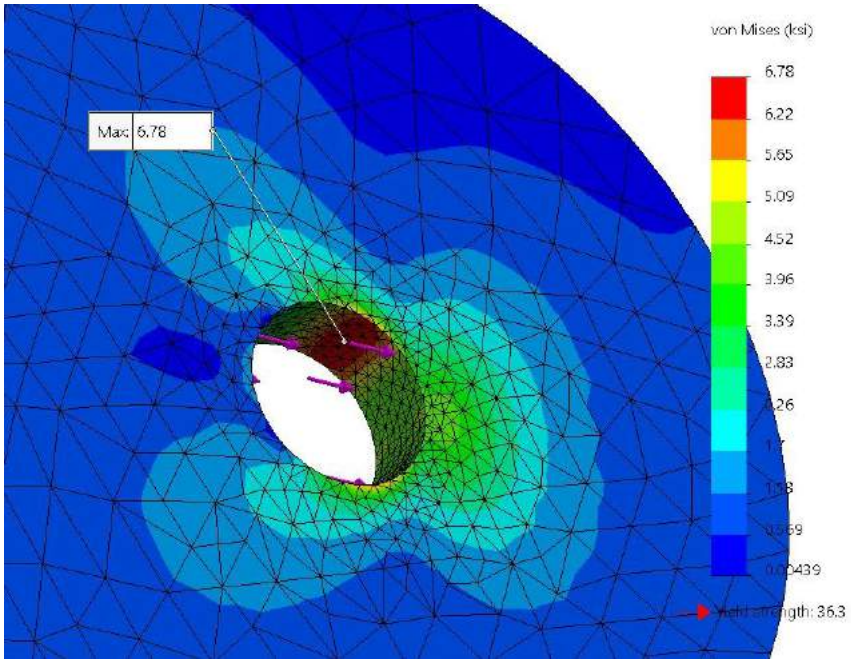

Fig. 4.17. Critical von Mises stress in the A-frame hinge under loading.

4.4. Upper-Lower Connection Bracket FEA

The solid model is created using SolidWorks A36 steel as a material. A 500 lb force, directed in the negative-y direction, is applied to the pivot hole. The 500 lb force is used for an assumed worst-case scenario in which the user's weight is centred at the very edge of a step. Fixed support features are applied at the four bolt holes and the pivot where the A-frame is connected. Loads and fixtures on the upper-lower connection bracket are shown in Figure 4.18.

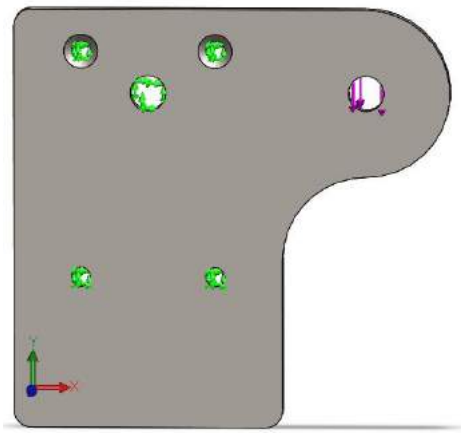

Fig. 4.18. Applied load and fixed geometries for the upper-lower connection bracket.

Initially, the mesh was created as a curvature-based mesh due to the curved geometry of the component. Using the built-in h-adaptive test in SolidWorks, the mesh is refined to 21,306 total elements with 35,300 total nodes and a maximum element size of 0.196099". As shown in Figure 4.19, the mesh allows the study to converge to 1.80% total relative strain energy. Figure 4.20 shows the mesh on the model after the final iteration; the elements are concentrated at the pivot point where the force was applied and at the right side bolt holes.

Figure 4.21 shows the deflection plot of the upper-lower connection bracket. The point of maximum deflection of 0.0103 mm is located at the front end of the component, near to the point of load application, and is deemed small enough to meet the design specifications.

Figure 4.22 shows the von Mises stress distribution in the component under loading. The maximum von Mises stress of 19.6 ksi is located at the upper right bolt hole, which has fixed geometry. Accordingly, this value is dismissed as a divergent stress concentration.

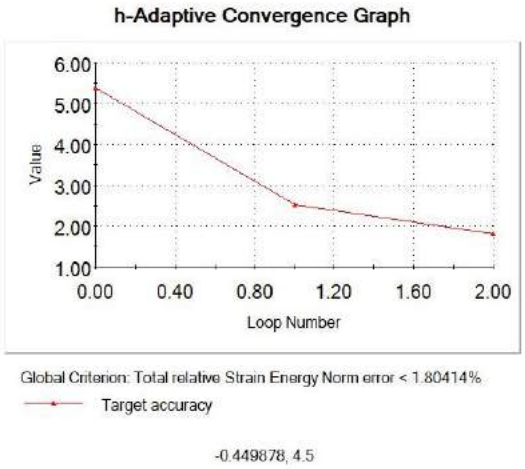

Fig. 4.19. H-adaptive convergence plot for the upper-lower connection bracket.

Further from the fixture, the true maximum stress is 3.51 ksi as shown in Figure 4.23. With a material yield strength of 36.3 ksi, the safety factor in the component is 10.34. The minimum stress in the component is 0.00439 ksi.

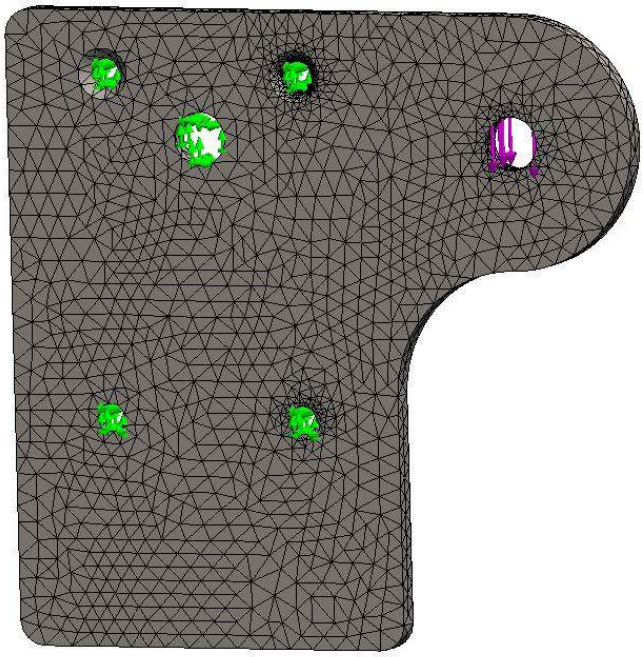

Fig. 4.20. Final mesh for FEA of the upper-lower connection bracket.

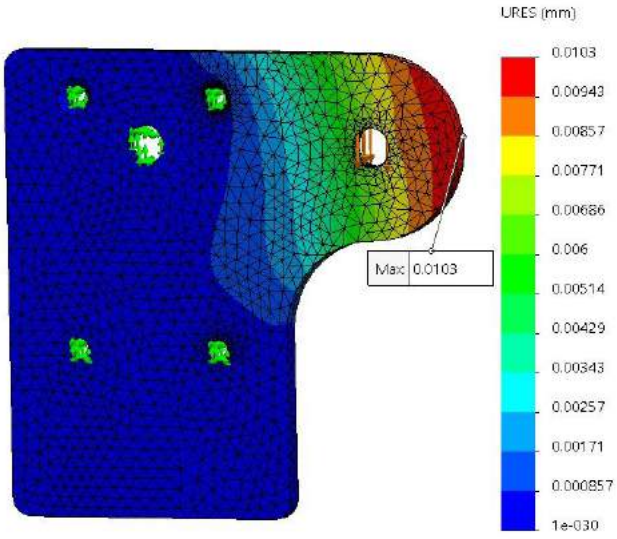

Fig. 4.21. Deflection plot of the upper-lower connection bracket under loading.

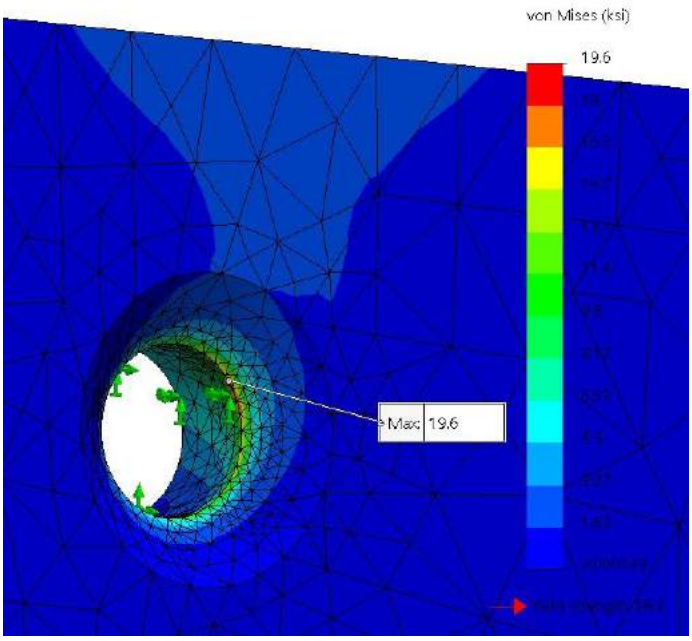

Fig. 4.22. Von Mises stress distribution showing divergent stress concentration in the bottom mounting bracket.

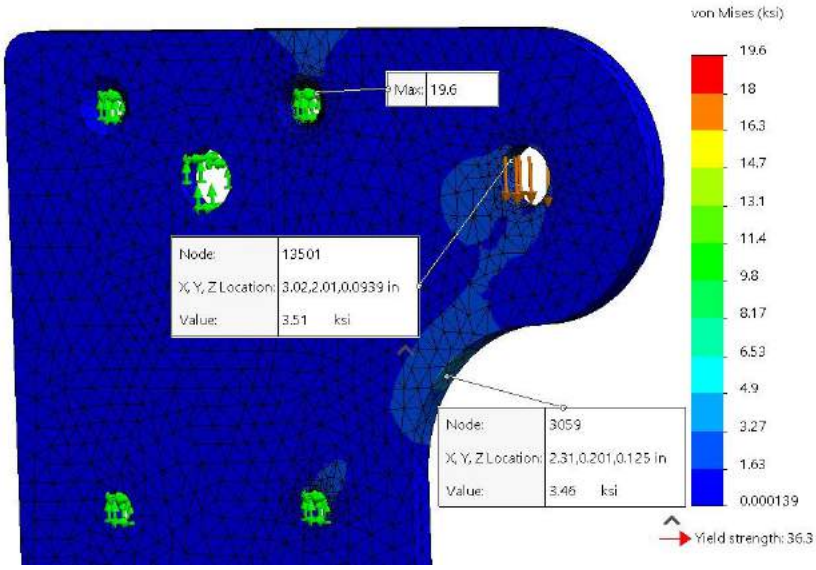

Fig. 4.23. Von Mises stress distribution in the upper-lower connection bracket under loading.

4.5. Lower Section Runner FEA

The FEA on the lower section runner is performed using SolidWorks aluminum 6061-T6 as a material. A total force of 500 lb, in the negative-y direction is applied between the two bolt holes. The 500 lb is used as an assumed worst-case scenario in which the user's centre of mass is located directly on the edge of the ladder step. Fixed geometry is applied to the pivot hole attached to the upper-lower connection bracket. The loads and fixtures are shown in Figure 4.24.

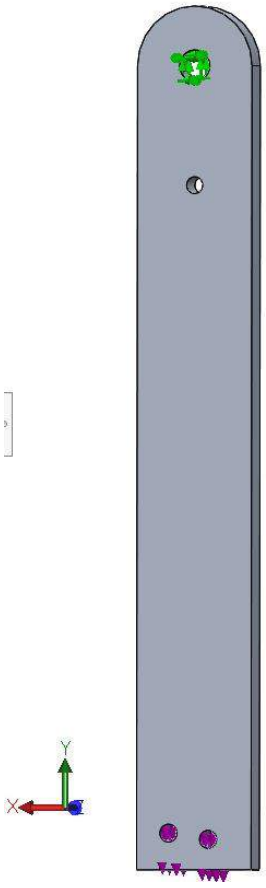

Fig. 4.24. Applied load and fixed geometries for the lower section runner.

Initially, the mesh was created as a curvature-based mesh due to the curved geometry of the component. Using the built-in h-adaptive test in SolidWorks, the mesh is refined to 30,256 total elements with 47,764 total nodes and a maximum element size of 0.241284". As

shown in Figure 4.25, the mesh allows the study to converge to 0.785% total relative strain energy. Figure 4.26 shows the mesh on the model after the final iteration; the elements are concentrated at between the two bolt holes and at the top bolt hole near the pivot point.

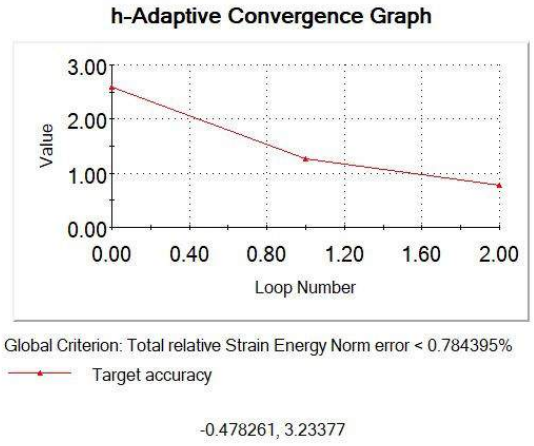

Fig. 4.25. H-adaptive convergence plot for the lower section runner.

Figure 4.27 shows the points of maximum and minimum deflection in the component. The maximum deflection of 0.047 mm is located away from the fixture, near to the point of load application, and is deemed to be small enough to meet the design specifications.

Figure 4.28 shows the von Mises stress distribution under loading. The maximum von Mises stress of 1.92 ksi in the component is located at the pivot point, which has fixed geometry. Accordingly, this value is dismissed as a divergent stress concentration. Further from the fixture, the true maximum stress is 1.51 ksi as shown in Figure 4.29. With a material yield strength of 39.9 ksi, the safety factor in the component is 26.4. The minimum stress in the component is 0.00368 ksi.

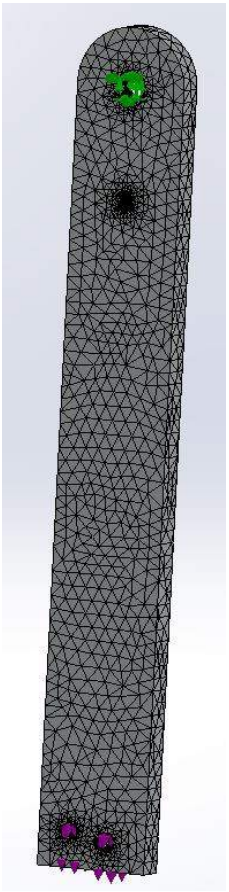

Fig. 4.26. Final mesh for FEA of the lower section runner.

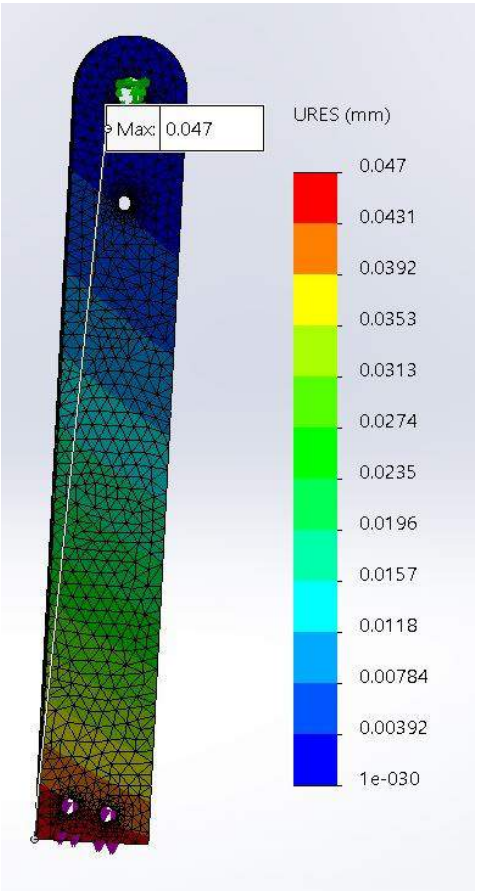

Fig. 4.27. Deflection plot of the lower section runner under loading.

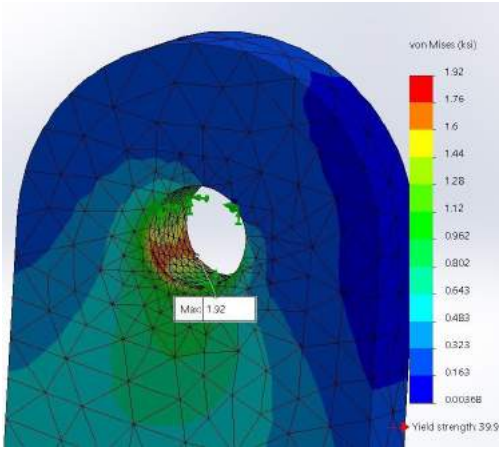

Fig. 4.28. Von Mises stress distribution showing divergent stress concentration in the bottom mounting bracket.

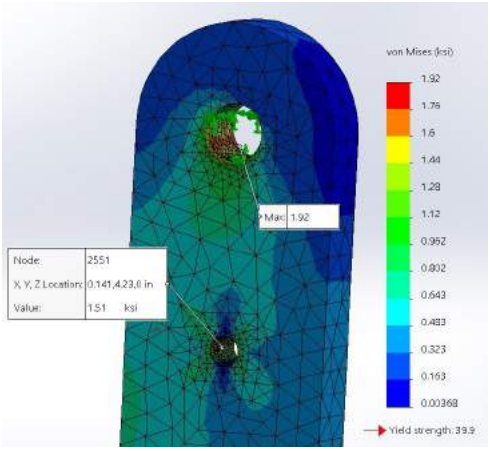

Fig. 4.29. Von Mises stress distribution in the lower section runner under loading.

4.6. Upper Section Runner FEA

Two FEA cases are considered for the upper section runner. The first case occurs when the user is at the midpoint of the ladder's upper section, and the second case occurs when the user is at the bottom of the ladder's upper section while climbing. For both cases, the solid model uses aluminum 6061-T6 as a material.

4.6.1. Case 1

To simulate the user's weight while standing at the midpoint of the ladder's upper section, a total force of 500 lb is applied in the negative y-direction on the two bolt holes at that point. The 500 lb force is used as an assumed worst-case scenario in which the user's centre of mass is directed at the very edge of the ladder. Fixed support geometries are applied at the top pivot hole connecting to the top mounting bracket and the bottom pivot hole connecting to the A-frame hinge. The applied load and fixtures are shown in Figure 4.30.

Initially, the mesh created was a standard mesh. Using the built-in SolidWorks h-adaptive test, the mesh was refined to the one shown in Figure 4.31. After five iterations of mesh refinement, the final mesh has 79,608 total elements with 126,803 nodes and a maximum element size of 0.568435"; the elements are concentrated at the bolt and pivot holes in the runner. As can be seen in Figure 4.32, the study converges to 0.7338% total relative strain energy.

Figure 4.33 shows the deflection plot of the upper section runner. The maximum deflection of 0.0402 mm is located in the middle of the flat bar, below the point of load application, and is deemed small enough to meet the design specifications.

Figure 4.28 shows the von Mises stress distribution under loading. The maximum von Mises stress of 1.11 ksi in the component is located at the point of load application. With a material yield strength of 39.9 ksi, the safety factor in the component is 35.95. The minimum stress in the component is 0.000634 ksi. Figure 4.35 shows a close-up view of the von Mises stress at the bolt hole where the load is applied. Clearly, dimensional optimization is possible, but due to the associated increase in manufacturing costs it will not be considered.

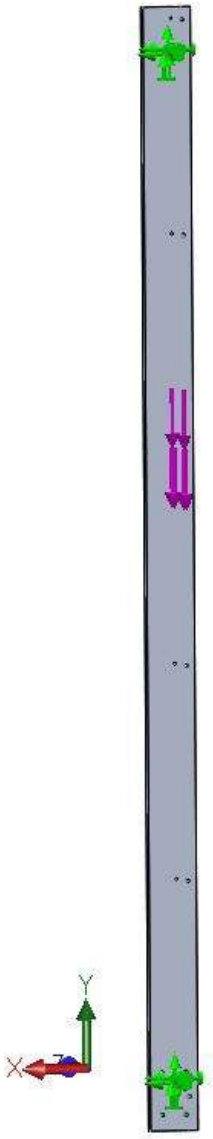

Fig. 4.30. Case 1: applied load and fixed geometries for the upper section runner.



Fig. 4.31. Case 1: final mesh for FEA of the upper section runner.

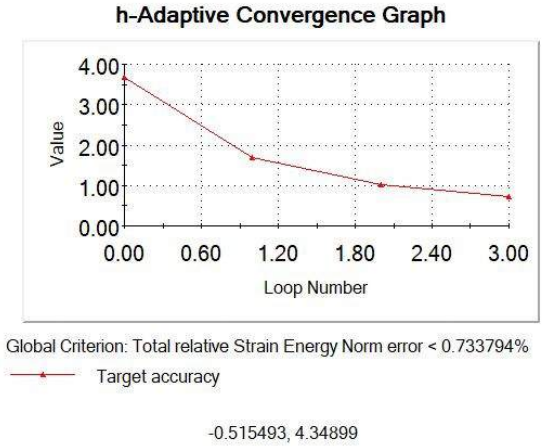

Fig. 4.32. Case 1: h-adaptive convergence plot for the upper section runner.

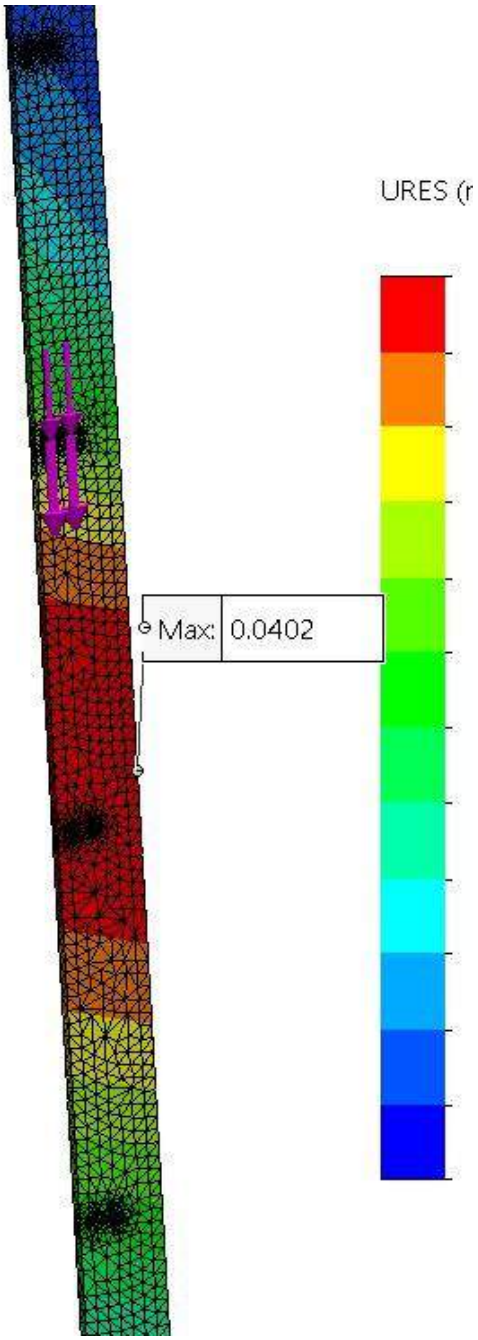

Fig. 4.33. Case 1: deflection plot of the upper section runner under loading.

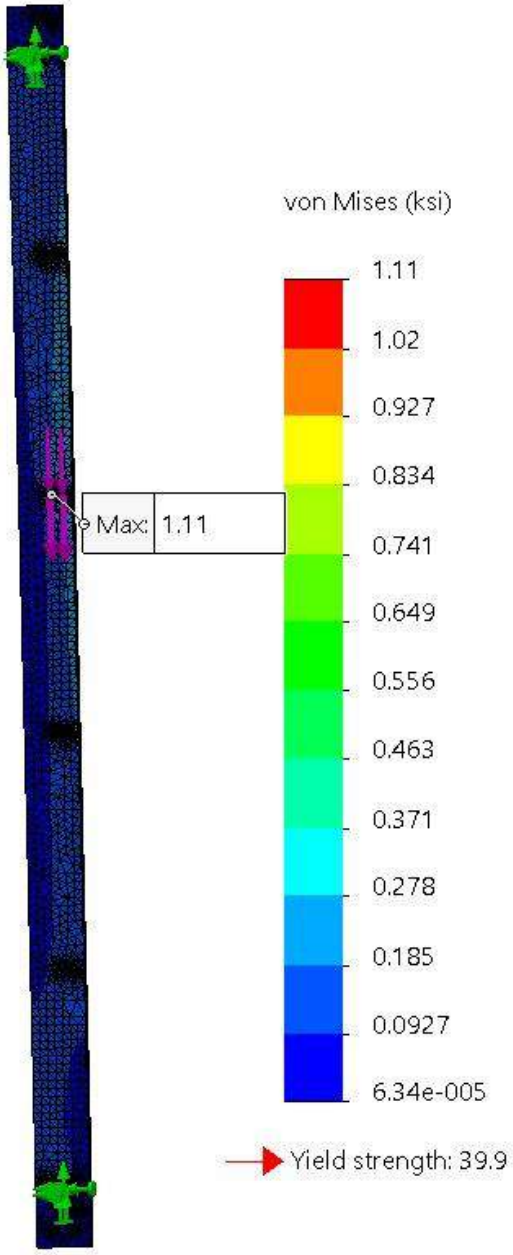

Fig. 4.34. Case 1: von Mises stress distribution in the upper section runner under loading.

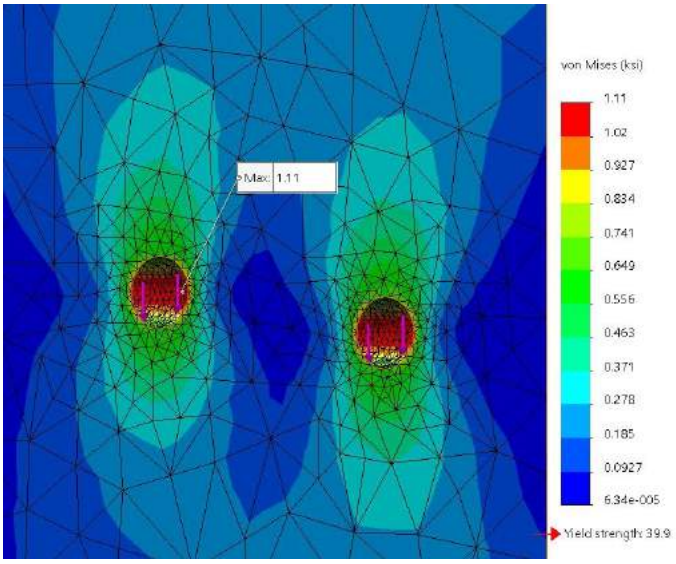

Fig. 4.35. Case 1: critical von Mises stress in the upper section runner under loading.

4.6.2. Case 2

To simulate the user's load while standing at the bottom of the upper ladder section while climbing, four loads are applied: 61.5 lb and 6.43 lb are applied at the bottom pivot hole in the positive-x and positive-y directions, respectively, and 52.26 lb and 497.26 lb are applied at the bottom of the flat bar in the negative-x and negative-y directions, respectively. A fixed support feature was applied at the top pivot hole that is connected to the upper mounting bracket. The load and the fixtures applied are shown in Figure 4.36.

Initially, the mesh was created using a standard mesh. Using the built-in h-adaptive test in SolidWorks, the mesh was refined to the one shown in Figure 4.37. After five iterations of mesh refinement, the final mesh has 84,277 total elements with 133,571 total nodes and a maximum element size of 0.568435"; the elements are concentrated at the bolt and pivot holes in the runner. As can be seen in Figure 4.38, the study converges to 0.7559% total relative strain energy.

Figure 4.39 shows the deflection plot under loading. The maximum deflection of 1.55 mm is found at the lower end of the component, and is deemed to be small enough to meet the design specifications.

Figure 4.40 shows the von Mises stress distribution under loading. The maximum von Mises stress of 5.37 ksi in the component is located at the top pivot hole which has a fixed geometry. Accordingly, this value is dismissing as a divergent stress concentration. Further away from the top pivot hole, the true maximum stress in the component is 1.28 ksi as shown in Figure 4.41, just below the bolt hole. Figure 4.42 shows a close-up view of the von Mises stress at the bolt hole where the load is applied. With a yield strength of 39.9 ksi, the component has a factor of safety of 31.17. Clearly, dimensional optimization is possible, but due to the associated increase in manufacturing costs it will not be considered.

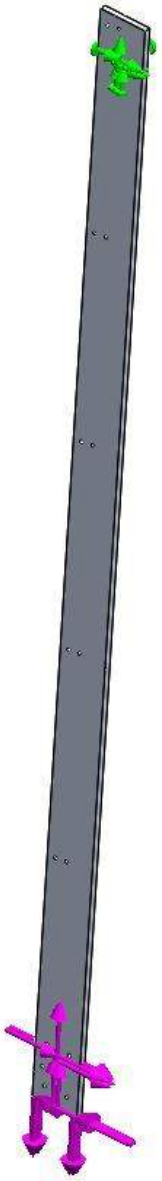

Fig. 4.36. Case 2: applied load and fixed geometries for the upper section runner.



Fig. 4.37. Case 2: final mesh for FEA of the upper section runner.

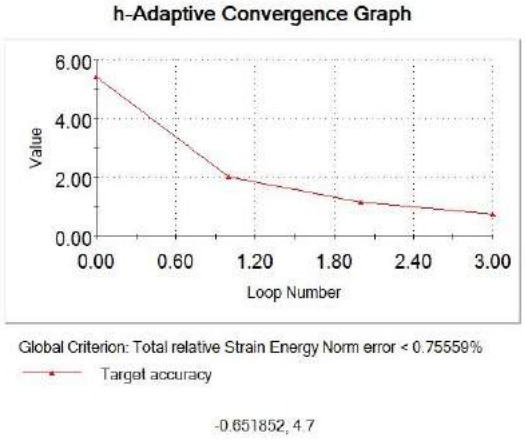

Fig. 4.38. Case 2: h-adaptive convergence plot for the upper section runner.

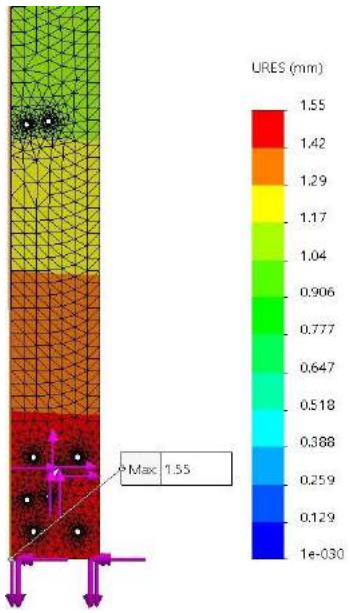

Fig. 4.39. Case 2: deflection plot of the upper section runner under loading.

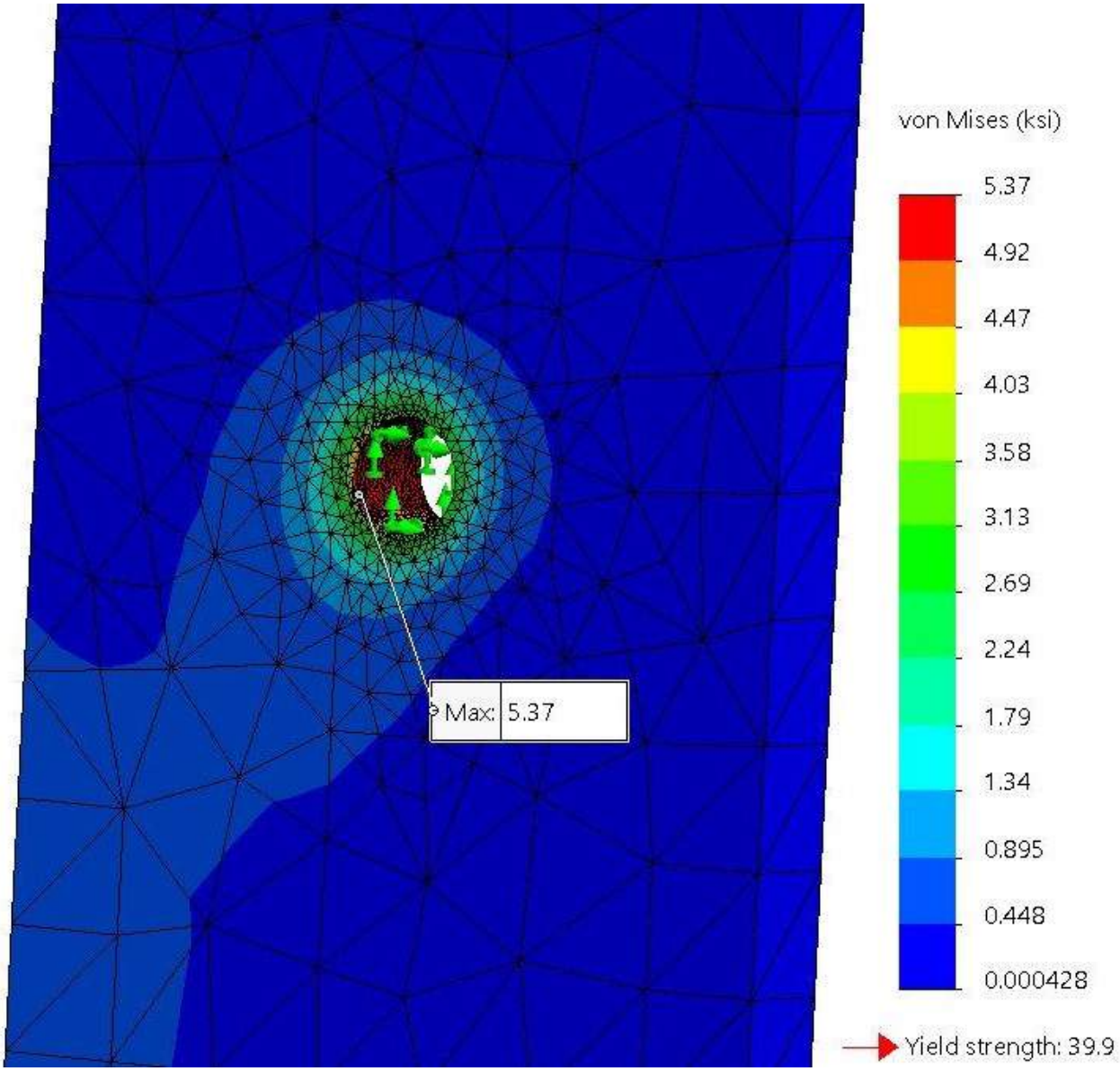

Fig. 4.40. Case 2: von Mises stress distribution showing divergent stress concentration in the bottom mounting bracket.

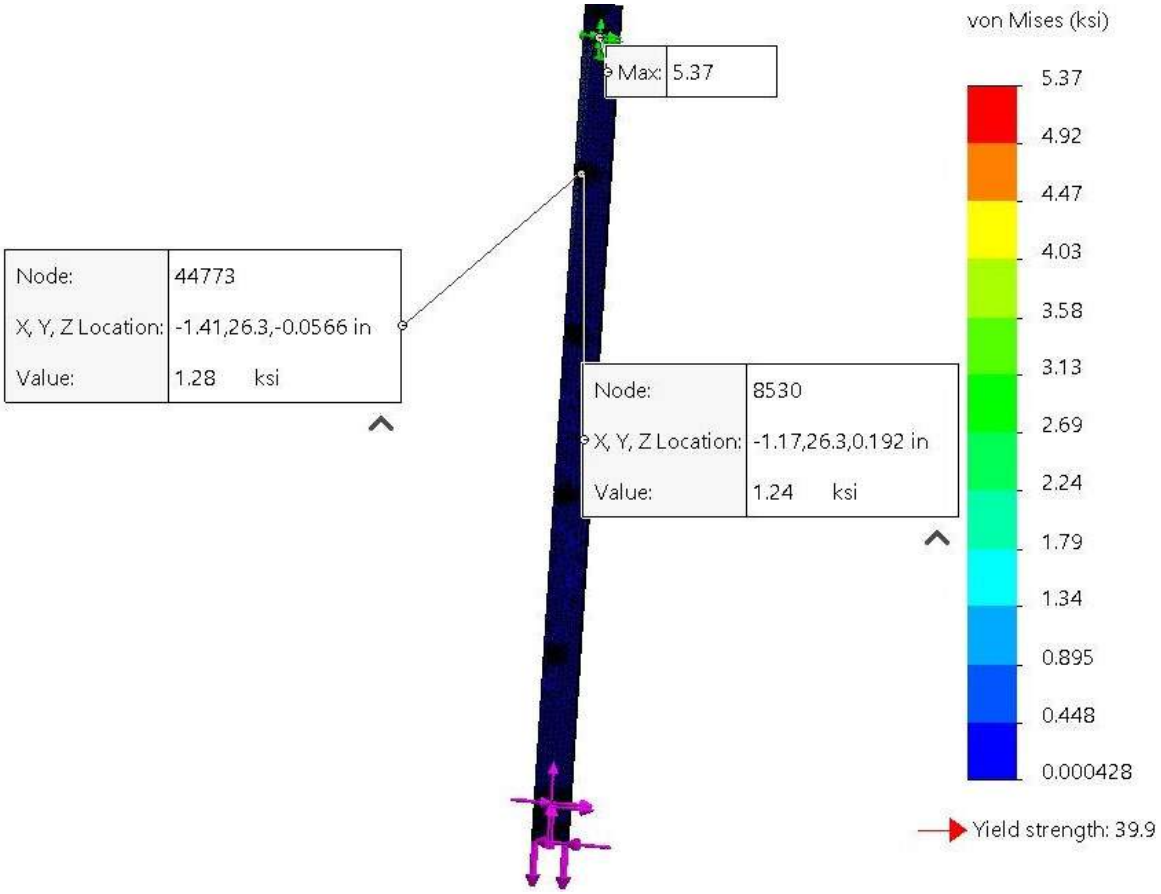

Fig. 4.41. Case 2: von Mises stress in the upper section runner under loading.

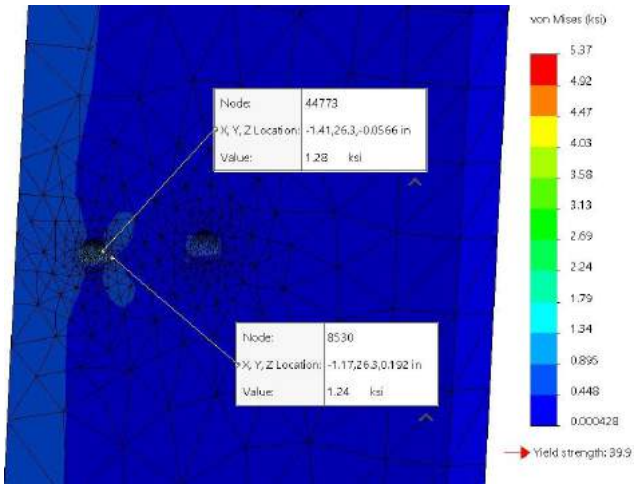

Fig. 4.42. Case 2: close up view of actual critical von Mises stress in the upper section runner under loading.

4.7. FEA Summary

The component with the lowest factor of safety is the upper mounting bracket. In further iterations of this design, it is recommended that the upper mounting bracket design be reviewed to improve its strength.

The minimum factor of safety of the components in the design is 2, while the highest is 31.17. This indicates that further iterations of the design may be able to be optimized, specifically in the ladder runners using the second load case.

5. Manufacturing and Assembly

Instructions pertaining to the manufacturing and assembly processes of the ladder are explained here. The components of the design are referred to by their part numbers; a summary of which is provided in Table X.

The ladder will be manufactured using a combination of aluminum 6061-T6 and A36 Hot Rolled Steel (HRS) as raw materials for custom components. Springs, gas struts, bolts, and bushings are all purchased components. Preliminary manufacturing drawings are prepared as per the standard specified by the client.

TABLE X.
PART NUMBERS.

Part Number	Description	Process / Material
1111	Ladder runner, upper section	Alum 6061 T6 Flat Bar 0.50" x 4.00"
1112	Upper brackets and hinge	0.50" A36 HRS plate, laser cut, bent
1115	A-frame linkage, ladder side	0.25" A36 HRS plate, laser cut
1122	Ladder runner, lower section	Alum 6061 T6 Flat Bar 0.50" x 4.00"
1124	Upper platform support piece, outer (4")	Alum 6061 T6 Flat Bar 0.50" x 4.00"
1125	Upper platform support piece, inner (8")	Alum 6061 T6 Flat Bar 0.50" x 4.00"
1126	Lower bracket and A-frame hinge mount	3/8" A36 HRS plate, laser cut, bent
1127	A-frame linkage, body side	0.25" A36 HRS plate, laser cut
1128	Upper-lower connection bracket	0.25" A36 HRS plate, laser cut
1129	A-frame support strut	3/16" A36 HRS plate, laser cut
1130	Assembly, W/A Right side Ladder	Welded alum 6061 T6
1131	Assembly, W/A Left side Ladder	Welded alum 6061 T6
1132	Assembly, W/A A-Hinge	Welded steel
1133	Assembly, B/A Upper Ladder	Bolted assembly
1134	Upper-lower connection bracket	0.25" A36 HRS plate, laser cut
1135	Assembly, B/A Ladder	Bushing/mounting
Master	**Master Assembly**	**Full assembly with global variables**

5.1. Raw Material Handling

Most of the components making up the frame of the ladder are manufactured from raw materials. The runners and upper platform supports are made with aluminum flat bar and the other brackets and hinge parts are made with A36 steel plate.

The flat bar aluminum can be purchased in the specified dimensions, then saw-cut to length. Steel will be laser cut from stock sheets to the specified dimensions, and bent as required. Required holes can be drilled through both materials as per the dimensions in the provided preliminary manufacturing drawings.

5.1.1. Aluminum Components

The upper platform supports (P-1124 and P-1125) are made with a 0.5"×1.5" aluminum flat bar. The 8" long P-1124 is positioned horizontally between P-1125 and the upper section runner (P-1111), and has four 0.25" diameter holes drilled through it perpendicular to its vertical face. P-1125 is 4" long and has two 0.25" diameter holes drilled through its vertical face.

P-1111 is manufactured using 0.5"×4" aluminum flat bar of variable length and has three different diameters of holes drilled through it:

- 0.25" diameter holes for steps;
- 0.53" diameter holes for the upper hinge point;
- 0.28" diameter holes for the lower-section bracket connection.

The lower section runner (P-1122) is manufactured from 0.5"×2" flat bar of variable length with three different diameters of holes drilled through it:

- 0.30" diameter holes for steps;
- 0.28" diameter hole for the connection to the position control spring;
- 0.53" diameter holes for the hinge connection to the upper-lower connection bracket;

Preliminary manufacturing drawings for all aluminum components can be found in Appendix D.

5.1.2. Steel Components

The mounting brackets and hinges are made with A36 HRS. Three different thicknesses of sheet metal will be used in the design. First, the top hinge supports (P-1112) are laser-cut from 0.5" sheets. Second, the A-frame hinges (P-1115 and P-1127) and the upper-lower connection brackets (P-1128) will be laser-cut from 0.25" sheets. Lastly, the bottom mounting brackets (P-1126) will be laser-cut from 3/8" sheets. The five parts all have holes, which will also be laser-cut at this time.

Following the laser-cutting processes, P-1112 and P-1126 will undergo bending processes to achieve the desired geometries. The countersunk holes in P-1128 and P-1134 will be machined with the mill at FGFT following the laser cutting processes.

Preliminary manufacturing drawings for all steel components can be found in D.

5.2. Welding

One of the client needs was to minimize welding time required in the manufacturing of the ladder. Thus, only three subassemblysemblies require welds. P-1130 and P-1131 have aluminum welds and P-1132 has steel welds.

Most of the stress flowing through P-1130 and P-1131 will be supported by the bolts, so the weld does not have to be continuous. However, the presence of the welds reduces some of the load to be supported by the bolts. P-1124 and P-1125 are U-groove welded at the space between their respective edges and form subassembly P-1131. A small space forms between P-1111 and P-1125 and is filled with a fillet weld. Figure 5.1 on page 81 shows the weld pattern required for P-1130, which is the same subassembly as P-1131.

The weld in P-1132 is between P-1129 and P-1127. The fillet weld used has a length of 0.75", requiring the use of a small valve on the welding torch. Figure 5.2 on page 82 shows the weld pattern required for P-1132.

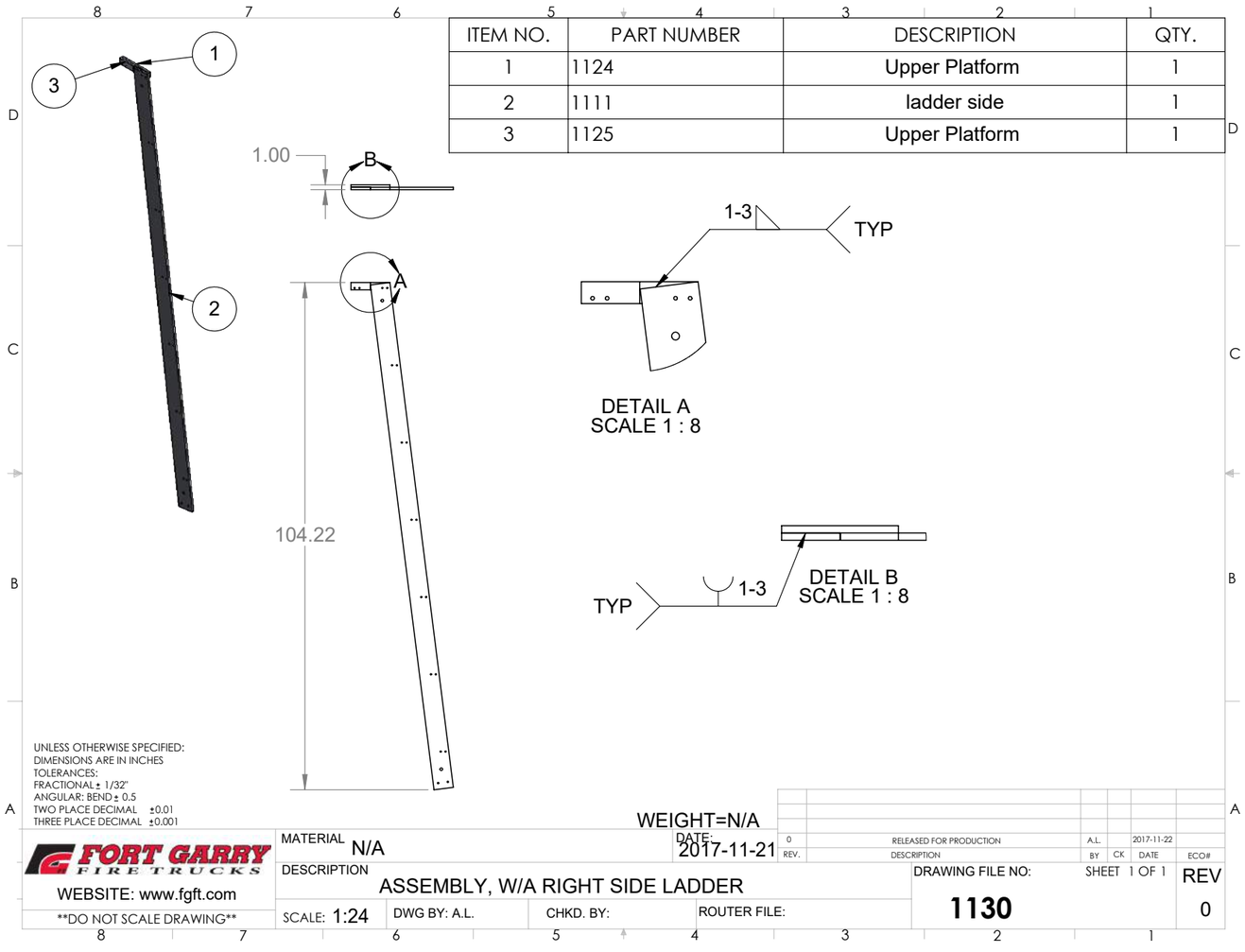

Fig. 5.1. P-1130 subassembly weld locations

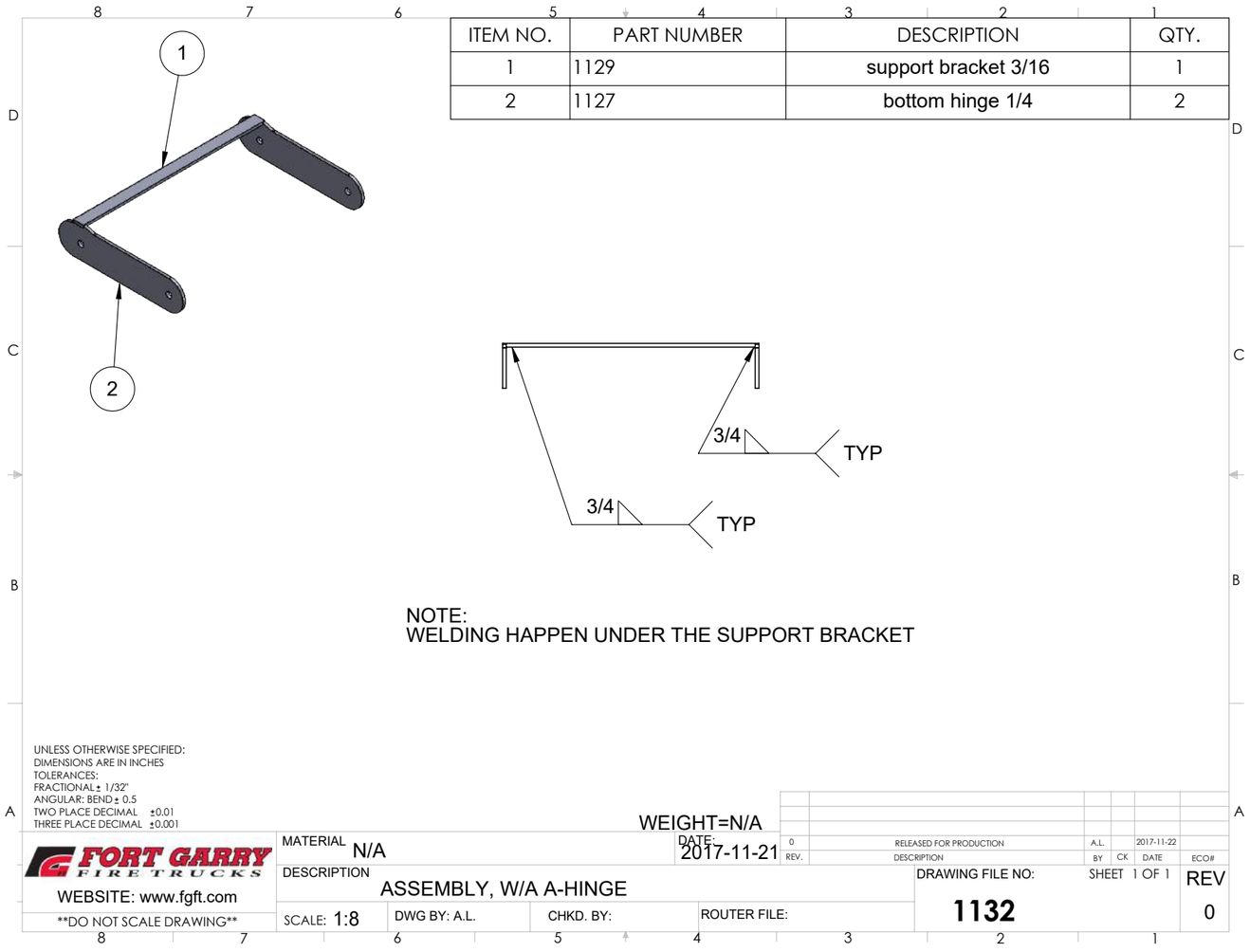

ITEM NO.	PART NUMBER	DESCRIPTION	QTY.
1	1129	support bracket 3/16	1
2	1127	bottom hinge 1/4	2

Fig. 5.2. P-1132 subassembly weld locations

5.3. Assembly

The entire ladder should be assembled in the following order. First, complete the welds specified for P-1132. Next, assemble as directed in P-1135 and P-1133. Finally, complete the welds specified for P-1130 and P-1131. Lastly, attach the top and bottom support brackets to the body of the truck using the method preferred by FGFT. Manufacturing and assembly instructions are shown here, while detailed manufacturing and assembly drawings can be found in Appendix D.

Most of the ladder is assembled with bolts. Seven different bolt sizes, two washer sizes, and two different locknut sizes are used. Four different sizes of bearings are used at the hinge points.

The position control springs for the lower ladder section are 3.5" long 302 stainless steel extension springs. The outer diameter of the spring is 0.438". The spring is corrosion resistant [13].

The gas strut used to control upper ladder section deployment has a compressed length of 15" and an extended length of 26.2", and is made of 316 stainless steel. The strut is corrosion resistant [16].

The ladder steps are sourced from Cast Products Inc. The lower section steps have part number SP2036-5 and the upper section steps have part number SP2042-5 [10].

The subassembly drawing for P-1133 presents the connection between the runners of the ladder and the steps, and is shown in Figure 5.3 on page 85. 0.25" diameter bolts are used to attach the steps through the holes in the runners. The bolt length is dependent on the thickness of the components that must be connected, and is displayed in the drawing. Washers and nylon locknuts are paired with the bolts to prevent loosening during use.

The bolts should be installed from the outside to the inside of the runner; the head of the bolt will be externally located and the washer and locknut will be located closer to the centre plane of the ladder. Countersunk bolts will be used for the countersunk holes in P-1128 and P-1134.

The subassembly drawing for P-1135 provides detail for the structural support brackets and hinges, and is shown in Figure 5.4 on page 86. For the hinge points, 0.5" bolts are used due to the higher distribution of the load through the components. The bolt length is dependent on the thickness of the components to be connected, and is displayed in the drawing. Washers and nylon locknuts, paired with nylon bearings, prevent loosening during use. The nylon bearings also act as a sacrificial wear surface at the hinge points.

The bearing length is also equal to the thickness of the joined components.

The required torque in the bolts is dependent on regulations related to the size of the bolts and bushings. No other requirements are specified for the bolt installation.

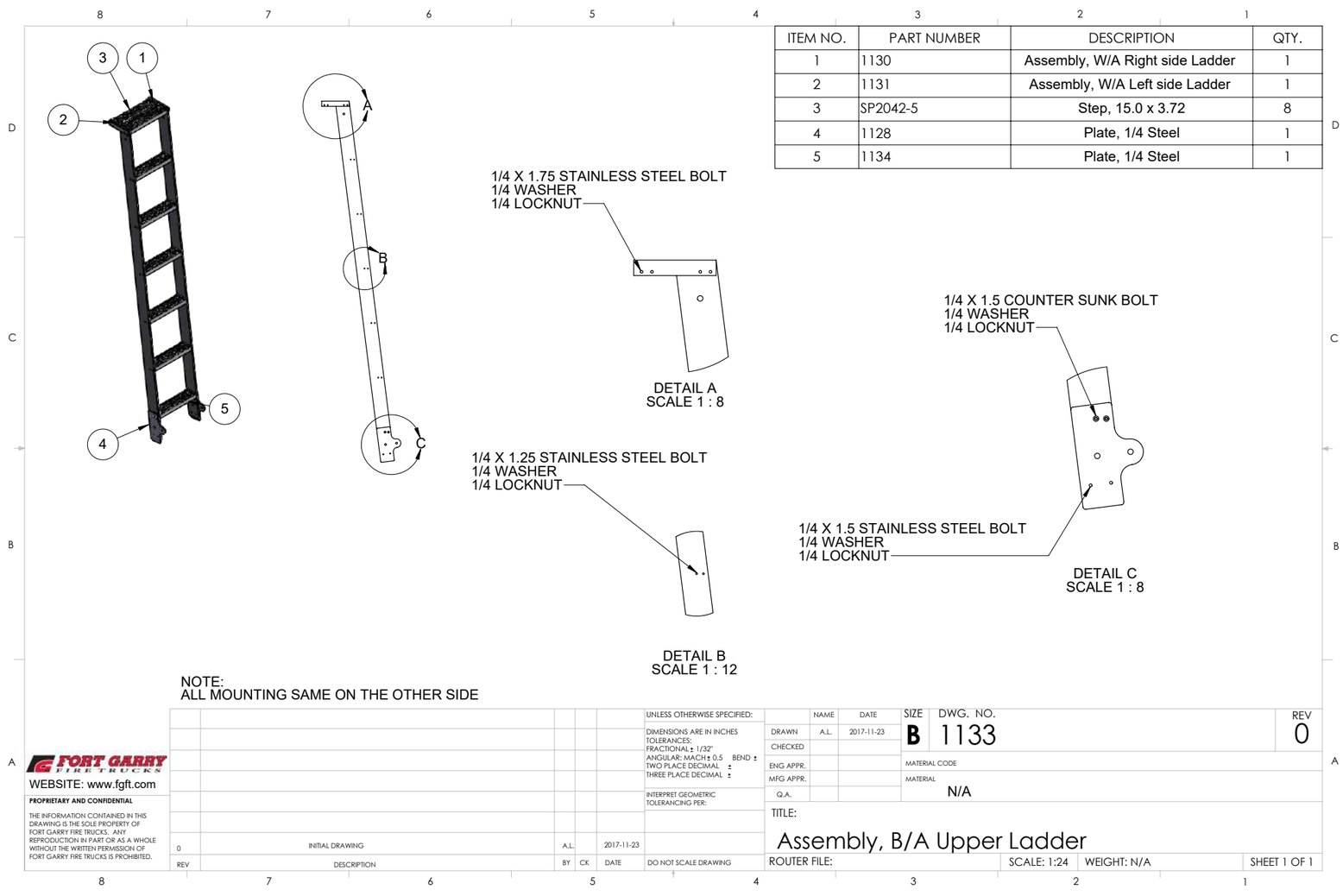

ITEM NO.	PART NUMBER	DESCRIPTION	QTY.
1	1130	Assembly, W/A Right side Ladder	1
2	1131	Assembly, W/A Left side Ladder	1
3	SP2042-5	Step, 15.0 x 3.72	8
4	1128	Plate, 1/4 Steel	1
5	1134	Plate, 1/4 Steel	1

REV	DESCRIPTION	BY	CK	DATE
0	INITIAL DRAWING	A.L.		2017-11-23

UNLESS OTHERWISE SPECIFIED:
DIMENSIONS ARE IN INCHES
TOLERANCES:
FRACTIONAL ± 1/32"
ANGULAR: MACH ± 0.5 BEND ±
TWO PLACE DECIMAL ±
THREE PLACE DECIMAL ±
INTERPRET GEOMETRIC TOLERANCING PER:
DO NOT SCALE DRAWING

	NAME	DATE
DRAWN	A.L.	2017-11-23
CHECKED		
ENG APPR.		
MFG APPR.		
Q.A.		

SIZE B | DWG. NO. 1133 | REV 0

MATERIAL CODE

MATERIAL: N/A

TITLE: Assembly, B/A Upper Ladder

ROUTER FILE: | SCALE: 1:24 | WEIGHT: N/A | SHEET 1 OF 1

FORT GARRY FIRE TRUCKS
WEBSITE: www.fgft.com

PROPRIETARY AND CONFIDENTIAL

THE INFORMATION CONTAINED IN THIS DRAWING IS THE SOLE PROPERTY OF FORT GARRY FIRE TRUCKS. ANY REPRODUCTION IN PART OR AS A WHOLE WITHOUT THE WRITTEN PERMISSION OF FORT GARRY FIRE TRUCKS IS PROHIBITED.

Fig. 5.3. P-1133 assembly instructions.

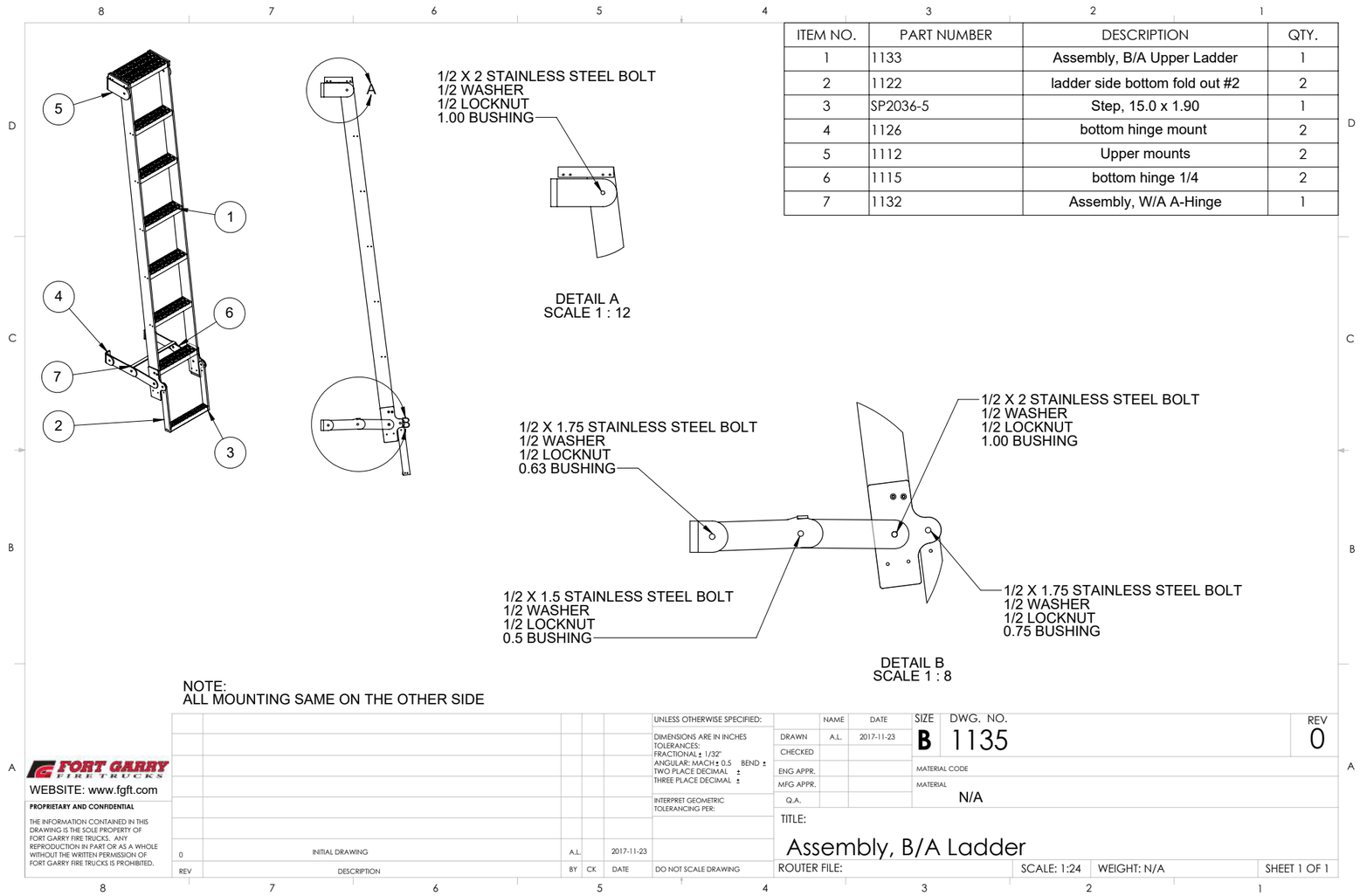

ITEM NO.	PART NUMBER	DESCRIPTION	QTY.
1	1133	Assembly, B/A Upper Ladder	1
2	1122	ladder side bottom fold out #2	2
3	SP2036-5	Step, 15.0 x 1.90	1
4	1126	bottom hinge mount	2
5	1112	Upper mounts	2
6	1115	bottom hinge 1/4	2
7	1132	Assembly, W/A A-Hinge	1

Fig. 5.4. P-1135 assembly instructions.

6. Cost Analysis

This section contains an outline of the costs associated with purchased components, machining costs, welding costs, and assembly costs.

6.1. Component and Material Costs

Table XI gives the cost of all purchased components used in the ladder. These preliminary costs are current as of November 24, 2017 and are not guaranteed to be the same at the time of manufacturing. All costs are provided for one unit, or the lowest order cost available, but it is appropriate to assume that costs may be decreased for higher quantity orders. Note also that shipping costs are not included in the breakdown.

Due to time constraint and industry priority, the team was unable to receive an estimated cost on the bushings from Steeves Agencies and the hardware from Adams Supply. In this case, estimated costs were given and are indicated as such in Table XI.

Purchased components are from suppliers known to FGFT; Adams Supply will supply latches, handrails, and ladder steps. McMaster-Carr is also used as a preliminary supplier and is presented as a worst-case scenario price model; it is expected that a local supplier will be able to provide similar components for the design. Quotes for the aluminum stock material are provided by ASA Alloys in Winnipeg. Laser cutting and bending costs for steel components are provided by N.J. Industries Inc.

N.J. Industries Inc. has extensive capabilities to laser cut and form sheet metal; the company has three laser cutting machines and three CNC brake presses. Based on Shaun Gadient's professional experience, the company offers fast, excellent service and can provide parts with short lead times — same day orders can be filled if needed.

The cost to laser cut all required steel parts is estimated to be $65 CAD [17]. The contact at N.J. Industries Inc. was unable to provide individual pricing for the steel components, but noted that the cost will decrease as the order quantity increases. Based on the company's level of service and the cost for steel components, it is recommended that

TABLE XI.
COST BREAKDOWN

Components / Material	Qty (pc/in)	Source	SKU	Cost (each/per ft) CAD	Total Cost (CAD)
Purchased Parts					
Spring, 302 S.S. Extension	2	McMaster-Carr	94135K26	2.16	4.32
Gas Strut Corrosion Resistant OVL. 26.2"	1	McMaster-Carr	4155T901	92.31	92.31
Bushing 0.63"	2	Steeves Agencies		2.00	4.00
Bushing 0.50"	2	Steeves Agencies		2.00	4.00
Bushing 1.00"	4	Steeves Agencies		2.00	8.00
Bushing 0.75"	2	Steeves Agencies		2.00	4.00
Step, 15.0" x 3.75"	7	Cast Products Inc.		45.28	316.96
Step, 15.0" x 2.00"	1	Cast Products Inc.		28.99	28.99
Sensor	1	Estimate		60	60
04SR12K - Handrail Knurled	13.17	Austin Hardware		8.82	116.13
04SE - End Bracket	4	Austin Hardware		5.2	20.8
04SC - Center Bracket	2	Austin Hardware		5.44	10.88
04SG - Bracket Gasket	8	Austin Hardware		0.58	4.64
				Subtotal	**675.03**
Bolts/Nuts Stainless Steel Grade 8					
1/4" x 1.75"	8	Estimate		1.50	12.00
1/4" x 1.25"	32	Estimate		1.50	48.00
1/4" x 1.50" Counter sunk	4	Adams Supply		1.50	6.00
1/4" x 1.50"	12	Estimate		1.50	18.00
Nut, Nylon Lock 1/4"	56	Estimate		0.33	18.48
Washer, 1/4"	108	Estimate		0.57	61.56
1/2" x 2.00"	4	Estimate		1.92	7.68
1/2" x 1.75"	4	Estimate		1.92	7.68
1/2" x 1.50"	2	Estimate		1.92	3.84
Nut, Nylon Lock 1/2"	10	Estimate		0.33	3.30
Washer, 1/2"	20	Estimate		0.57	11.40
				Subtotal	**197.94**
Aluminium 6061-T6					
Flat Bar, 0.50" x 2.00"	32	ASA		3.85	10.27
Flat Bar, 0.50" x 4.00"	208	ASA		7.95	137.8
Flat Bar, 0.50" x 1.50"	24	ASA		2.16	4.32
				Subtotal	**152.39**
A36 HRS Steel by Part #					
1112	2	N.J. Industries			
1128	1	N.J. Industries			
1134	1	N.J. Industries			
1115	2	N.J. Industries			
1127	2	N.J. Industries			
1129	1	N.J. Industries			
1126	2	N.J. Industries			
				Subtotal	**65.00**
				Total	**1090.36**

FGFT use N.J. Industries Inc. as the supplier for steel components. N.J. Industries Inc. is located at 322 Saulteaux Crescent in Winnipeg, MB and can be contacted by phone at

The total cost of all purchased components is $1,090.30 CAD, however this may be reduced with better part sourcing and higher quantity orders. This quote is for the longest ladder possible, meaning that the cost can be decreased in increments of $45.28 for each fewer step that is required. Additionally, the lengths of the aluminum flat bar will decrease for shorter ladders, requiring less material and thereby further decreasing the cost of the ladder.

6.2. Labour Costs

Table XII uses estimated labour times for each of the engineering and manufacturing processes associated with the ladder, using a labour cost of $72/hour [2]. Labour times are uncertain so an attempt is made to overestimate them to provide a worst-case cost scenario.

TABLE XII.
ESTIMATED LABOUR COSTS

Part #	Description	Quantity	Total Estimated Labour Time (min)	Cost (CAD)
Machining				
1111	Ladder Side	2	60	144.00
1124	Upper Platform	2	30	72.00
1125	Upper Platform	2	15	36.00
1122	ladder side bottom fold out #2	2	30	72.00
			Subtotal	**324.00**
Aluminium Welding				
1130	Assembly, W/A Right side Ladder	1	9.6	11.52
1131	Assembly, W/A Left side Ladder	1	9.6	11.52
Steel Welding				
1132	Assembly, W/A A-Hinge	1	15	18.00
			Subtotal	**41.04**
Assembly				
	Painting		120	144.00
1133	Assembly, B/A Upper Ladder	1	75	90.00
1135	Assembly, B/A Ladder	1	60	72.00
			Subtotal	**306.00**
			Total	**671.04**

The total labour cost is estimated to be $671.04 CAD.

6.3. Cost Summary

The total design cost for the worst case scenario is $1,761.34 CAD. As previously stated, this is the maximum of the cost range for the ladder, and it is appropriate to assume that, given proper order quantities and shorter ladders than the worst-case scenario, the ladder could be manufactured for less than $1,500. For most cases, the ladder can be manufactured in the $1,200-$1,500 cost range specified by FGFT.

7. Summary and Recommendations

The purpose of this design project is to develop a modular rear access ladder design capable of being adapted to a range of different fire truck body designs with minimal engineering effort. The design should be safe for users of the ladder and should allow the ladder to be stowed as close to the body of the fire truck as possible. The conceptual design process has been directed by the list of 26 customer needs and 38 associated technical specifications, outlined in Section 1.4.1 and Section 1.4.2. The needs and specifications were reviewed by the design team and the client, and the most critical ones were incorporated into a House of Quality, shown in Appendix B.

The design team developed seven conceptual designs for the upper ladder section, performed concept screening and scoring to eliminate five options, and evaluated the remaining two concepts. The concept chosen for detailed design was Upper Concept 2. Furthermore, three conceptual designs for the lower ladder section were developed, and on the basis of preliminary evaluation Lower Concept 2 was selected for detailed design. The conceptual design development, and screening, scoring, and selection processes are found in Section 2.

In the detailed design process, recommendations from the client were incorporated to develop the ladder. The top of the upper ladder section is connected to the body of the truck using an A36 HRS connection bracket on both runners. There is an 8" deep platform at the top of the upper ladder section, above the pivot point. The bottom of the upper ladder section is connected to the body of the truck using a bracket connection to an A-frame hinge, which connects to another bracket on the body of the truck. The two brackets and the A-frame hinge are manufactured from A36 HRS. The upper section runner is aluminum 6061-T6, and connects to the ladder steps using bolt connections. The upper section is free to rotate in its two connection brackets to allow it to stow and deploy.

The lower ladder section is connected to the upper ladder section via a hinge point in the same bracket connecting the upper ladder section to the A-frame hinge. The steps are connected to the runner using bolt connections. The ladder is quickly adjustable using the parametric SolidWorks file and the Excel sheet calculator provided to FGFT. Various

bolts, bushings, gas struts, springs, and latches have been recommended to complete the design. Design details can be found in Section 3.

The ladder can be manufactured with minimal welding, and by using local suppliers. Manufacturing and assembly instructions can be found in Section 5.

The design has been validated numerically using SolidWorks finite element analysis and has a total weight of 115.39 lb for the longest possible ladder, with the lower ladder section weighing only 3.23 lb. All components have a minimum factor of safety of 2. It is recommended that the design be prototyped and physically tested to ensure its suitability for FGFT's purposes. The finite element analysis can be found in Section 4.

The cost of the design for the worst-case scenario is expected to be less than $1,500, although it is recommended that FGFT contact its suppliers to ensure that appropriate costs have been used. The cost anaysis can be found in Section 6.

It is also recommended that the feasibility of Upper Concept 3 be reviewed as it was rejected due to its complexity and the limited time available to complete the design process. However, it would provide improved stowed profile space if implemented correctly. Furthermore, it is also recommended that the thickness of the runners in the upper section be reduced; the timeline did not allow for this but the high factor of safety in this component indicates there is room for improvement.

Apart from these recommendations, the ladder and its associated deliverables have been completed and are ready for review by a professional engineer employed by FGFT.

References

[1] Fort Garry Fire Trucks. (2017) *About — Fort Garry Fire Trucks* [Online]. Available: https://www.fgft.com/about/ [24 September 2017].

[2] G. Draskovic (private communication), 19 Sept. 2017.

[3] G. Draskovic. (2017, Jul.) *FGFT UofM IDEA Application Form* [Online]. Available: http://home.cc.umanitoba.ca/~labossip/4860/Projects/Fort%20Garry%20Fire%20Truck%20Application.pdf [September 24, 2017].

[4] Ziamatic Corp. (2017, Jun. 14) *Quic-Ladder Parts and Instruction Manual* [Online]. Available: http://www.ziamatic.com/wp-content/uploads/3096PM1-2.pdf [24 September 2017].

[5] Unknown Ziamatic Co. representative (private communication), 25 Sept. 2017.

[6] Folding Ladder for Concrete Mixer Trucks, by R.E. Christenson. (2004, Mar. 2). Canada Patent 2 457 305 [Online]. Available: http://brevets-patents.ic.gc.ca/opic-cipo/cpd/eng/patent/2457305/summary.html?type=number_search&tabs1Index=tabs1_1 [Oct. 14, 2017].

[7] Hinge and Locking Assembly for a Center-Folding Ladder, by J. Beaver. (2004, Apr. 27). Canada Patent 2 465 252 [Online]. Available: http://brevets-patents.ic.gc.ca/opic-cipo/cpd/eng/patent/2465252/summary.html?type=number_search&tabs1Index=tabs1_1 [Oct. 14, 2017].

[8] MatWeb. (2017) *Aluminum 6061-T6; 6061-T651* [Online]. Available: http://matweb.com/search/DataSheet.aspx?MatGUID=b8d536e0b9b54bd7b69e4124d8f1d20a&ckck=1 [Accessed 11 November 2017].

[9] AZO Materials. (2012) *ASTM A36 Mild/Low Carbon Steel* [Online]. Available: https://www.azom.com/article.aspx?ArticleID=6117 [11 November 2017].

[10] Cast Products Inc. (2017) *Steps - Ladder Rungs* [Online]. Available: http://www.getcpi.com/products/steps-ladder-rungs/ [24 November 2017].

[11] Southco. (2017) *R4 - Rotary Latches* [Online]. Available: https://www.southco.com/en-us/r4-r [19 October 2017].

[12] ——. (2017) *R4 - Rotary Latches* [Online]. Available: https://www.southco.com/en-us/r4-r/r4-0-61352 [28 November 2017].

[13] McMaster-Carr. (2017) *302 Stainless Steel Extension Spring* [Online]. Available: https://www.mcmaster.com/#94135k26/=1afkdsq [22 November 2017].

[14] M. Sitter (private communication), 14 Nov. 2017.

[15] Southco. (2017) *R4 - Rotary Latches* [Online]. Available: https://www.southco.com/static/Literature/r4-r.en.pdf [19 October 2017].

[16] McMaster-Carr. (2017) *Corrosion-Resistant Gas Spring with Chrome-Plated Rod* [Online]. Available: https://www.mcmaster.com/#4155t901/=1afkfhv [22 November 2017].

[17] N. Jay (private communication), 21 Nov. 2017.

UNIVERSITY OF MANITOBA

MECH 4860 — Engineering Design



Ladder Design

Phase III

Appendices



UNIVERSITY OF MANITOBA

TEAM 9: Creative Ladder Innovations for Manitoba

climb

Table of Contents (Appendices)

A Schedule Management **98**

B House of Quality **100**

C Geometry Calculations **102**
C.1 Constants 103
C.1.1 Vertical Constants 103
C.1.2 Horizontal Constants 104
C.1.3 Other Constants 104

D Manufacturing and Assembly Drawings **106**

List of Figures (Appendices)

A.1 Project Gantt chart — key deliverables and summary tasks 99

B.1 Ladder design project House of Quality 101

C.1 Excel spreadsheet used to calculate ladder geometry. 102

D.1 Upper mounting bracket (P-1112) preliminary manufacturing drawing to FGFT standards 107
D.2 A-frame hinge (P-1115) preliminary manufacturing drawing to FGFT standards 108
D.3 Upper section runner (P-1111) preliminary manufacturing drawing to FGFT standards 109
D.4 Lower section runner (P-1122) preliminary manufacturing drawing to FGFT standards 110
D.5 Upper platform support (P-1124) preliminary manufacturing drawing to FGFT standards 111
D.6 Upper platform support (P-1125) preliminary manufacturing drawing to FGFT standards 112
D.7 Lower mounting bracket (P-1126) preliminary manufacturing drawing to FGFT standards 113
D.8 A-frame hinge with weld point (P-1127) preliminary manufacturing drawing to FGFT standards 114
D.9 Upper-lower connection bracket (P-1128, P-1134) preliminary manufacturing drawing to FGFT standards 115
D.10 Support bracket between A-frames (P-1129) preliminary manufacturing drawing to FGFT standards 116
D.11 Preliminary weld sub-assembly drawing (P-1130) of P-1111, P-1124, and P-1125 to FGFT standards 117
D.12 Preliminary weld sub-assembly drawing (P-1131) of P-1111, P-1124, and P-1125 to FGFT standards — opposite side of P-1130 118
D.13 Preliminary weld sub-assembly drawing (P-1132) of P-1127 and P-1129 to FGFT standards 119
D.14 Preliminary sub-assembly drawing for the upper ladder section (P-1133) to FGFT standards 120

D.15 Preliminary assembly drawing of the rear access ladder (P-1135) to FGFT standards 121

A. Schedule Management

The project schedule was created using course deadlines to develop firm project milestones, which were then used to create a task list and Gantt chart. Both documents were split into project phases 1, 2, and 3: Project Definition, Conceptual Design, and Final Design, respectively. This allowed the design team to develop tasks and various levels of sub-tasks.

The Gantt chart is a living document developed in Microsoft Project. A high-level Gantt chart is shown in Figure A.1. Relationships between tasks are shown with arrows on the chart. The project start date is September 14, and major project deliverables are the submissions of the Project Definition Report, the Conceptual Design Report, and the Final Design Report. Individual deadlines for peer evaluation submissions are also included. The project end date is December 8; the last major deliverable is the presentation evening on December 7. The project has been successfully completed according to schedule.

ID	Task Mode	Task Name	Start	Finish	Duration	Free Slack	Total Slack
1		**Phase I**	**Thu Sep 14**	**Mon Oct 02**	**18.38 days**	**0 days**	**0 days**
2		**Project Management P1**	**Thu Sep 14**	**Thu Sep 28**	**14 days**	**0 days**	**0 days**
7		**Define Project Scope**	**Tue Sep 19**	**Wed Sep 27**	**8.1 days**	**0 days**	**0 days**
15		**Write Project Definition Report**	**Tue Sep 19**	**Sun Oct 01**	**12.38 days**	**0 days**	**0 days**
20		**PDR Oral Presentation**	**Thu Sep 28**	**Mon Oct 02**	**4 days**	**0 days**	**0 days**
25		Submit PDR	Mon Oct 02	Mon Oct 02	0 days	0 days	0 days
26		**Phase II**	**Mon Oct 02**	**Wed Nov 01**	**29.63 days**	**0 days**	**0 days**
27		**Project Management P2**	**Wed Oct 04**	**Wed Oct 11**	**7 days**	**0 days**	**0 days**
30		**Concept Generation**	**Mon Oct 02**	**Tue Oct 24**	**21.63 days**	**0 days**	**0 days**
43		**Write Conceptual Design Report**	**Mon Oct 02**	**Sun Oct 22**	**20 days**	**0 days**	**0 days**
49		Review Phase 2 Work with Advisor	Sun Oct 22	Sun Oct 22	0 days	0 days	0 days
50		Send CDR to Client for Approval	Tue Oct 24	Tue Oct 24	0 days	0 days	0 days
51		Final Review of CDR	Sun Oct 22	Fri Oct 27	5 days	0 days	0 days
52		Submit CDR	Fri Oct 27	Fri Oct 27	0 days	0 days	0 days
53		Submit Peer Evaluation 2 (individua	Mon Oct 30	Mon Oct 30	0 days	0 days	0 days
54		Submit Gantt Chart and Meeting Minutes Copy to TA #2	Wed Nov 01	Wed Nov 01	0 days	0 days	0 days
55		**Phase III**	**Fri Oct 27**	**Fri Dec 08**	**41.63 days**	**0 days**	**0 days**
56		**Specify Final Design and "Dimensic**	**Fri Oct 27**	**Fri Nov 03**	**6.63 days**	**0 days**	**0 days**
67		Client Approval on Final Design	Fri Nov 03	Fri Nov 03	0 days	0 days	0 days
68		**Design Optimization**	**Fri Nov 03**	**Mon Nov 13**	**10 days**	**0 days**	**0 days**
74		**Finalize Design**	**Mon Nov 13**	**Thu Nov 16**	**3.5 days**	**0 days**	**0 days**
79		**Prepare Manufacturing Instruction**	**Mon Nov 06**	**Wed Nov 08**	**2 days**	**0 days**	**0 days**
82		**Perform Cost-Benefit Analysis**	**Wed Nov 08**	**Fri Nov 10**	**2 days**	**0 days**	**0 days**
85		**Write Final Design Report**	**Fri Oct 27**	**Wed Dec 06**	**39.63 days**	**0 days**	**0 days**
97		**Create Poster**	**Wed Nov 08**	**Thu Dec 07**	**29 days**	**0 days**	**0 days**
102		**Final Presentation**	**Wed Nov 08**	**Thu Dec 07**	**29 days**	**0 days**	**0 days**
108		Submit Peer Evaluation 3	Fri Dec 08	Fri Dec 08	0 days	0 days	0 days

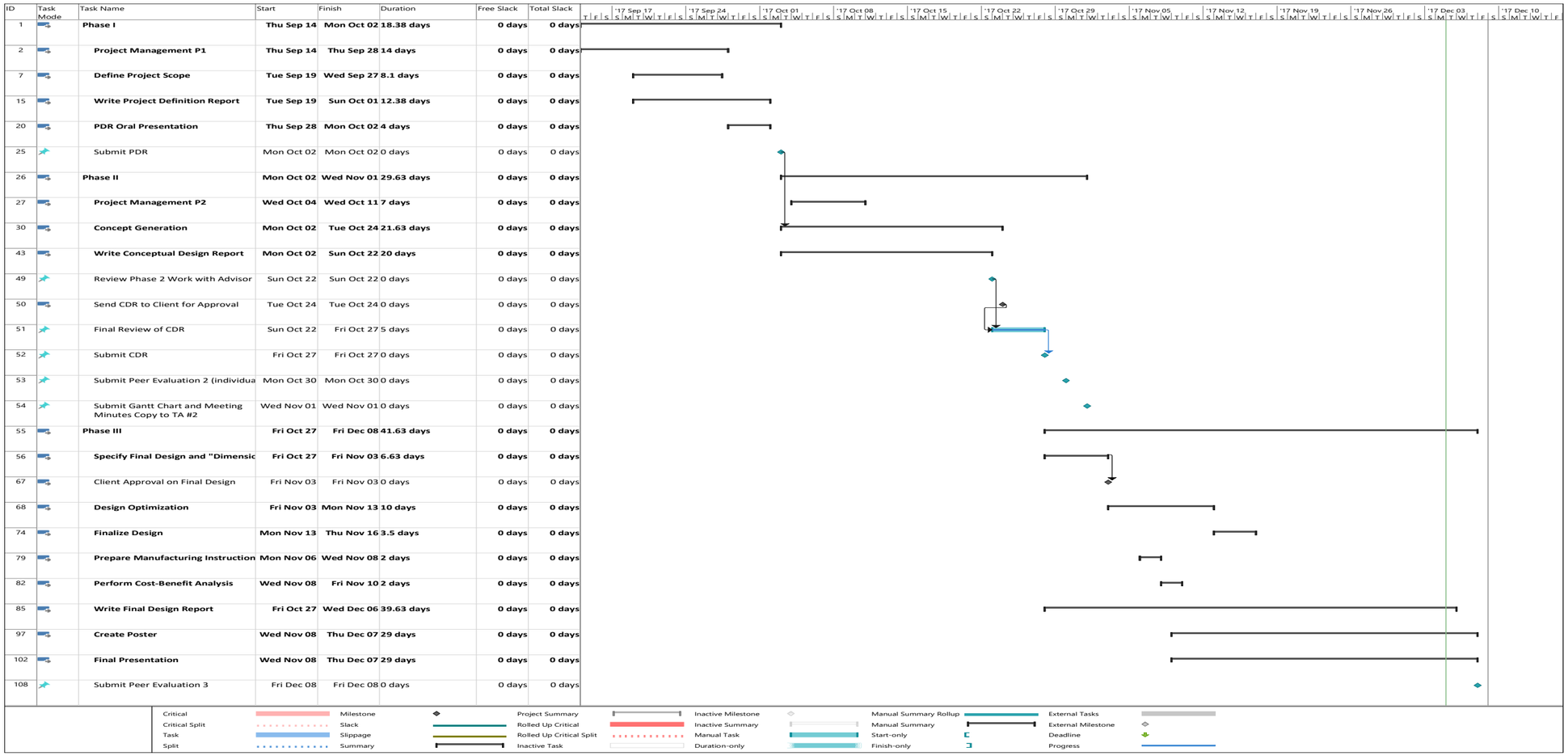

Fig. A.1. Project Gantt chart — key deliverables and summary tasks

B. House of Quality

The most important needs and their associated specifications and metrics were grouped together in a House of Quality, using the ladder design from Ziamatic Corp as a benchmark. The HOQ is shown in Figure B.1. Based on the relative weight calculation, the safety of the ladder's user should be the top priority. Following this, other critical design needs are the stowed ladder profile and the clearance between the bottom step and the ground.

Title: _____

Author: _____

Date: _____

Notes: _____

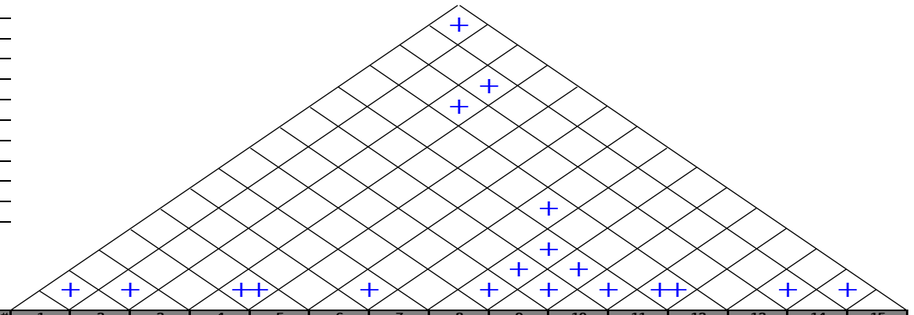

Legend		
⊙	Strong Relationship	9
○	Moderate Relationship	3
▲	Weak Relationship	1
+++	Strong Positive Correlation	
+	Positive Correlation	
—	Negative Correlation	
▼▼	Strong Negative Correlation	
▼	Objective Is To Minimize	
▲	Objective Is To Maximize	
×	Objective Is To Hit Target	

Row #	Max Relationship Value in Row	Relative Weight	Weight / Importance	Quality Characteristics (a.k.a. "Functional Requirements" or "Hows") / Demanded Quality (a.k.a. "Customer Requirements" or "Whats")	Column #	1	2	3	4	5	6	7	8	9	10	11	12	13	14	15	Competitive Analysis (0=Worst, 5=Best)					
					Direction of Improvement: Minimize (▼), Maximize (▲), or Target (x)	×	×	▼			▲	▲	▲	▲	×	×	×	×	×	×	CLIMB	Ziamatic	Competitor 2	Competitor 3	Competitor 4	Competitor 5
						Vertical distance between bottom step and ground	State load is supported	Time to modify ladder design for different fire trucks	Jolting of the fire truck in transit will not cause the ladder to dislodge	Indicator light in the cab indicates when the ladder is deployed	Slip resistance on steps in any orientation when tested wet using the English XL tester	Slip-resistant handrail	User is protected from sharp edges in normal operation	In normal operation, user is protected from pinch points	Three stable points of contact are available at any point when using the ladder	Clearance between handrail and any other surface	Handrail diameter	Horizontal distance between body of fire truck and furthest ladder component when stowed	Horizontal distance between leading edge of each step (excluding bottom) and body of fire truck	Vertical distance between any two steps on the ladder (excluding ground to bottom)						
1	9	16.4	9.0	The ladder allows clearance b/w the ground and the truck when truck is fully loaded		⊙															5	3				
2	9	3.6	2.0	The ladder can be placed on a variety of fire truck models		○		⊙													4	1				
3	9	14.5	8.0	The ladder deploys normally and is safe when icy							⊙	⊙									5	4				
4	9	10.9	6.0	The ladder has a minimized profile when stowed														⊙			4	2				
5	9	18.2	10.0	The ladder is safe			⊙			⊙	⊙	⊙	⊙	⊙							5	5				
6	9	12.7	7.0	The ladder provides the user with three point of contact											⊙	⊙	○				5	5				
7	9	7.3	4.0	The ladder remains stowed while the fire truck is in motion					⊙	⊙											5	5				
8	9	9.1	5.0	The ladder allows clearance b/w each step and the body of the fire truck															⊙		5	4				
9	9	5.5	3.0	The ladder allows comfortable climbing		▲	▲				○	▲					○		○	⊙	5	4				
10	9	1.8	1.0	The ladder can be maintained with readily available tools and supplies				⊙		▲											4	4				
				Target or Limit Value		18	3217 lbf	600 sec	Pass	Pass	>0.75	Pass	Pass	Pass	Pass	3 in	1-1.625 in	<8 in	>=8 in	18 in						
				Difficulty (0=Easy to Accomplish, 10=Extremely Difficult)																						
				Max Relationship Value in Column		9	9	9	9	9	9	9	9	9	9	9	3	9	9	9						
				Weight / Importance		163.6	169.1	49.1	65.5	230.9	310.9	300.0	163.6	163.6	114.5	114.5	54.5	98.2	98.2	49.1						
				Relative Weight		7.6	7.9	2.3	3.1	10.8	14.5	14.0	7.6	7.6	5.3	5.3	2.5	4.6	4.6	2.3						

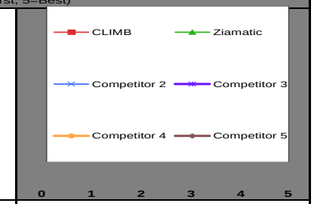

Powered by QFD Online (http://www.QFDOnline.com)

Fig. B.1. Ladder design project House of Quality

C. Geometry Calculations

The global variables used in the SolidWorks file to adjust the ladder for various fire truck designs are calculated using the Excel Geometry calculator with the file name Ladder Calculator.xlsx. The calculator uses two values input by the user to calculate the step spacing measured along the ladder, the total number of steps, and the lengths of aluminum flat bar required for the upper and lower ladder sections. The calculator is shown in Figure C.1.

	A	B	C	D	E	F	G	H	I	J	K	L	M	N	O	P	Q
1	*All dimensions in inches unless otherwise specified*					Valid Geometry											
2	*Uses deployed ladder geometry*																
3	**Enter Design Values Here**				**Calculated Values**				**Vertical Position of Upper Section Steps**				**Vertical Position of Lower Section Steps**				
4	Total Height				# Steps Upper (#)				Step No.		Y Location		Step No.		Y Location		
5	T height				# Steps Lower (#)				0				-1				
6	**Vertical Constants**				Climb Angle (Rads)				1				-2				
7	G-Y1		5.00		Climb Angle (Rads)				2				-3				
8	Y1-Y2		4.00		Climb Angle (Deg)				3				-4				
9	Pivot-top platform		3.72		H2				4				-5				
10	Bottom to A-frame		12.00		H1				5				-6				
11	Lower Section Step Thickness		1.50		**Calculated Vertical Geometries**				6				-7				
12	Y2-top		8.00		Y1				7				-8				
13	**Horizontal Constants**				Y2				8				-9				
14	Xtop		7.5		R												
15	Xbottom		19.625		Ground to First Step												
16	**Other Constants**				Ylu				SolidWorks File Inputs				Verification:				
17	Pivot to Top of Upper Flat Bar		3.5		Yend				RL				Vertical Point of Upper-Lower Connection				
18	Pivot to Bottom of Upper Flat Bar		4		Y1,actual				N (Total # Steps)								
19	Pivot to Top of Lower Flat Bar		1						L1				Actual Vertical Point of Upper-Lower Connection				
20	Centre to Centre of U-L Connection		3.25						L2								
21	Lower Section Flat Bar Thickness		2										Total Height				

Fig. C.1. Excel spreadsheet used to calculate ladder geometry.

To use the calculator, the designer should enter values in cells C4 and C5, corresponding to the total fire truck climbing height and the tire height, respectively. The cells in the G column will automatically update, as will the cells in the K and O columns. Lastly, the SolidWorks File Inputs will be updated, and the designer can then update the geometry of the access ladder model.

C.1. Constants

The constants are found in column C, from row 7 to row 21. They are dependent on geometry features selected by the design team. The constants are split into vertical constants, horizontal constants, and other constants. The constants are applicable when the ladder is in the fully deployed position. As such, any changes to the constants should be made when the ladder is in the fully deployed position.

C.1.1. Vertical Constants

The vertical constants are measured in inches, and are described here in the descending order they appear in Figure C.1.

G-Y1

Preliminary vertical distance from the ground to the bottom of the lower ladder section. Default value is 5".

Y1-Y2

Vertical distance between the measurements of Y1 and Y2. Default value is 4" to ensure there is an offset between the first step of the upper section and the upper-lower connection bracket.

Pivot-top Platform

Vertical distance from the centre of the top pivot point to the top of the ladder platform. Default value is 3.72", based on the pivot point location relative to the thickness of the top platform's thickness.

Bottom to A-frame

Vertical distance from the bottom of the truck to the centre of the lower pivot point hole. Default value is 12", which gives an offset between the A-frame hinge and the bumper of the fire truck, both horizontally and vertically.

Lower Section Step Thickness

Vertical thickness of the steps in the lower ladder section. Default value is 1.5".

Y2-top

Vertical distance from the top of the ladder platform to the top of the truck, measured to the point the ladder user would step on to the top of the truck.

C.1.2. Horizontal Constants

The horizontal constants are measured in inches, and are described here in the descending order they appear in Figure C.1.

Xtop

Horizontal distance measured from the body of the fire truck to the centre of the upper bracket's pivot hole. Default value is 7.5", based on the upper bracket geometry.

Xbottom

Horizontal distance measured from the body of the fire truck to the centre of the A-frame hinge's pivot hole. Default value is 19.625", based on the lower bracket geometry and A-frame hinge geometry.

C.1.3. Other Constants

The other constants are measured in inches, and are described here in the descending order they appear in Figure C.1.

Pivot to Top of Upper Flat Bar

Distance measured along the upper flat bar between the centre of its top pivot hole and the top of the flat bar. Default value is 3.5" based on the geometry of the flat bar and location of the pivot hole.

Pivot to Bottom of Upper Flat Bar

Distance measured along the upper flat bar between the centre of its Bottom pivot hole and the bottom of the flat bar. Default value is 4" based on the geometry of the flat bar and location of the pivot hole.

Pivot to Top of Lower Flat Bar

Distance measured along the lower flat bar between the centre of its top pivot hole and the top of the lower flat bar. Default value is 1" based on the geometry of the flat bar and location of the pivot hole.

Centre to Centre of U-L Connection

Centre-to-centre distance between the two pivot holes on the upper-lower connection bracket. Default value is 3.25" based on the geometry of the component.

Lower Section Flat Bar Thickness

The thickness of the lower section flat bar. Default value is 2" based on the geometry of the component.

D. Manufacturing and Assembly Drawings

This appendix contains preliminary manufacturing and assembly drawings that have been prepared for Fort Garry Fire Trucks. The upper and lower mounting bracket drawings are shown in Figure D.1 and Figure D.7, respectively. The A-frame hinge link drawings are shown in Figure D.2 and Figure D.8 and Figure D.2. Upper and lower ladder runner drawings are displayed in Figure D.3 and Figure D.4.

The upper platform supports are shown in Figure D.5 and Figure D.6. The upper platform support welds are shown in Figure D.11 and Figure D.12.

The A-frame support bracket is shown in Figure D.10 and its welds to the A-frame links are shown in Figure D.13. The upper-lower connection bracket is shown in Figure D.9.

Lastly, the sub-assembly and assembly drawings for the ladder are shown in Figure D.14 and Figure D.15, respectively.

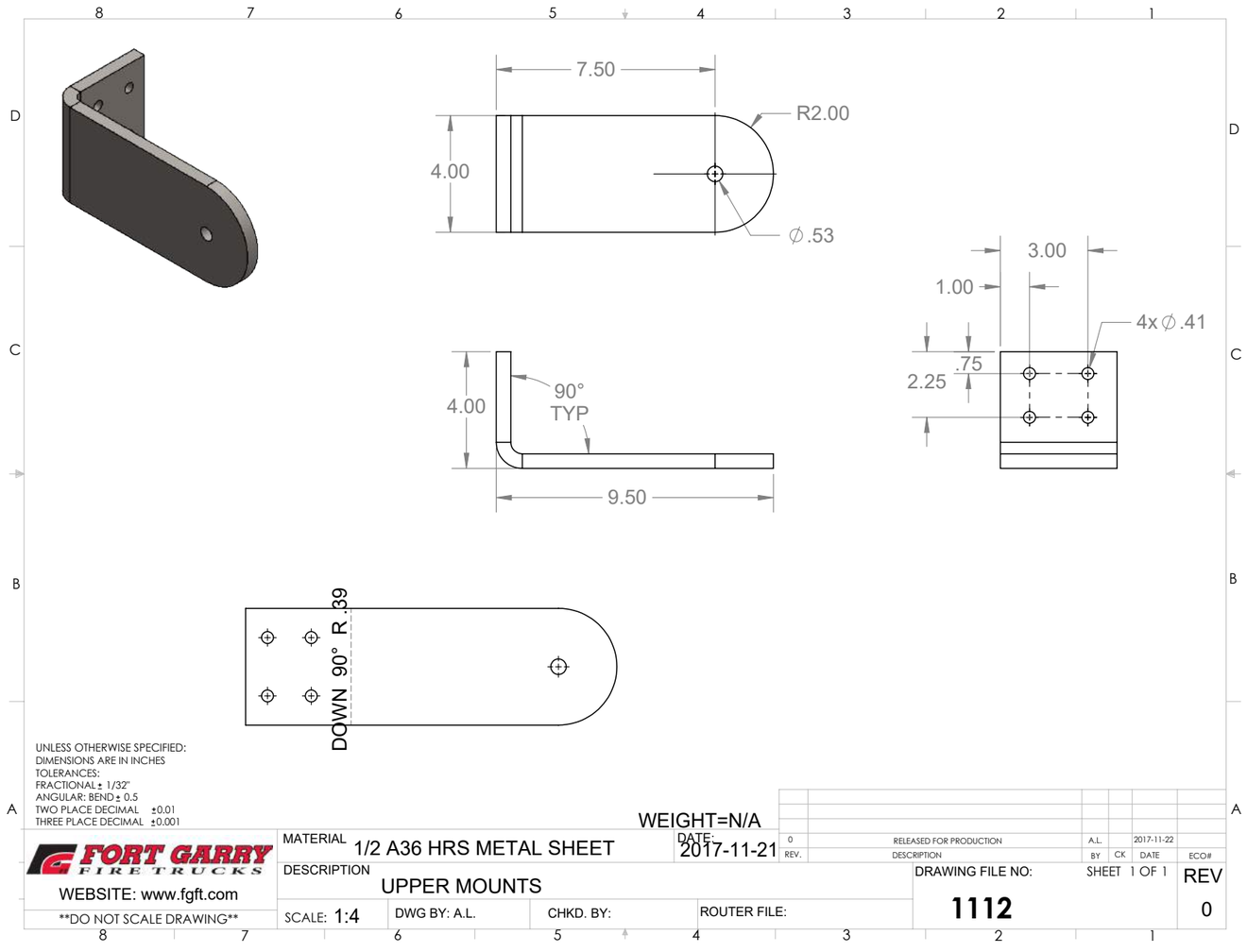

Fig. D.1. Upper mounting bracket (P-1112) preliminary manufacturing drawing to FGFT standards

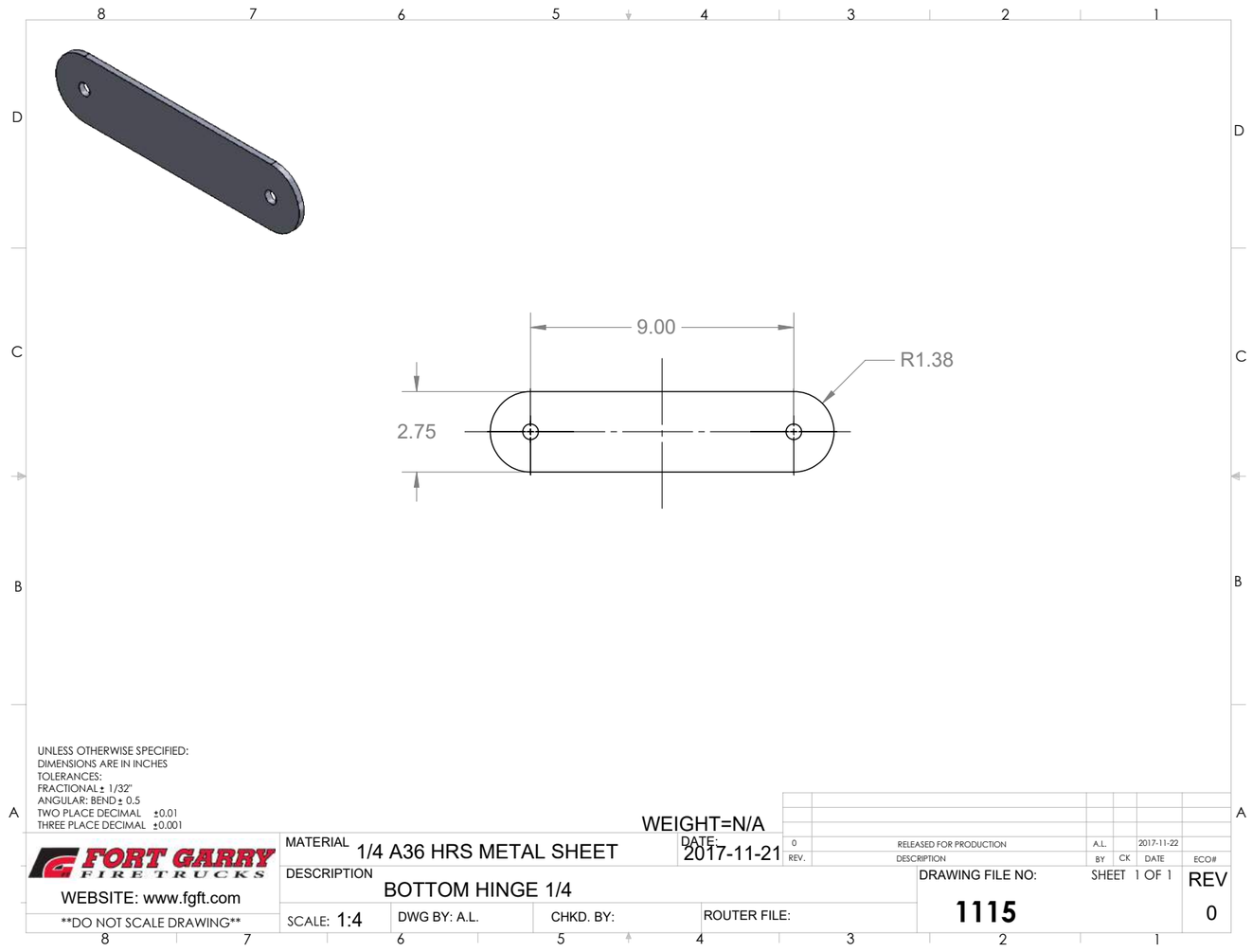

Fig. D.2. A-frame hinge (P-1115) preliminary manufacturing drawing to FGFT standards

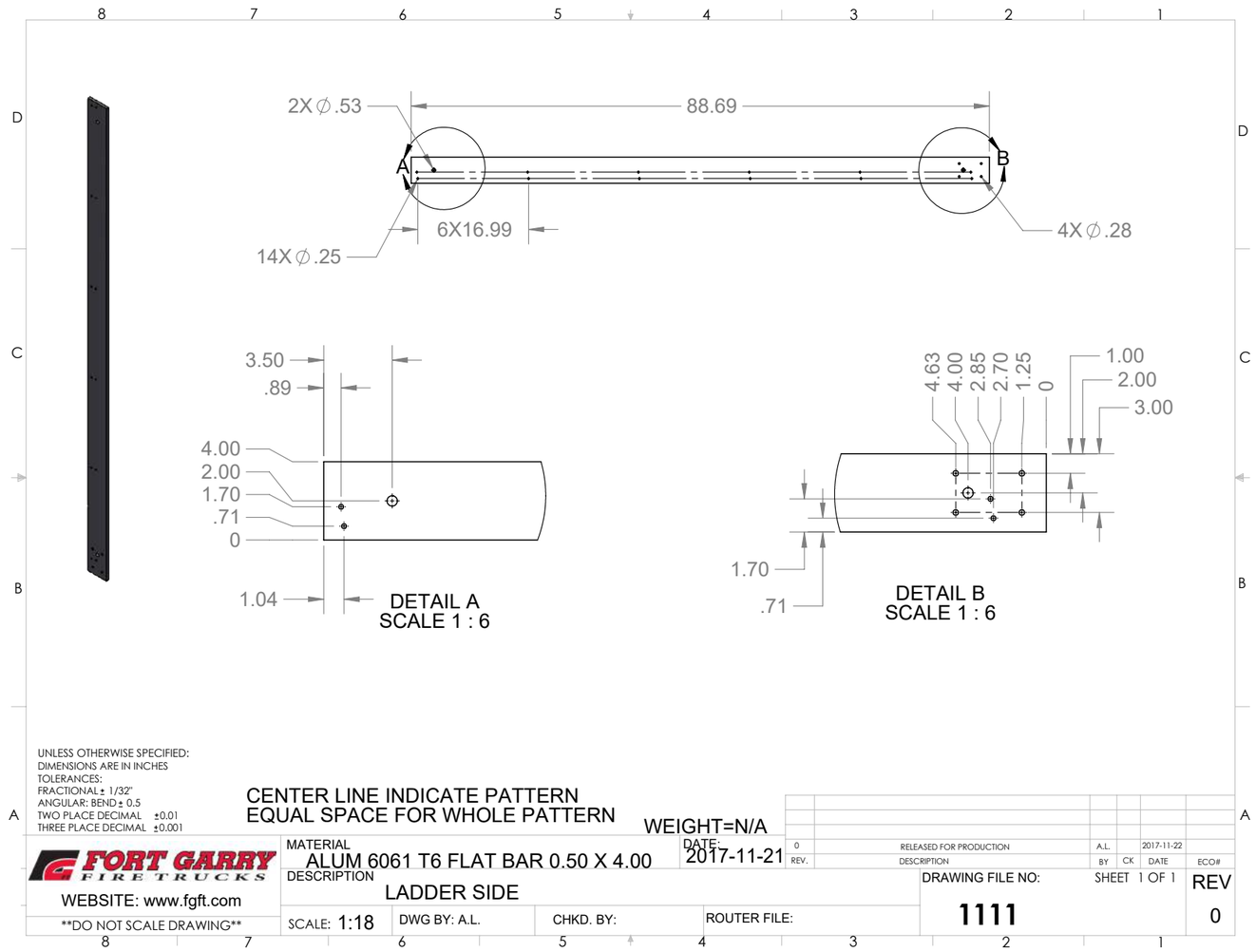

Fig. D.3. Upper section runner (P-1111) preliminary manufacturing drawing to FGFT standards

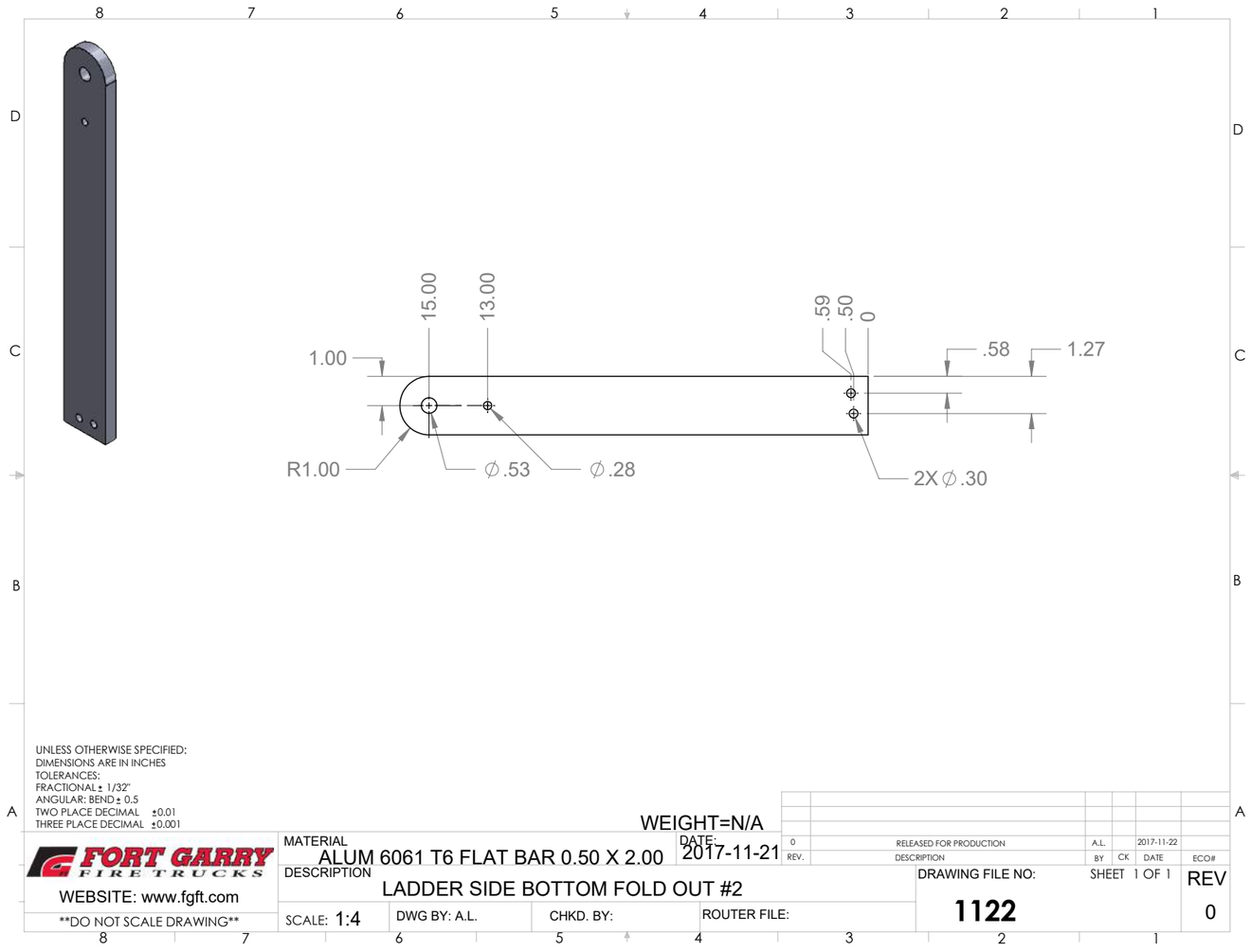

Fig. D.4. Lower section runner (P-1122) preliminary manufacturing drawing to FGFT standards

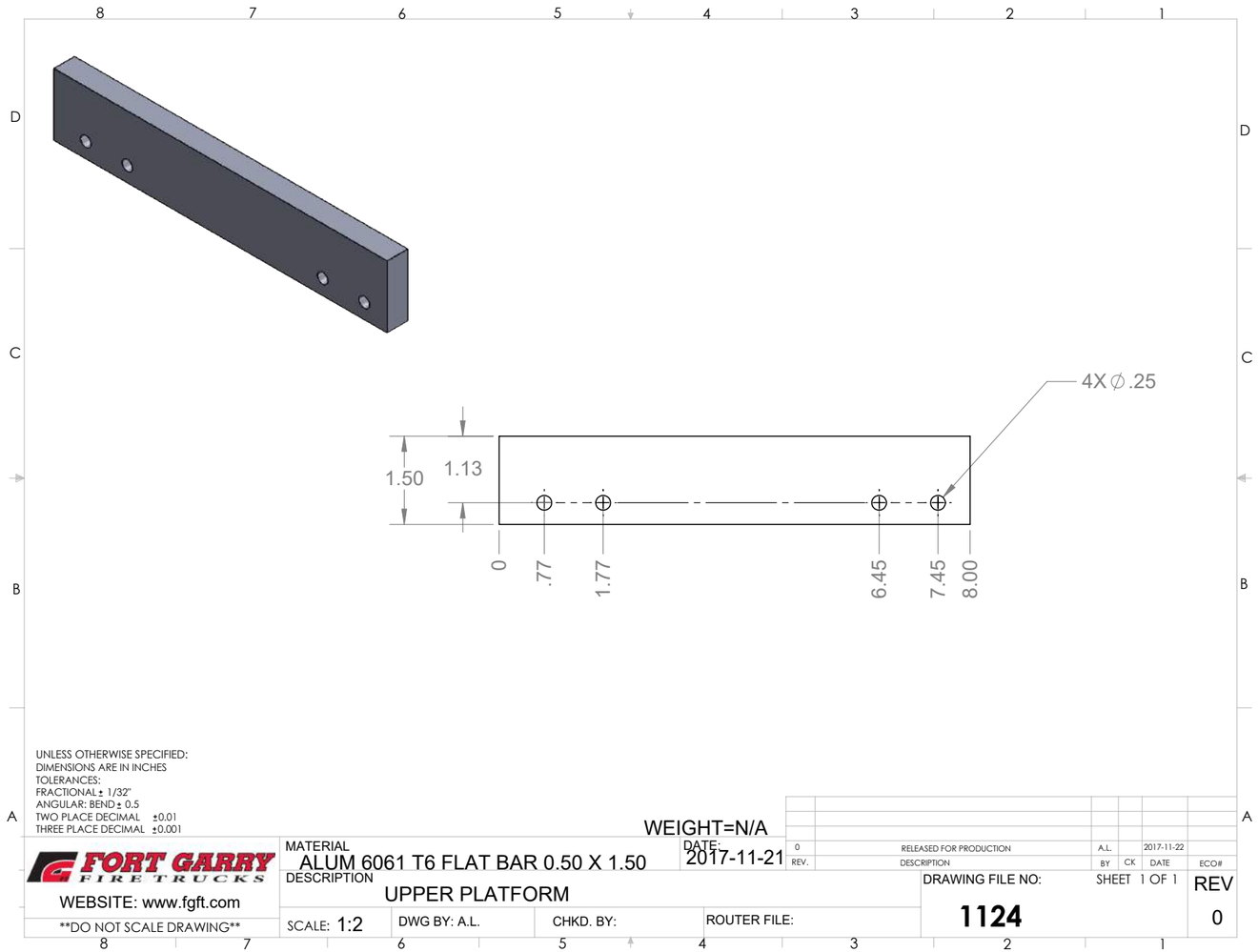

Fig. D.5. Upper platform support (P-1124) preliminary manufacturing drawing to FGFT standards

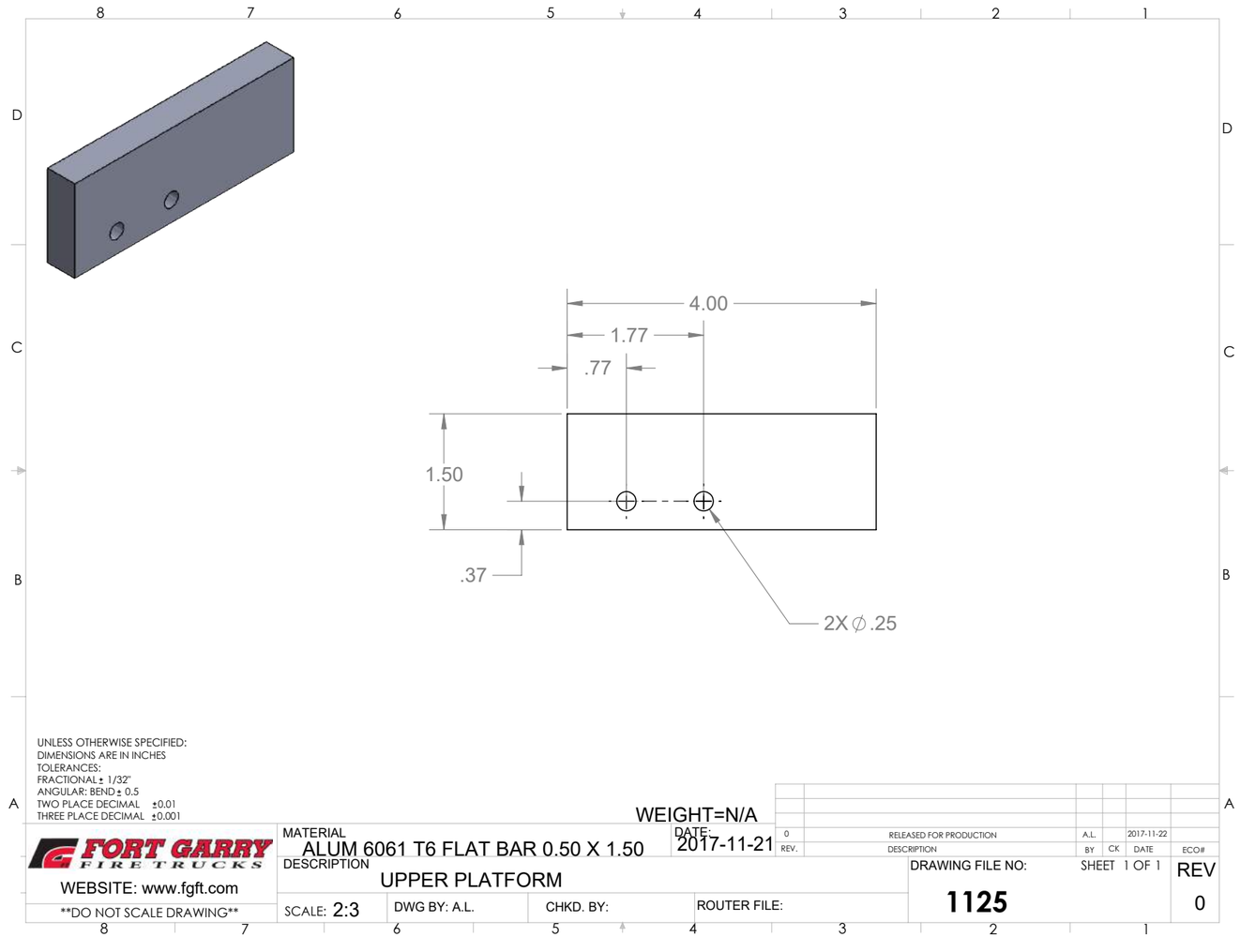

Fig. D.6. Upper platform support (P-1125) preliminary manufacturing drawing to FGFT standards

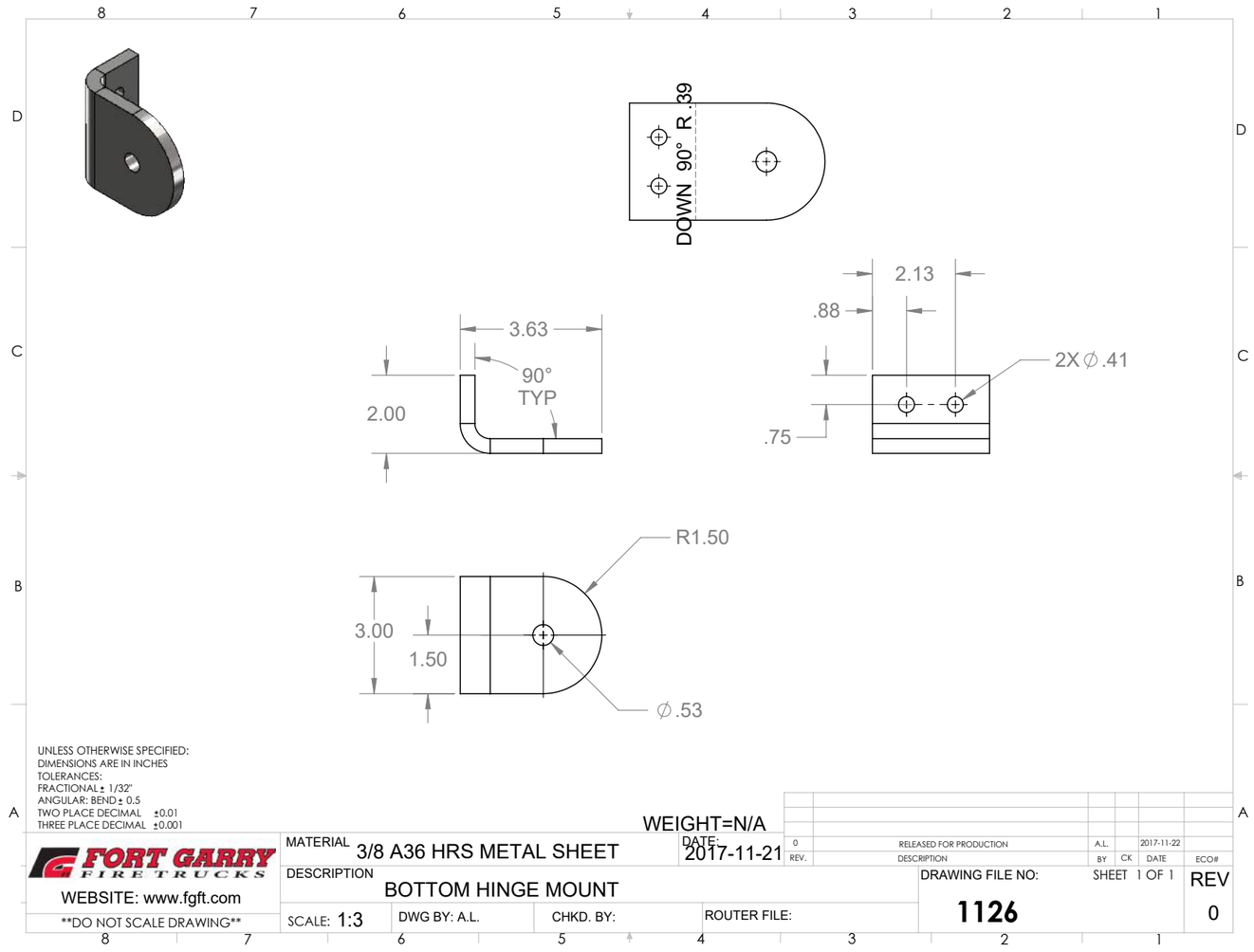

Fig. D.7. Lower mounting bracket (P-1126) preliminary manufacturing drawing to FGFT standards

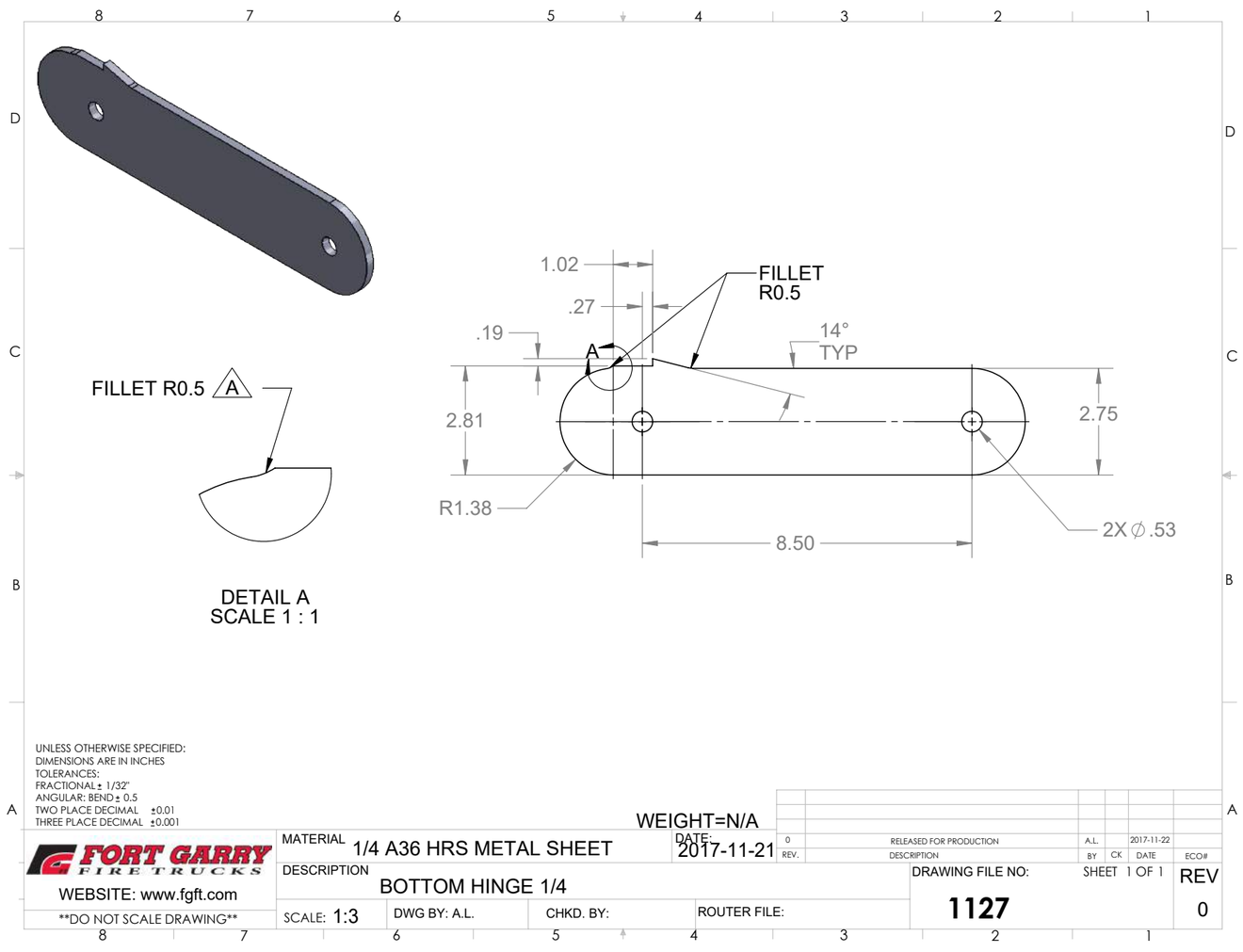

Fig. D.8. A-frame hinge with weld point (P-1127) preliminary manufacturing drawing to FGFT standards

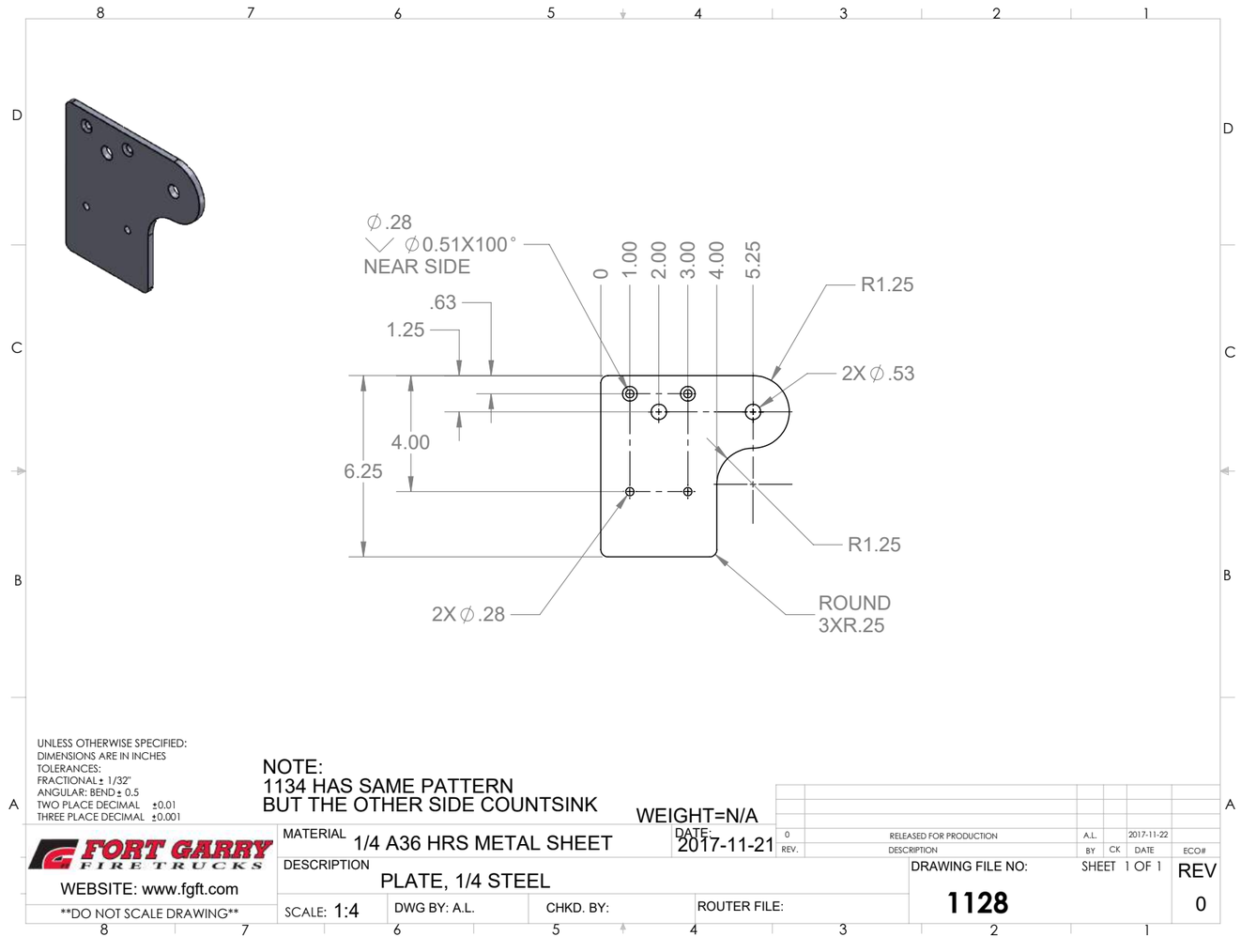

Fig. D.9. Upper-lower connection bracket (P-1128, P-1134) preliminary manufacturing drawing to FGFT standards

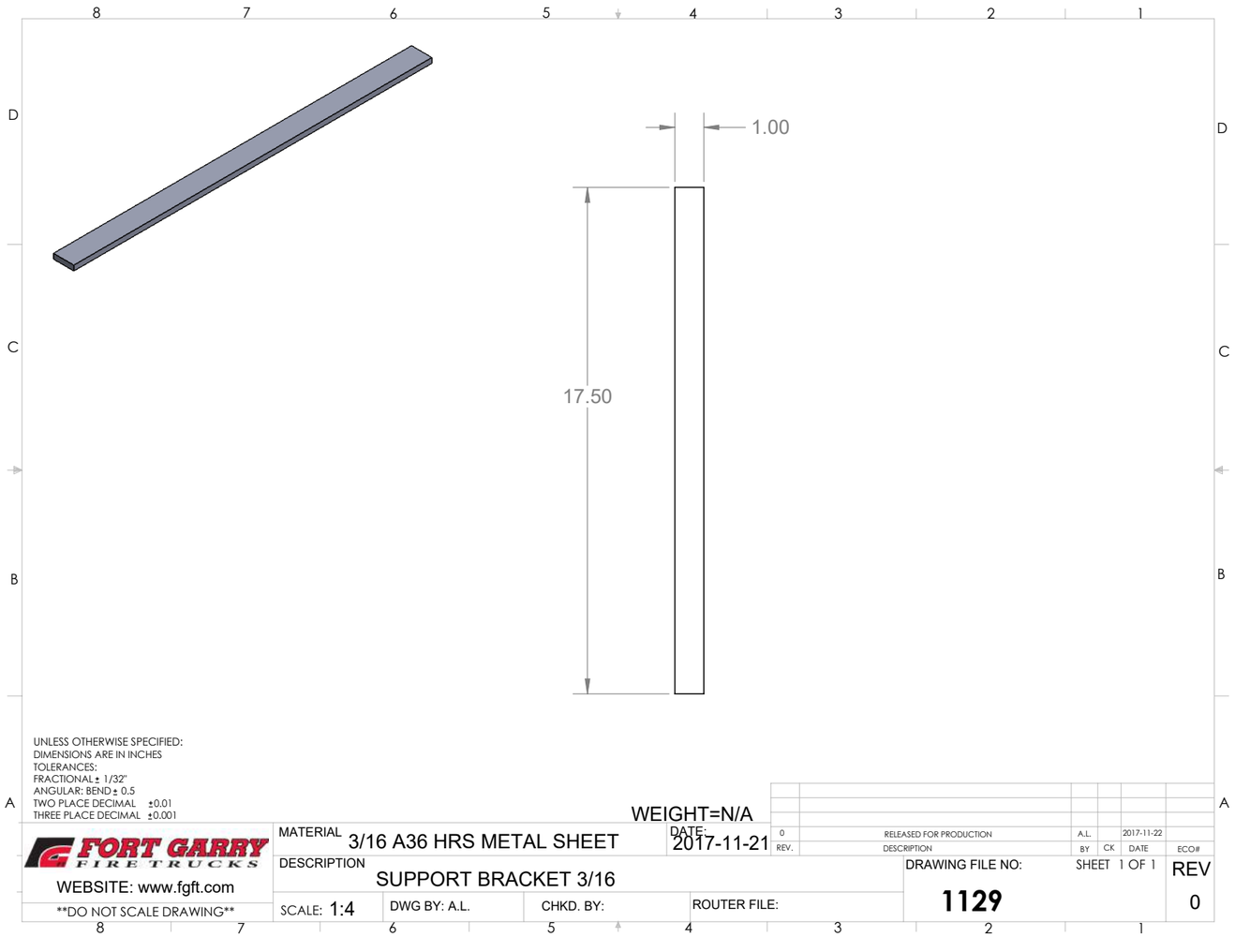

Fig. D.10. Support bracket between A-frames (P-1129) preliminary manufacturing drawing to FGFT standards

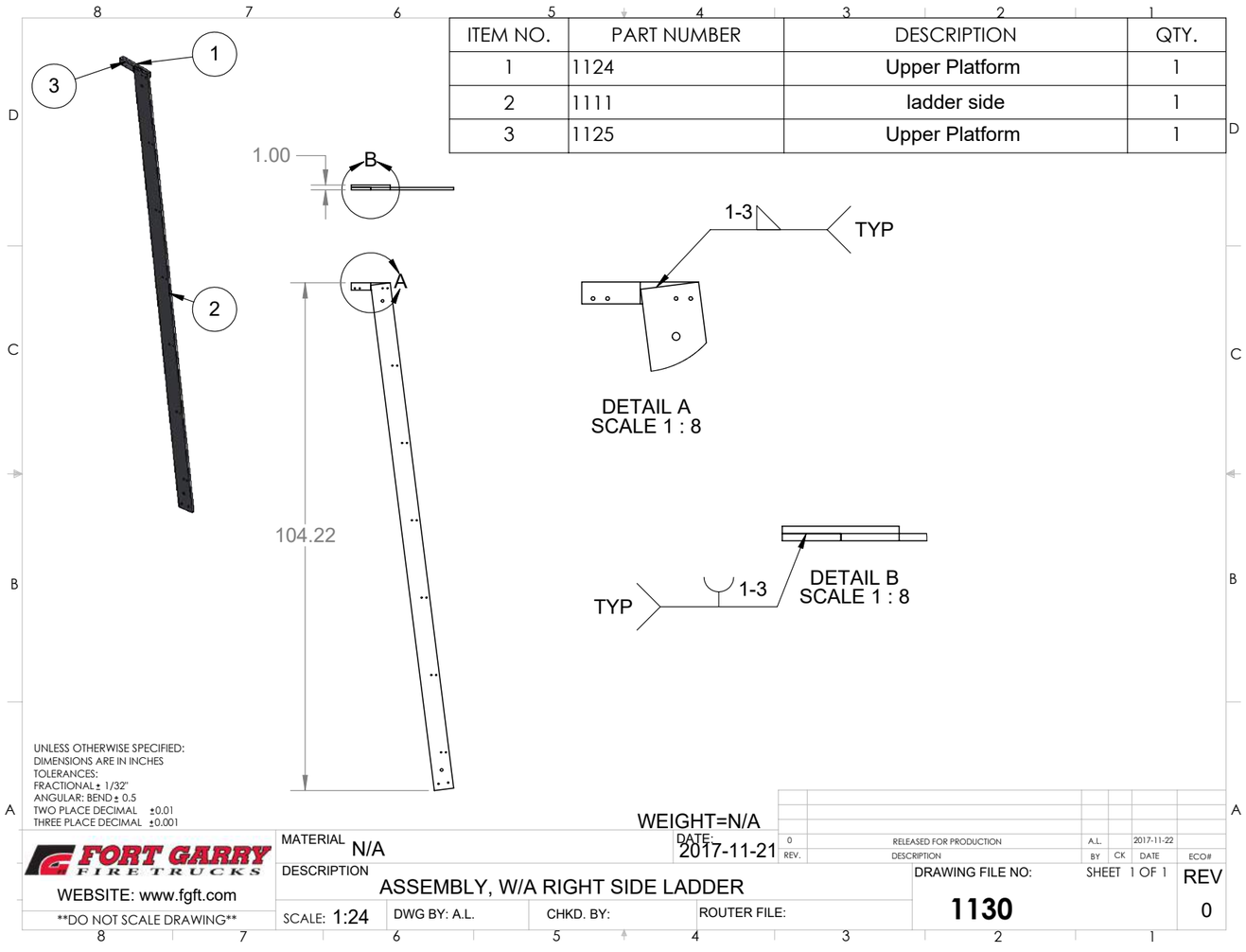

Fig. D.11. Preliminary weld sub-assembly drawing (P-1130) of P-1111, P-1124, and P-1125 to FGFT standards

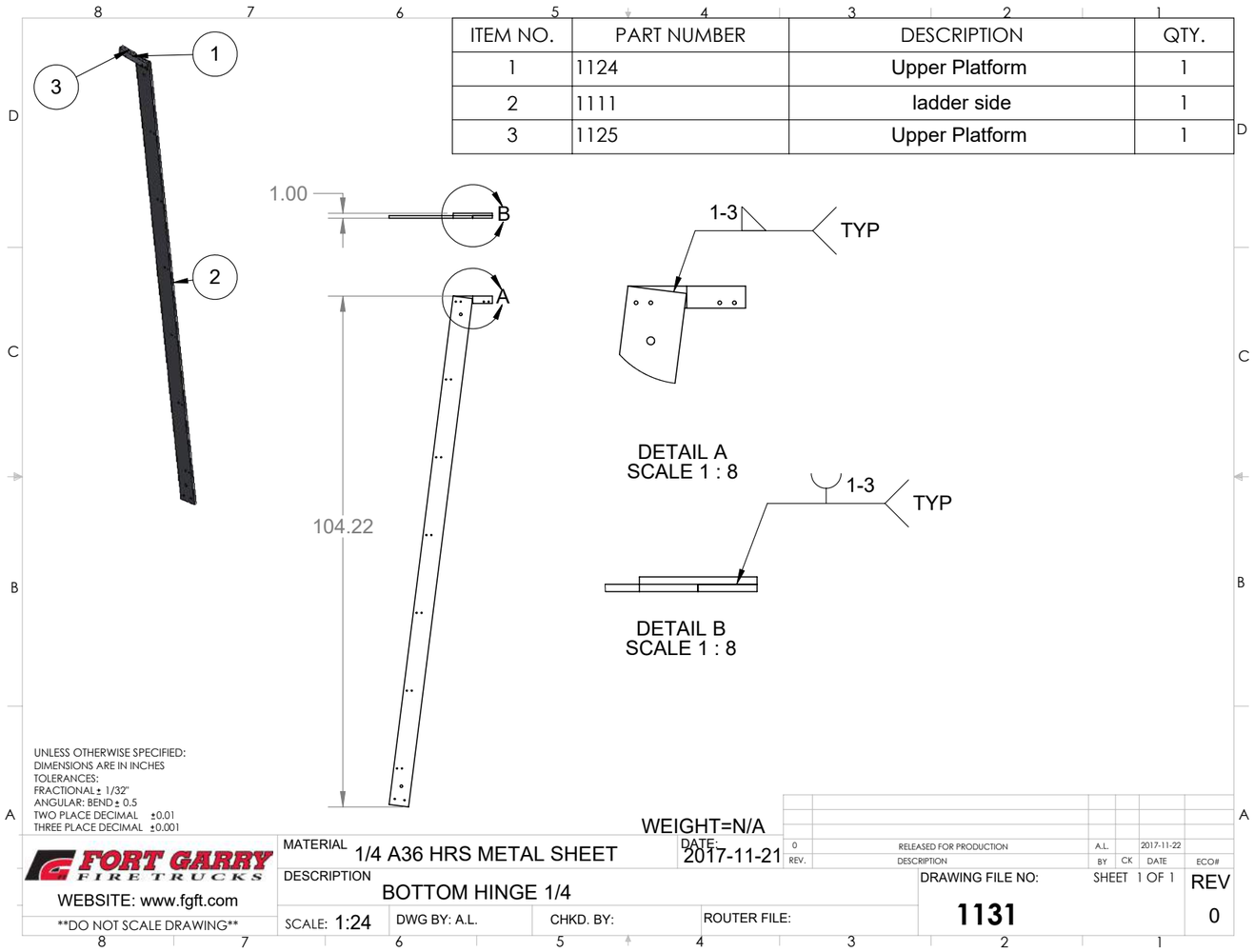

Fig. D.12. Preliminary weld sub-assembly drawing (P-1131) of P-1111, P-1124, and P-1125 to FGFT standards — opposite side of P-1130

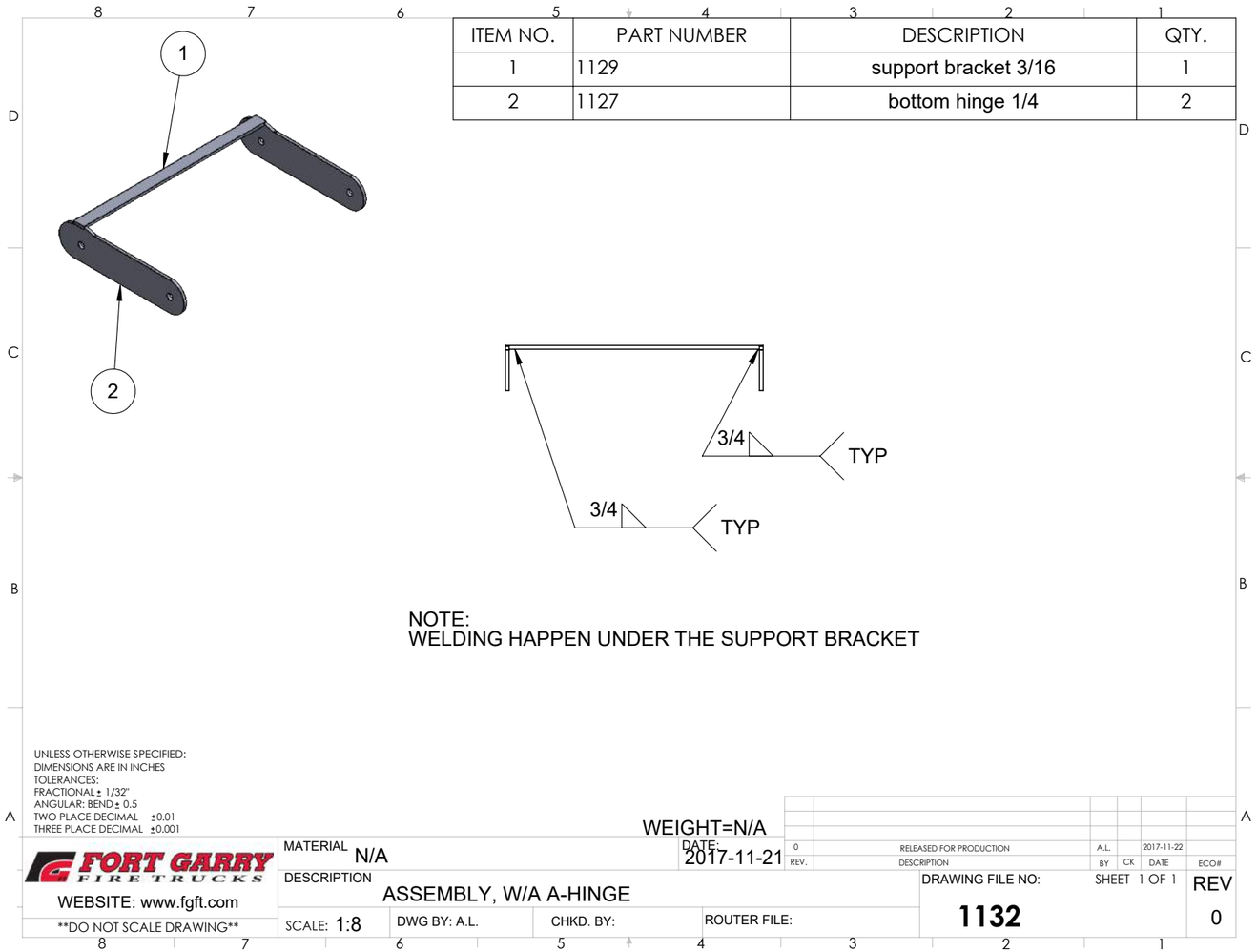

ITEM NO.	PART NUMBER	DESCRIPTION	QTY.
1	1129	support bracket 3/16	1
2	1127	bottom hinge 1/4	2

Fig. D.13. Preliminary weld sub-assembly drawing (P-1132) of P-1127 and P-1129 to FGFT standards

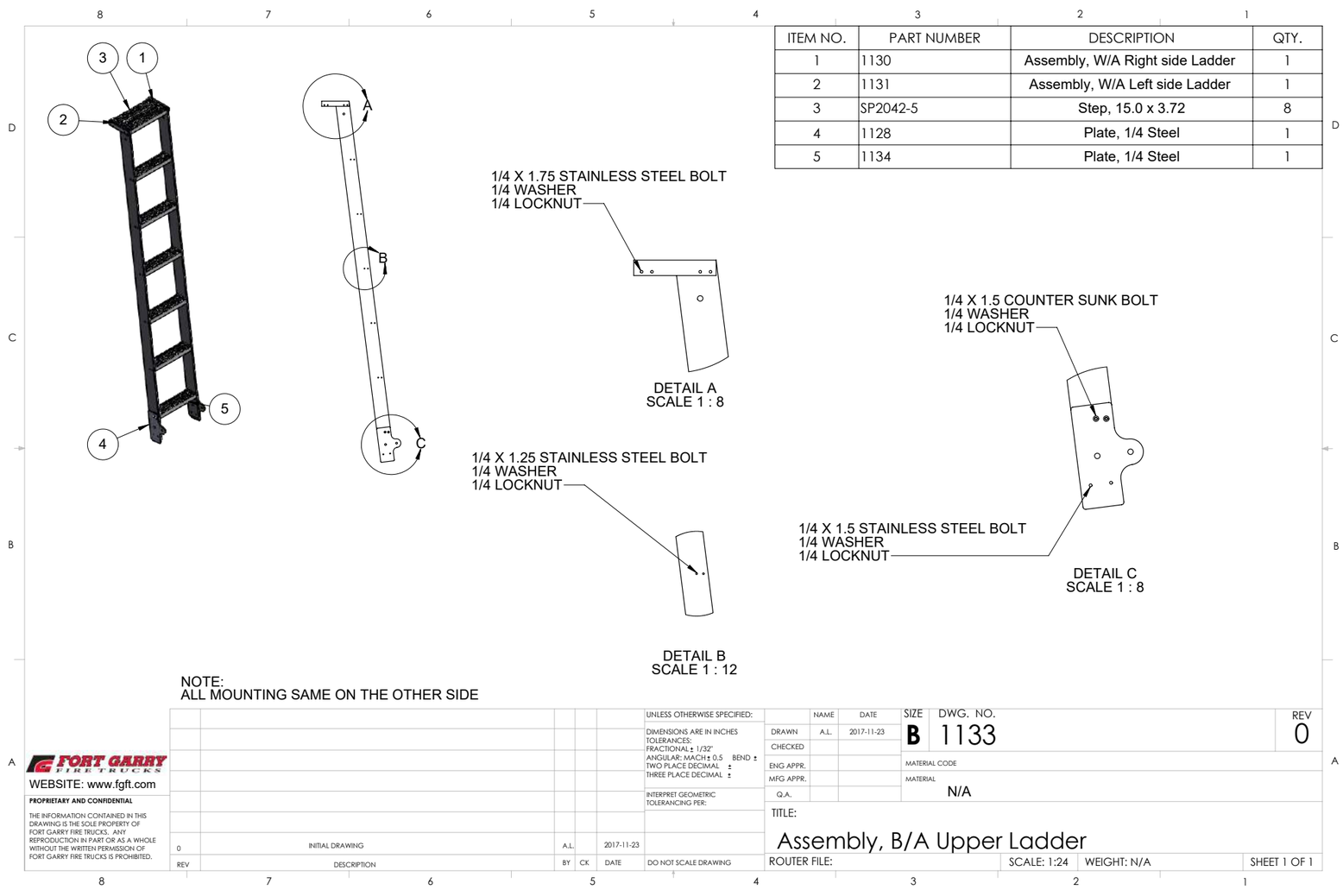

ITEM NO.	PART NUMBER	DESCRIPTION	QTY.
1	1130	Assembly, W/A Right side Ladder	1
2	1131	Assembly, W/A Left side Ladder	1
3	SP2042-5	Step, 15.0 x 3.72	8
4	1128	Plate, 1/4 Steel	1
5	1134	Plate, 1/4 Steel	1

REV	DESCRIPTION	BY	CK	DATE
0	INITIAL DRAWING	A.L.		2017-11-23

FORT GARRY FIRE TRUCKS
WEBSITE: www.fgft.com

PROPRIETARY AND CONFIDENTIAL
THE INFORMATION CONTAINED IN THIS DRAWING IS THE SOLE PROPERTY OF FORT GARRY FIRE TRUCKS. ANY REPRODUCTION IN PART OR AS A WHOLE WITHOUT THE WRITTEN PERMISSION OF FORT GARRY FIRE TRUCKS IS PROHIBITED.

UNLESS OTHERWISE SPECIFIED:
DIMENSIONS ARE IN INCHES
TOLERANCES:
FRACTIONAL ± 1/32"
ANGULAR: MACH ± 0.5 BEND ±
TWO PLACE DECIMAL ±
THREE PLACE DECIMAL ±
INTERPRET GEOMETRIC TOLERANCING PER:
DO NOT SCALE DRAWING

	NAME	DATE
DRAWN	A.L.	2017-11-23
CHECKED		
ENG APPR.		
MFG APPR.		
Q.A.		

SIZE B | DWG. NO. 1133 | REV 0
MATERIAL CODE
MATERIAL: N/A
TITLE: Assembly, B/A Upper Ladder
ROUTER FILE:
SCALE: 1:24 | WEIGHT: N/A | SHEET 1 OF 1

Fig. D.14. Preliminary sub-assembly drawing for the upper ladder section (P-1133) to FGFT standards

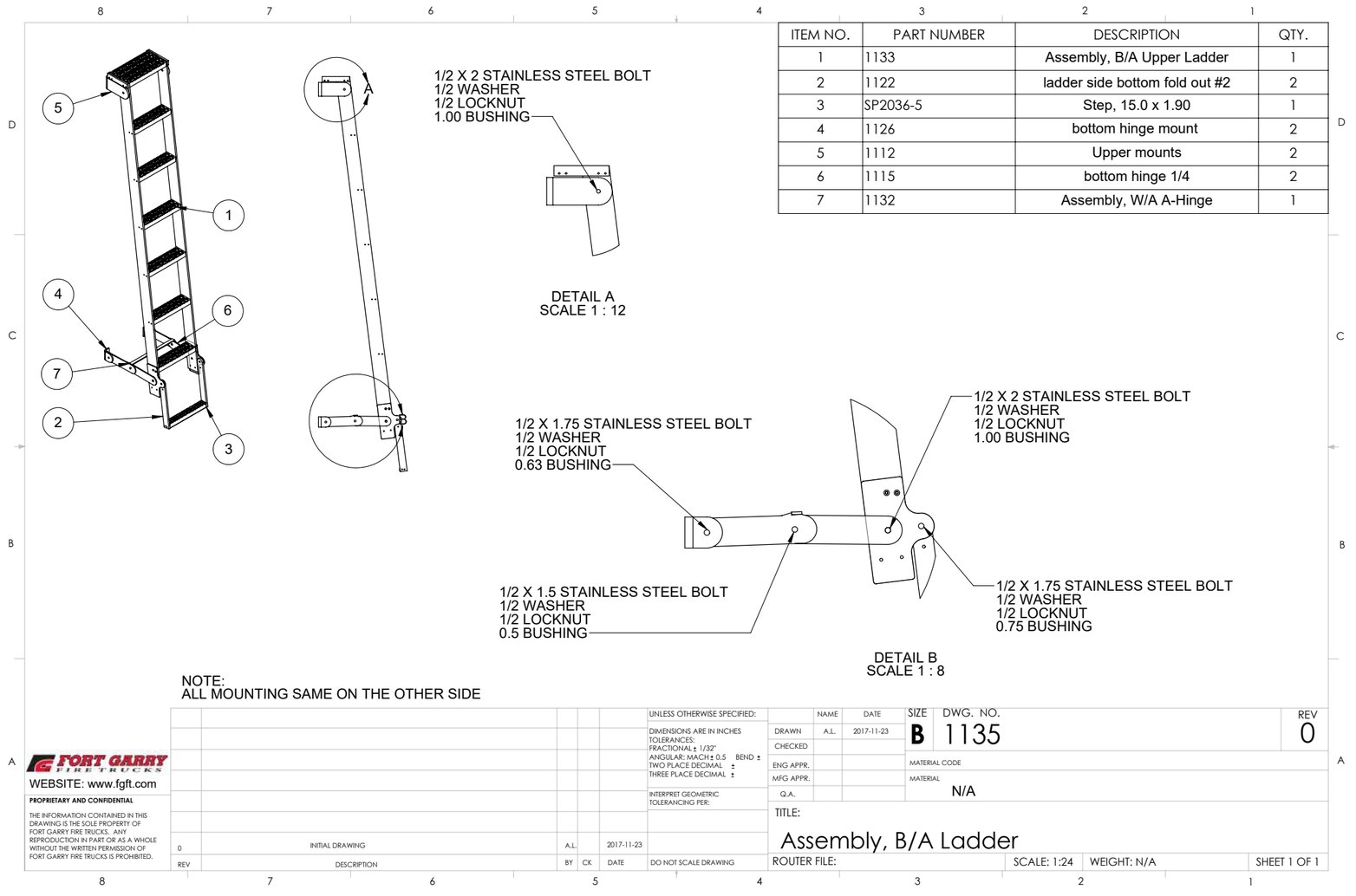

ITEM NO.	PART NUMBER	DESCRIPTION	QTY.
1	1133	Assembly, B/A Upper Ladder	1
2	1122	ladder side bottom fold out #2	2
3	SP2036-5	Step, 15.0 x 1.90	1
4	1126	bottom hinge mount	2
5	1112	Upper mounts	2
6	1115	bottom hinge 1/4	2
7	1132	Assembly, W/A A-Hinge	1

Fig. D.15. Preliminary assembly drawing of the rear access ladder (P-1135) to FGFT standards