FINAL DESIGN REPORT

StepFree Stair Climber Design



Submitted by: Team 9
Missy Barteaux, Patricia Derksen, Joshua Ilyas, Lily Sanderson, Wardah Wahid

Client Organization:
Tetra Society: Winnipeg Chapter

Advisors:
Natasha Jacobson, Don Petkau, James White, Aidan Topping

Department of Biosystems Engineering
University of Manitoba
Winnipeg, Manitoba, Canada

Date: March 21st, 2025

Executive Summary

The goal of this project was to develop a wheelchair stair climber to help manual wheelchair users navigate their environments safely and with greater ease. This device addresses the challenge that stairs pose to our client and other wheelchair users, who have difficulty accessing a variety of spaces due to the lack of accessible infrastructure. The StepFree stair climber, operated with assistance, improves accessibility for our client.

During the design process the key requirements considered were smooth and stable operation, compatibility with different staircases and different wheelchairs, and affordability for the client. Additional criteria, such as cost, manufacturability, portability, force reduction ability, user comfort and safety were also evaluated. A tracked wheel design, inspired by high traction mechanisms like those in tanks excavators, best met these requirements.

The StepFree stair climber consists of a dolly-like frame, in which, the user in their wheelchair is secured facing away from the stairs. The frame features tracked wheels which are fixed at an angle such that they can rest on the stairs and transport the device up or down. To achieve controlled and smooth movement up and down the stairs, a button-controlled motorized system, powered by a lithium-ion battery, was used. This system allows the user to be safely transported with minimal force required by the operator.

The StepFree stair climber successfully passed the weight capacity test, carrying over 90 kg of weight without any detectable deflection. Additionally, the device met all collapsible size requirements and had an average device set up time of 4 minutes and 30 seconds, well within the desired time frame and the electrical housing proved to be water-resistant. The device was able to be adjusted to accommodate most wheelchairs tested in a width range of 40-70 cm. Unfortunately, the team was unable to test for the operator force input requirement, number of stairs accommodated and battery life under load, due to the tracks not rotating in the completed assembly. As a result, these tests were considered failed and reported in the verification procedure.

The total project cost was $1,844, reflecting the expenses of a first-generation prototype. However, with industrial-scale manufacturing and custom-made parts, the final product price can be significantly reduced. In future iterations or modifications of this device, it is recommended that a lighter-weight track system and a more powerful motor be selected to better suit the application. A lighter material is recommended for the frame to increase ease of transport, and modifications to the frame and wheel bracket dimensions would increase the range of wheelchairs compatible with the device. By addressing this specific accessibility challenge, the StepFree stair climber has the potential to improve the lives of other manual wheelchair users facing challenges in similar environments.

Table of Contents

Executive Summary ii

Table of Contents iii

List of Figures vi

List of Tables vii

1. Introduction 1

1.1 Project Context 1

1.2 Background 1

1.2.1 Client Details 2

1.2.2 Activity and Physical Environment 2

1.2.3 Existing Technology 3

2. Problem Definition 6

2.1 Problem Statement 6

2.2 Target Specifications 6

2.3 Constraints 7

3. Design Solution 9

3.1 Final Design Overview 9

3.2 Frame Assembly 10

3.3 Tracked Wheels Assembly 16

3.4 Powertrain Assembly 18

3.5 Braking 21

3.6 Operation of the Device 23

3.7 Storage and Handling 24

3.8 Prototype Cost 25

4. Verification Procedure 26

5. Sustainability 36

6. Project Limitations 37

6.1 Design Solution Limitations 37

6.1.1 Track Rotation Failure 37
6.1.2 Excessive Weight 38
6.1.3 User Safety and Stability Concerns 38
6.1.4 Limited Budget 39
6.2 Verification Tests Limitations 40
6.2.1 Test Results for Track Rotation 40
6.2.2 Weight Capacity and Durability Testing 41
6.2.3 Battery Efficiency Testing 41
6.2.4 Limitations in Verifying Compatibility with Steep Pitches 41
6.2.5 Limitations in Verifying Adaptability to Chair Changes 42
6.2.6 Safety and Stability Verification 42
7. Recommendations 43
7.1 Design Improvements 43
7.1.1 Modify the Track System 43
7.1.2 Increase Motor Power Output 43
7.1.3 Reduce Overall Device Weight 43
7.1.4 Improve Wheelchair Compatibility 43
7.1.5 Improve Track Alignment and Assembly 44
7.1.6 Enhance Portability Features 44
7.2 Electrical Enhancements 44
7.2.1 Improve Waterproofing and Weather Resistance 44
7.2.2 Optimize Battery Life and Power Efficiency 44
7.3 Process and Testing Refinements 44
7.3.1 Adjust Project Timeline for Part Sourcing and Testing 44

7.3.2 Develop a Track Assembly Safety Tool 45
7.3.3 Develop Procedure for Track Friction and Resistance Testing 45
8. Conclusion 47
9. Reference List 49
Appendix A: Design Data A-1
A.1 Weighted Decision Matrix A-1
A.2 Bill of Materials A-2
A.3 Sustainability GPM Tables A-1
Appendix B: Part Drawings B-1
B.1 Frame Drawings B-1
B.2 Wheel Bracket Drawings B-2
B.3 Track Profile Drawings B-4
B.4 Sprocket Drawings B-5
B.5 Track Side Guard Drawings B-6
B.6 Motor-Gearbox Mounting Plate B-7
B.7 Motor Mounting Bracket B-8
B.8 Track Bearing Housing B-9
B.9 Electrical Circuit Drawing B-10
Appendix C: Other product specifications C-1
C.1 Client wheelchair specifications C-1
Appendix D: Calculations D-1
D.1 Power Requirements D-1
D.2 Battery Life D-1
D.3 Chain selection D-2
D.4 Deflection Calculations D-2
Appendix E: Standard Operating Procedures E-1

List of Figures

Figure 1: Motion Composites Apex C Wheelchair 2

Figure 2: Step Rise and Run 3

Figure 3: Durhand Climbing Stairs Trolley 4

Figure 4: Battery Operated Climbing Trolley 5

Figure 5: StepFree Component Diagram 10

Figure 6: Frame Dimensions in Compact Configuration (Left) and Extended Configuration (Right) 11

Figure 7: Spring Button Aid 12

Figure 8: Folding Track Attachment in Upright (Left) and Extended (Right) Positions 13

Figure 9: Adjustable Wheel Bracket 14

Figure 10: Drive Shaft Assembly 14

Figure 11: Back View of Headrest with Adjustable Velcro Attachment 15

Figure 12: Adjustable Securing Strap 15

Figure 13: Diagram of Tracked Wheel System (Tracks not Pictured) 16

Figure 14: Track Securing Strap 18

Figure 15: Motor and Gearbox Mounted on Frame 19

Figure 16: StepFree Handlebar with Push Buttons and Brakes 20

Figure 17: Electrical Box with DPDT Switch, Battery Connector and Battery 21

Figure 18: Diagram of Brake System Components 22

Figure 19: Drum Brakes 22

Figure 20: StepFree Stair climber Interfacing with Staircase 23

Figure 21: Model of StepFree in Compact (Left) and Extended (Right) Position 24

List of Tables

Table 1: Target Specifications 7

Table 2: Constraints 7

Table 3: Summary of testing results 26

Table 4: Results of Verification Procedure P1.1 27

Table 5: Results of Verification Procedure P2.1 28

Table 6: Results of Verification Procedure P3.1 29

Table 7: Results of Verification Procedure P5.1 31

Table 8: Results of Verification Procedure P6.1 32

Table 9: Results of Verification Procedure P7.1 33

Table 10: Results for Verification Procedure P10.1 34

Table 11: Results of Verification Procedure 9.1 35

Table 12: Sustainability Evaluation Results 36

1. Introduction

Tetra Society is a non-profit organization that develops affordable solutions for individuals with physical disabilities by connecting them with volunteers who can design and build innovative assistive technology unique to the clients' needs. Our team worked with the Winnipeg chapter of Tetra Society to develop a stair climbing device for a wheelchair user who requires assistance in ascending and descending a few steps.

1.1 Project Context

Our client is quadriplegic and relies on a manual wheelchair for daily mobility. One of the significant challenges she faces is navigating stairs which present a barrier for her to access different levels of public spaces. This limitation affects her independence and ability to participate in activities, such as visiting friends and family members or attending events. Currently, our client relies on her family members to lift her and her wheelchair up and down the stairs in these situations, which can be physically demanding and restricts the client's ability to engage in outings. When discussing perceived autonomy with individuals who use wheeled mobility assistive devices, stairs, curbs, and other obstacles pose the biggest challenges within built environments [1]. Without proper assistance, it is both physically taxing and potentially dangerous for her family to lift and carry her wheelchair up and down the stairs. This highlights the urgent need for a reliable, safe solution that ensures the client's mobility is not limited by such obstacles.

The design goal is to develop a stair climber that will assist the client in safely navigating up and down stairs. While addressing environmental accessibility challenges is crucial, assistive technology can bridge the gap when modifying the built environment is not possible [2]. By providing a custom solution tailored to the client's needs, we aim to enhance her autonomy and reduce the strain on her family, ensuring smoother transitions between floors and an overall better quality of life.

1.2 Background

The background information for this project will be contextualized using the HAAT model, a theoretical framework used in assistive technology (AT) design [3]. First, describing the human who will be using the technology, followed by the activity the client is wanting to accomplish and the ATs that enable the activity to be completed. All of this is viewed within the physical, social, cultural, and institutional context in which the AT will be used, with a particular focus on the physical environmental and how it affects the outcomes of this project.

1.2.1 Client Details

Our client has quadriplegia, which is described by Cleveland Clinic [4] as, "a symptom of paralysis that affects all a person's limbs and body from the neck down." More specifically, our client has incomplete quadriplegia. This indicates that she still has some movement and sensation below the neck, particularly her arms, but lacks fine motor skills and has difficulty with certain movements or maintaining certain positions if tilted. Our client currently uses an Apex C wheelchair (Figure 1). This ultralight wheelchair weighs only 17.2 pounds (7.8 kg) [5]. As such, even a small weight addition can have significant impacts on the balance and maneuverability of the device.



Figure 1: Motion Composites Apex C Wheelchair [5]

1.2.2 Activity and Physical Environment

The goal of the client is to perform the activity of ascending/descending stairs in public spaces with the aid of the device and one other person. The device is intended to be adaptable for a variety of straight stairs, without any change in direction. It will principally be used in indoor carpeted environments. However, it should also be compatible with concrete, metal, and wood stairs to ensure it can be used in a variety of environments. The device should be safe to use in various weather conditions including light rain and snow. It is understood that extreme snow weather conditions pose additional challenges and safety risks to wheelchair users. However, this form of heavy-duty use will not be a primary goal for the project due to limiting factors such as cost, and weight of the device as described in Section 2.3.



Figure 2: Step Rise and Run[6]

According to the National Building Codes of Canada [7], stairs must have a uniform rise between 125 mm and 200 mm and a uniform run between 255 mm and 355 mm. These dimensions are illustrated in Figure 2. Based on these dimensions it was determined that stair pitches can range from 19.40 degrees to 38.11 degrees. A landing is required at the top and bottom of any flight of stairs and a handrail must be provided for exterior stairs with more than three risers.

1.2.3 Existing Technology

During the initial problem definition phase of the project, several potential mechanisms were considered for the solution. The two most promising mechanisms included the tracked wheel and cluster wheel designs. Fortunately, existing products for the two designs were available on the market, which allowed for preliminary testing and evaluation. Figure 3 shows the Durhand climbing stairs trolley, a commercially available solution for the cluster wheel design purchased from Home Depot at a price of $141.

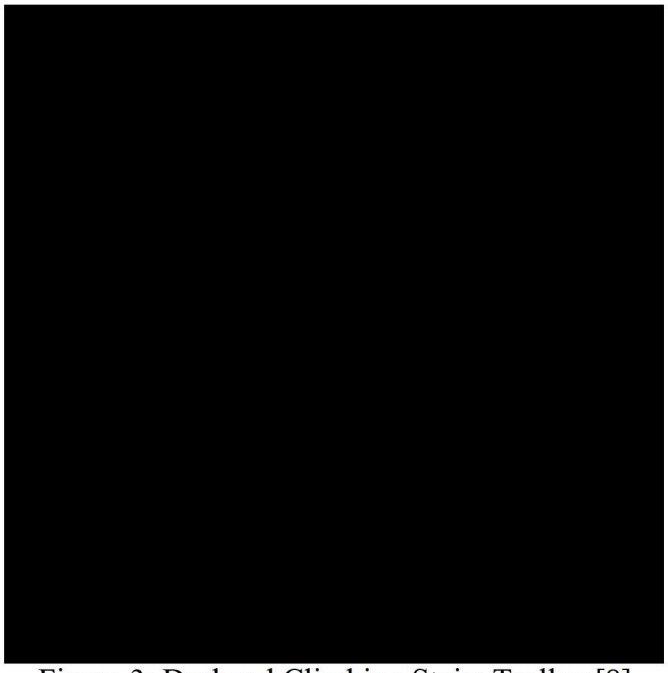

Figure 3: Durhand Climbing Stairs Trolley [8]

Preliminary testing revealed that this design was not appropriate for the client. The trolley displayed instability and uneven performance during ascending and descending movements. Additionally, the trolley was not compatible with a variety of staircases, which was a significant factor for the project.

A commercially available tracked wheel device is manufactured by MS3C (Figure 4). The existing device is beyond the allocated budget and not feasible for the client. It also requires the user to transfer out of their wheelchair, which is a physically demanding and time-consuming task. However, the tracked wheel mechanism shows promise as a safe and user-friendly method of ascending or descending a staircase.

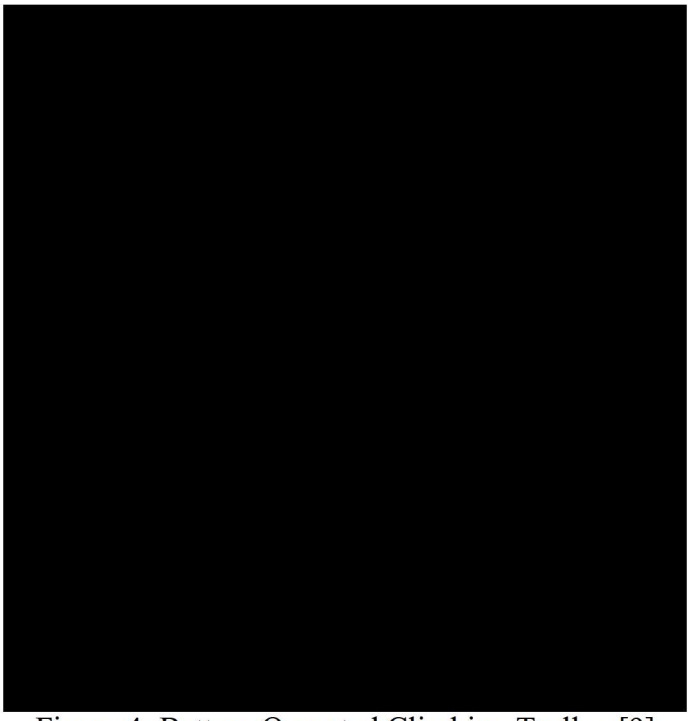

Figure 4: Battery Operated Climbing Trolley [9]

The key requirements for the solution included smooth and stable operation, compatibility with different staircases, and affordability for the client. A weighted decision matrix was used to consider all potential design concepts (Appendix A.1) and a powered track wheel mechanism was determined to be the best solution.

2. Problem Definition

In order to have a solid foundation for the design process, it is critical to have a comprehensive understanding of the problem at hand. This is achieved by developing a problem statement, outlining the target specifications to define metrics that the design should achieve, and identifying constraints which the design must meet to be considered a success.

2.1 Problem Statement

Wheelchair users are not always guaranteed access in public spaces where stairs often create an obstacle. The client, who is a quadriplegic, manual wheelchair user, needs a solution to aid her in ascending and descending stairs in public spaces that do not have accessible pathways without leaving her wheelchair or having others lift the full weight of her and her wheelchair.

2.2 Target Specifications

The target specifications provide a guiding framework for the design process. The collapsed weight and size of the device (S1.1-4) are defined such that the device is small enough to be transported in the back of a vehicle and lifted in and out of the vehicle by a caregiver. Once the device is removed from the car, it must be deployed within a reasonable timeframe, ideally less than 5 minutes.

Specifications S3.1 and S4.1 refer to the key functions of the design. S3.1 is the combined weight of the client and the wheelchair that must be supported by the design, this weight includes a safety factor of 1.5. S4.1 is the lifting or pulling force required from the client's companion to bring the wheelchair up a set of stairs with the assistance of the device.

The design should be able to function on a variety of staircases, the design should not be adaptable to a range of common stair pitches, furthermore it must be able to ascend multiple steps as outlined in S5.1 and S6.1 respectively.

The design should be able to be used by the client if she were to change her wheelchair model or the measurements of the wheelchair change. The device should be adjustable for, or compatible with, a range of wheelchair widths, heights, and wheel diameters to ensure long-term useability.

Finally, should the device have power requirements, the battery life should be long enough for the device to function for a few trips up and down the set of stairs to ensure the client is not left stranded without the use of the device. Additionally, electrical components must be protected from the elements, as the device may be used in outdoor environments.

Table 1: Target Specifications

Spec.	Description	Criteria	Verification Procedure (Section 5)
S1.1	Weight of device	Max. 23 kg [10]	P1.1
S1.2	Collapsed length	Max 1.09 m	P1.2
S1.3	Collapsed height	Max 1.05 m	P1.2
S1.4	Collapsed width	Max 0.90 m	P1.2
S1.5	Track Length	Min. 0.8 m	P1.5
S2.1	Set up time	Max. 5 min	P2.1
S3.1	Weight capacity	Min. 90 kg	P3.1
S4.1	Operator force input required	Max. 225.6 N	P4.1
S5.1	Compatible with various stair pitches	20-40°	P5.1
S6.1	Number of stairs accommodated	Min. 3 stairs	P6.1
S7.1	Adaptable to chair changes	40-70 cm width	P7.1
S8.1	Battery life	Min. 2 flights	P8.1
S9.1	Water resistant electronic housings	No water penetration	P9.1
S10.1	Laterally stable	Max. 5° tilt angle	P10.1

2.3 Constraints

The following table contains a list of identified constraints and their implications on the development of the project solution. These constraints include physical, financial, and regulatory factors.

Table 2: Constraints

Constraints	Description	Implications
C1	Project timeline is constricted to 7 months.	Project progress will be tracked regularly using Gantt charts, meeting minutes and a work breakdown structure.
C2	Allocated collective budget of $1400 for project.	Restricts the types of materials and technology that can be used.
C3	The wheelchair must remain stable with a maximum tilt angle of 5 degrees on level ground.	The weight distribution of the wheelchair when the solution device is applied must be considered in the design and test process.
C4	The cargo space of the client's car is 2.10 cubic meters [11]with dimensions of 1.09x1.05x0.90m (length x height x width)	The solution must not exceed these dimensions and will need to be reflected in the design and building processes.
C5	The weight of the solution device must not exceed 23 kg.	The design and materials will need to reflect this constraint.

C6	The design solution must be durable (withstand daily use).	The highest impact parts of the design must not indicate fatigue failure during testing.
C7	Any electrical components must be protected from weather elements.	The design and materials will need to reflect this constraint.
C8	Client's weight and travel needs: The client's weight and any necessary items for travel (e.g., personal items, medical equipment) must be accounted for in the design.	The design must ensure that the wheelchair and solution device can support both the client's weight and the items she needs to carry without compromising stability, safety, or comfort.

3. Design Solution

In this section, the proposed design solution for the stair climber stair climber is presented. The design solution aims to provide a practical and efficient means of assisting a wheelchair in navigating stairs. After considering multiple design alternatives, the tracked wheel design was selected for its ability to meet the project's requirements for safety, comfort, and performance. The following section outlines the final design, its technical features, and how it addresses key challenges in stair navigation.

3.1 Final Design Overview

The tracked wheel design was selected through a comprehensive weighted design matrix (Appendix A.1) that considered the criterion of cost and manufacturability, portability, force reduction ability, user comfort and safety. The tracked wheel design is inspired by the high-traction mechanisms found in tanks and excavators, adapted for a smaller-scale use in stair navigation. Technically, the design consists of angled tracks mounted on a durable frame, which optimize the contact surface with the edges of the stairs. This angular configuration allows the wheelchair to maintain stability and traction as it ascends or descends. A motorized drive system, coupled with a torque transmission mechanism, rotates the tracks to provide a controlled and continuous smooth motion. The system converts electrical energy into mechanical force, ensuring a seamless operation that minimizes extra effort from the caregiver. Load distribution across the tracks reduces localized pressure on individual steps, which ultimately enhances safety and durability. Figure 5 below shows a diagram of the major design components.

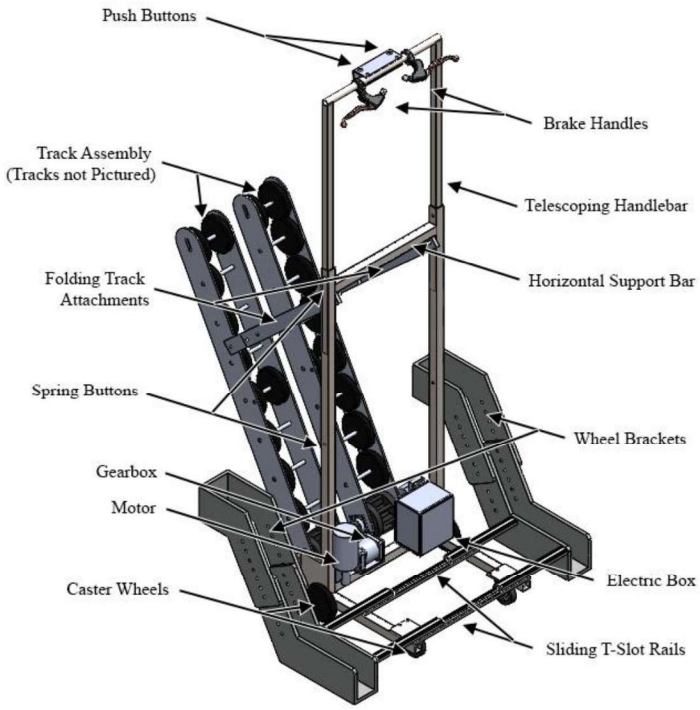

Figure 5: StepFree Component Diagram

3.2 Frame Assembly

The frame serves as the foundation of the stair climber, integrating structural strength, adaptability, and portability to ensure safe and efficient operation. Constructed from high-strength A36 steel, the frame is designed to support the tracked wheel system, motorized powertrain, and user interface while maintaining a lightweight and manageable form. Its structure consists of a base frame for weight distribution, vertical supports for height adjustment, and horizontal reinforcements for overall added stability. It is engineered to accommodate the client's current wheelchair while allowing flexibility for future wheelchair changes through adjustable wheel brackets, ensuring a secure fit during operation. Figure 6 illustrates the overall dimensions and structural layout of the frame itself, showcasing the model's design and adaptability for both operational use and compact storage.

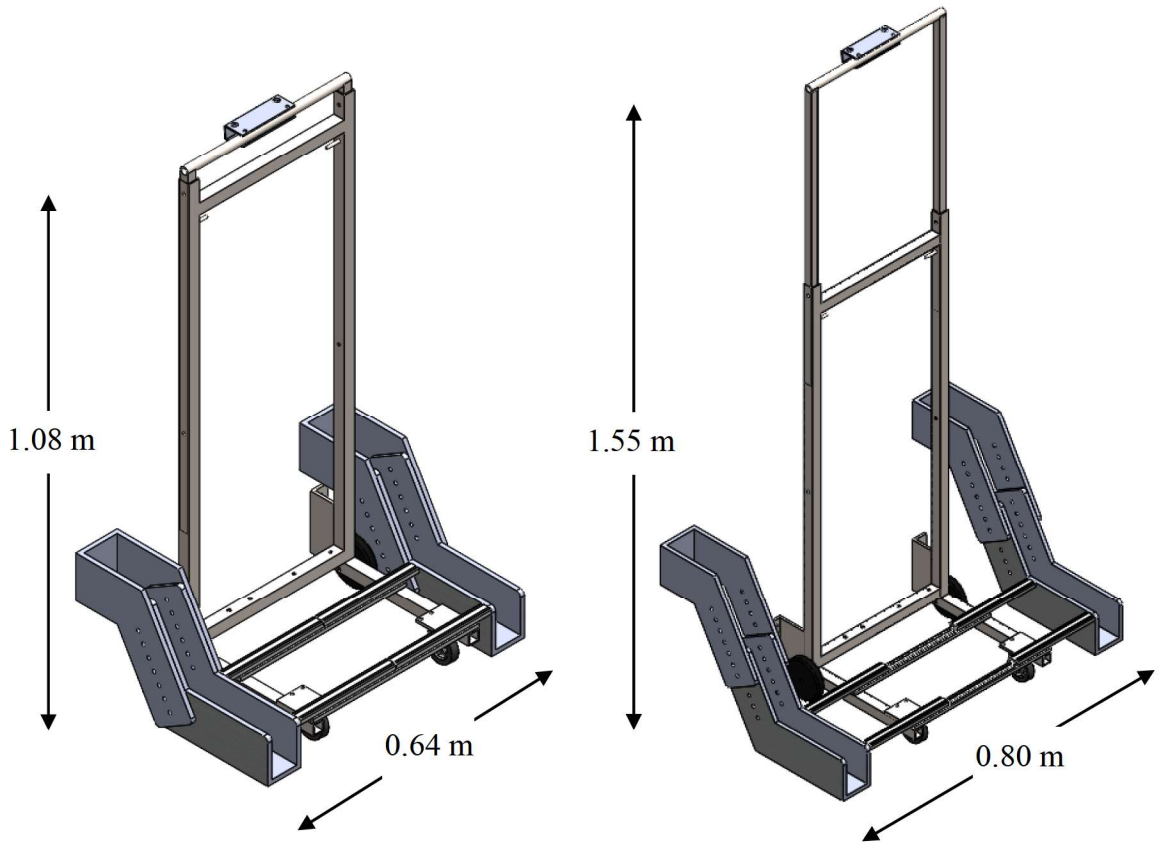

Figure 6: Frame Dimensions in Compact Configuration (Left) and Extended Configuration (Right)

To enhance portability and storage, the frame incorporates folding and telescoping mechanisms. The folding track attachment allows the tracks to pivot inward, reducing overall storage space, while the telescoping handles improve maneuverability. These features keep the device compact and within weight constraints for easy transport. The frame also plays a critical role in stabilizing the angled tracks, which maximize stair contact for continuous traction and controlled movement. By integrating structural strength with adjustable and collapsible features, the frame balances functionality, safety, and ease of use during operation.

The main frame, constructed from high-strength A36 steel, serves as the backbone of the system, integrating multiple structural components to ensure stability and durability. The base supports the weight of the device itself while accommodating the weight of both the client and the wheelchair. Extending upward, the vertical frame attachments provide critical support for upper components, such as the handle and headrest, through two extendable square steel pieces, as shown in Figure 6 above. This feature was identified as a possible weak point in the device and as such deflection analysis was performed to confirm that the material choice was suitable (Appendix D.4). The handlebar also features a button plate, which allows the push buttons that operate the device to be

positioned ergonomically with respect to the operator's hand placement. To ensure maximum structural integrity, the frame components were joined using MIG (metal inert gas) welding, which provides strong, consistent welds that can withstand any stresses. The horizontal frame supports, welded to the vertical components, further reinforces the structure, enhancing rigidity during stair navigation. Additionally, a rounded steel bar at the top functions as a handle, which was securely welded in place to ensure ease of maneuverability while maintaining the overall strength of the frame. Drawings of the frame can be found in Appendix B.1.

To facilitate collapsibility and user-friendly operation, spring buttons are integrated into the frame's extension sections. These small, spring-loaded locking mechanisms will allow users to lock parts of the frame into position securely and release them for collapsing or extending. To further assist in pushing the spring buttons, custom 3D-printed clips were designed and integrated into the system, as shown in Figure 7. These clips snap in place around the frame, compressing the spring button. This tool provides a simple yet effective solution, allowing users to compress the spring buttons more easily, reducing strain and making adjustments more accessible.

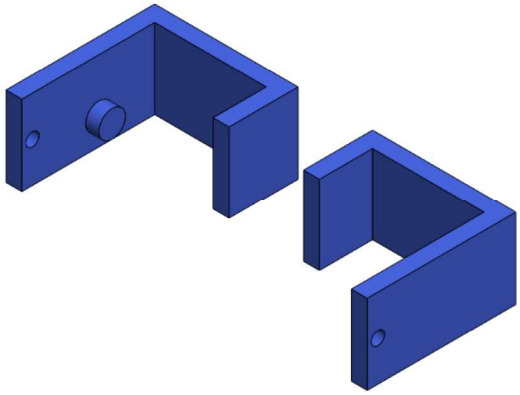

Figure 7: Spring Button Aid

The folding track attachment, as shown in Figure 8, secures the track system to the main frame while allowing it to pivot for folding. It is mounted to the frame using T-slot sliding rails, which allow for smooth and precise adjustments. Each folding track attachment consists of two members and three pinned connections, allowing the track to freely rotate. A fourth pin with a quick release feature can be inserted into the two members creating a rigid system that locks the track into the operating position. This convenient and secure fastening solution allows for an easy switchover between operational and storage modes. The pins feature a locking mechanism to prevent accidental disconnection and are made from corrosion-resistant materials, ensuring durability in various environmental conditions.

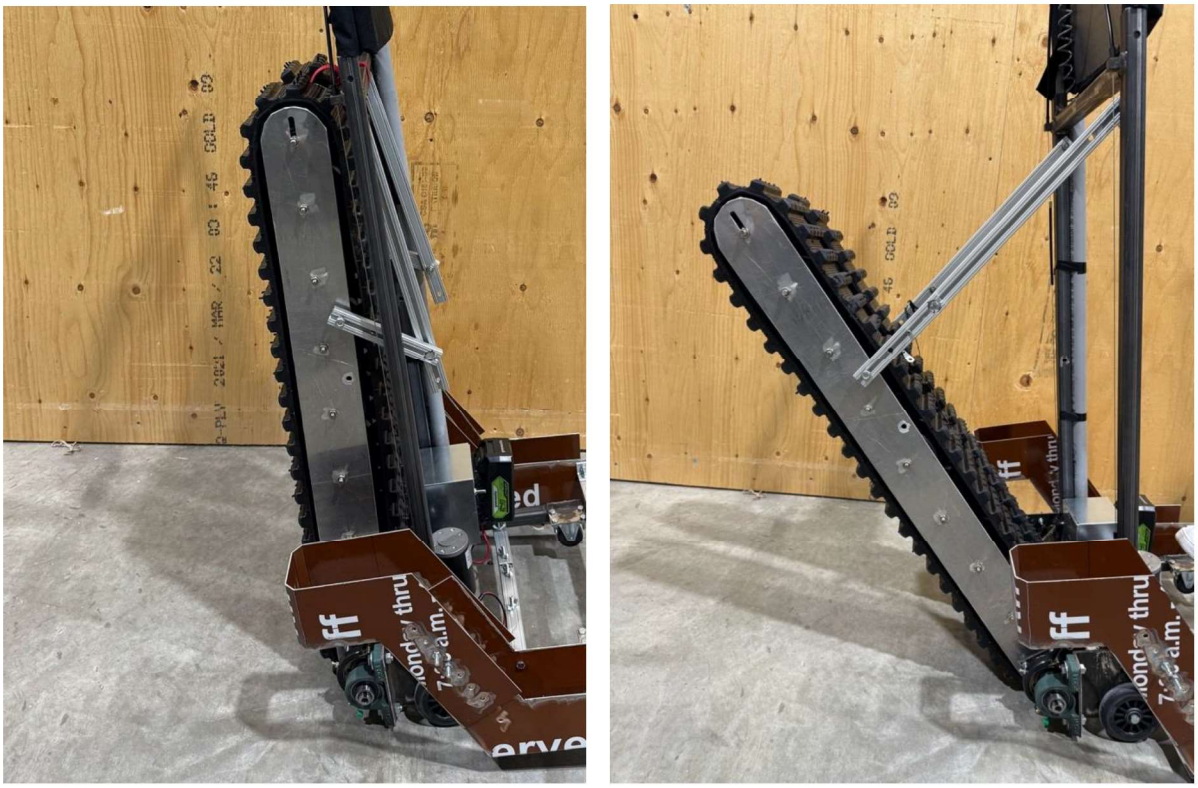

Figure 8: Folding Track Attachment in Upright (Left) and Extended (Right) Positions

To accommodate a range of wheelchair sizes, adjustable wheel brackets (see Appendix B.2 for part drawings), made from repurposed aluminum donated to the team, provide a secure cradle for the wheelchair's wheels, as seen in Figure 9. Their angular design enhances structural support and prevents unwanted movement during operation. Incremental bolt holes along the side of the wheel bracket allows them to be adjusted to securely fit a range of wheel diameters including the client's wheelchair, which has a 24-inch wheel diameter (see Appendix C.1 for wheelchair specifications). Furthermore, the wheel brackets are secured to the frame with sliding t-slot rails and fastened with wingnuts. This allows the brackets to easily be adjusted to a range of wheel widths and compacted for storage, without the need for any tools.



Figure 9: Adjustable Wheel Bracket

For ease of transport, the device is equipped with caster wheels mounted at the front and back of the base of the frame. These wheels enable non-motorized transport over flat surfaces, such as pavement, carpet, or tile, when the device is not in use.



Figure 10: Drive Shaft Assembly

The drive shaft is mounted to pillow block bearings which are fastened to mounting brackets at the base of the back of the frame. As illustrated in Figure 10, the symmetrical drive shaft assembly connects the pillow block bearings, drum brakes, tracked wheel sprockets and a sprocket, placed from the outer shaft edge inwards.



Figure 11: Back View of Headrest with Adjustable Velcro Attachment

To enhance user comfort and safety, a padded headrest offers ergonomic support during operation, as shown in Figure 11. This headrest attaches to the vertical frame components with Velcro, allowing it to be adjusted to the height of the user and their wheelchair, and making it removeable for storage. The headrest is made of a weather resistant, wipeable material ensuring it is durable and cleanable.



Figure 12: Adjustable Securing Strap

Adjustable wheelchair securing straps will be utilized to ensure the wheelchair remains firmly attached to the device, preventing any movement, or slipping during stair navigation, as illustrated in Figure 12. These straps wrap around the wheelchair and the horizontal frame supports and secure easily with an adjustable buckle that ensures a secure connection with a variety of wheelchairs. These integrated safety features enhance overall stability and reliability, ensuring a secure experience for the user.

3.3 Tracked Wheels Assembly

A pair of tracked wheels serve as the interface between the design and the staircase on which it is operated. A model of these wheels can be seen in Figure 13. Similar to tracked wheels used on tanks and construction equipment, these wheels ensure smooth motion, without slipping on an uneven surface.

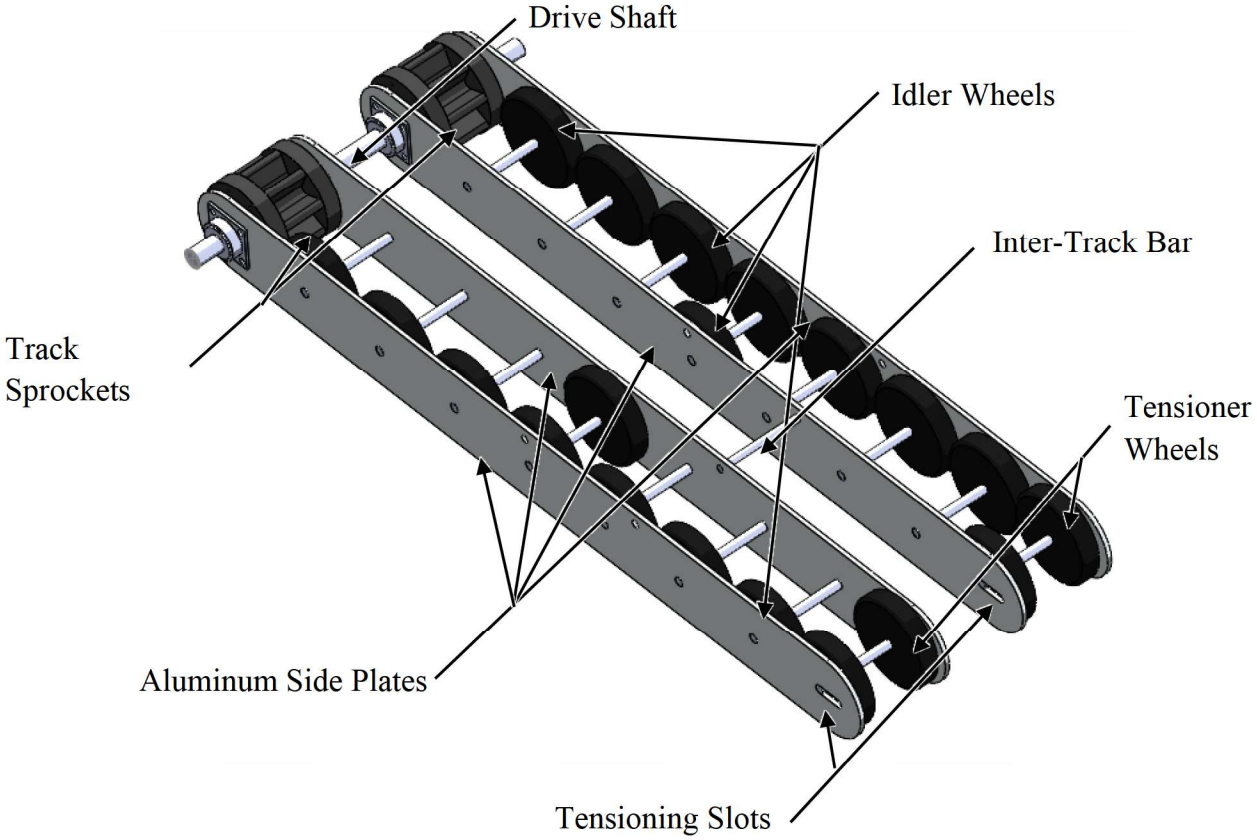

Figure 13: Diagram of Tracked Wheel System (Tracks not Pictured)

A non-slip contact with the stairs is ensured through rubber tracks which are designed to have a non-slip contact with the stairs and provide a sturdy base for the device while in operation. Power is transmitted to the tracks through the drive shaft**.** The drive shaft transmits power to the track sprockets which are fixed on either end of the shaft. The sprockets interface with the inner profile of the tracks and powers the rotation of the tracks.

A set of aluminum side guards run along either side of each track. These serve to mitigate the entanglement hazard presented by the moving components. Furthermore, the guards provide an attachment point that is key in maintaining the shape and position of the tracks. Small shafts run between the aluminum side guards with idler and tensioner wheels supporting the shape of the track as well as the weight of the device and user while allowing the tracks to rotate smoothly.

The track profile (VTR-051 100X40) is a key structural component designed to facilitate movement over stairs. Its inner profile is precisely shaped to interface with the sprocket, ensuring power transmission and controlled motion (see Appendix B.3 for drawings). The outer tread features a specialized design that enhances grip, particularly on stair edges, providing the necessary traction to prevent slippage and to ensure stability during operation. Furthermore, the tracks are made of a wear-resistant rubber which provides a high-friction contact surface. This profile was selected to withstand repeated use under load, balancing durability, and flexibility.

The track sprockets are responsible for driving the track's rotation. They are custom manufactured to match the specifications of the tracks (see Appendix B.4 for drawings). A keyed hub was secured to the side of each drive sprocket, creating a secure key, and set screw connection with the drive shaft.

Eight small shafts run between the side guards on each of the tracks as seen in Figure 13 above. To distribute the weight evenly along the track, idler wheels are placed on the seven inner shafts. These support wheels, which do not contain bearings, are strategically placed along the track's outer edge to ensure load distribution. The center shaft has an idler wheel on both sides to reinforce the shape of the tracks. By reducing localized stress points, they contribute to smoother movement and improved longevity of the track system. Their function is particularly important when navigating uneven surfaces, as they would help maintain balance and prevent excessive wear on specific track sections.

Tensioner wheels are placed on the eighth shaft at the leading end of the track (opposite the track sprocket). These wheels play a crucial role in maintaining the track's shape and tension. This outer shaft is secured in a slot, allowing the tensioner wheels to be pulled outwards if increased tension on the track is needed. This dynamic adjustment makes sure that the track stays correctly aligned with the sprockets and helps compensate for elongation over time. Without this tensioning mechanism, slack in the track may lead to disengagement from the sprockets, which could result in operational issues or inefficiencies.

The side guards serve a dual purpose: they function as protective barriers, preventing objects or debris from getting caught in the movement components, and they provide structural support by housing key attachment points, details of these features can be found in Appendix B.5. This includes an attachment pin to the folding track attachment which was described in Section 3.2. The side guards also secure track bearings which are attached by a custom manufactured bearing housing (Appendix B.8) In addition to this, the side guards contribute to the overall safety of the system by reducing the risk of accidental entanglement or damage to any of the critical moving parts.

To maintain proper alignment between the two tracks, an inter-track bar runs between them near the top, connecting to the inner side guards. This rigid connection will ensure that both the tracks remain parallel during operation, preventing misalignment. This bar also serves as an attachment point for the track securing strap, which wraps around the frame's horizontal support bar and fixes the tracks in the compact configuration, as illustrated in Figure 14. This strap, like the wheelchair securing straps, has an adjustable buckle allowing the strap to be easily secured or released.

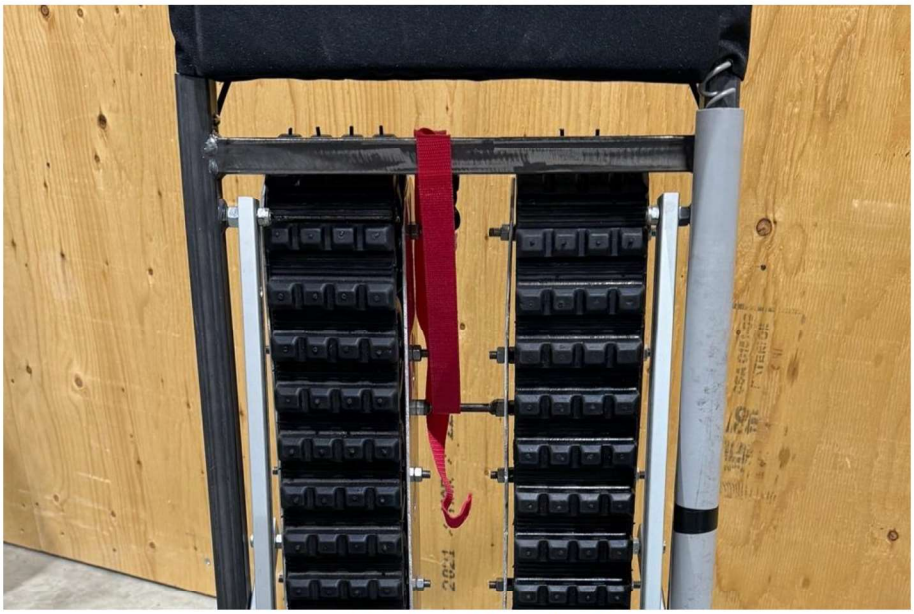

Figure 14: Track Securing Strap

3.4 Powertrain Assembly

The powertrain refers to the components involved in transferring electrical energy from the battery into mechanical motion to drive the system. The power system begins with a 24V battery providing power to a reversible, worm gear DC motor. The operation of this motor involves a control circuit using a solid-state relay so that the motor can only be activated when the user is holding the push buttons located on the handle. A 5:1 ratio gearbox is used to increase the torque supplied by the motor to satisfy the torque calculations that were completed. A sprocket and chain system then transfers this power to the drive shaft to turn the tracked wheels.

The system uses a planetary gearbox with a gear ratio of 5:1 to increase the torque produced by the motor. This gearbox features a NEMA23 flange as the connection point. In combination with the motor, the gearbox allows for a torque output of 40 N.m, exceeding the torque requirements outlined in Appendix D.1. The combination of the gearbox and motor effectively ensures that the system can handle the necessary load.



Figure 15: Motor and Gearbox Mounted on Frame

A worm gear motor is used to drive the tracked wheels in the system. The motor is rated for 24V, 80W, and 100 RPM, providing a torque value of 8 N.m. This torque is then enhanced to 40 N.m when paired with the gearbox. Worm gear motors are designed for high torque outputs at reduced speeds, making them ideal for applications requiring heavy load handling, such as in this system. Figure 15 depicts how the motor is secured to the gearbox with a custom aluminum mounting plate (see Appendix B.6) and to the frame with a custom steel mounting bracket (see Appendix B.7), ensuring all elements remain securely in place with the correct alignment.

The drive shaft, which is an integral component, will transfer the torque to the tracked wheels, ensuring efficient movement. A visual representation of the drive shaft can be seen in Figure 10.

The primary switch to activate the motor is a DPDT switch, as shown in Figure 1717, which must be flipped before the device can operate. The “up” position indication that the tracks will turn to move the device up the stairs, “down” for descending the stairs and straight out for the off position. Additionally, push-button switches are located along the frame handle. These switches are designed to be pressed and held during operation, completing the control circuit which then activates the motor, as seen in Figure 16.

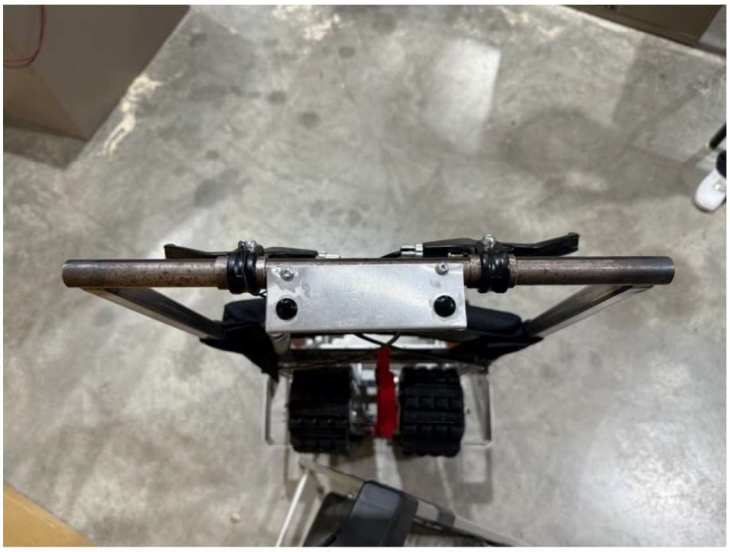

Figure 16: StepFree Handlebar with Push Buttons and Brakes

To control the motor, a solid-state relay is integrated into the system. This relay allows the motor to activate only when both push buttons are pressed simultaneously, as shown in the wiring diagram in Appendix B.9. The relay acts as a bridge, enabling the low-power signals from the push buttons (operating on a 9V battery) to activate the high-power 24V motor, ensuring safe and controlled operation. Additionally, this set up ensures that the higher voltage circuit can be housed at the bottom of the device's frame so that it stays away from high-touch areas on the device.

In terms of power, the system utilizes a 24V, 4.0Ah lithium-ion battery from GreenWorks. This battery is designed for power tools and as such is durable and safe to use in indoor and outdoor environments. It is well-suited to the motor's requirements and can discharge at a rate that allows it to run with our device for over our specified minimum distance of two flights of stairs. Given that the device will only be used intermittently for short periods of time to ascend or descend a few steps, the battery's runtime is sufficient (see Appendix D.2.) The lithium-ion battery technology provides several benefits, including a lightweight, cordless design, portability, rechargeability, and an integrated battery life status bar that enables the user to monitor the remaining charge.

A battery connector is located on the outside of the electrical box, the battery securely clips into this connector connecting it to the circuit to the circuit. This component can be seen Figure 17, and facilitates easy push button release of the battery for recharging purposes.



Figure 17: Electrical Box with DPDT Switch, Battery Connector and Battery

To transfer torque to the drive shaft of the tracks, keyed sprockets (20T) with set screws are used in combination with a #25 chain. This chain is rated to withstand 784 lbs (3490 N) of tensile force, which can be determined to be sufficient for the system's requirements, as specified in Appendix D.3.

3.5 Braking

Drum brakes have been selected for this design application due to their compact size and pressure-controlled braking. Two sets of brakes will be installed for greater control and to minimize wearing of the brake shoes. Handle brakes were also selected as they would give the operator companion a greater sense of intuitive control over the braking speed. The squeeze handles provide this response to the operator as the operator receive physical feedback as to how much braking force is applied. They also have the benefit of being applying more force when the device is rolling too quickly, as the device pulling downward would press the brake handles into the operator's hands more, thus applying the brakes more and slowing the device to a speed suitable for operation.

Cables and screws are installed to the length of the device at its maximum operating height, as shown in Figure 18. The flexibility of the cables allows for accommodation of a range of distances, spanning the fully extended and collapsed positions of the frame, and ensuring smooth functionality during use.

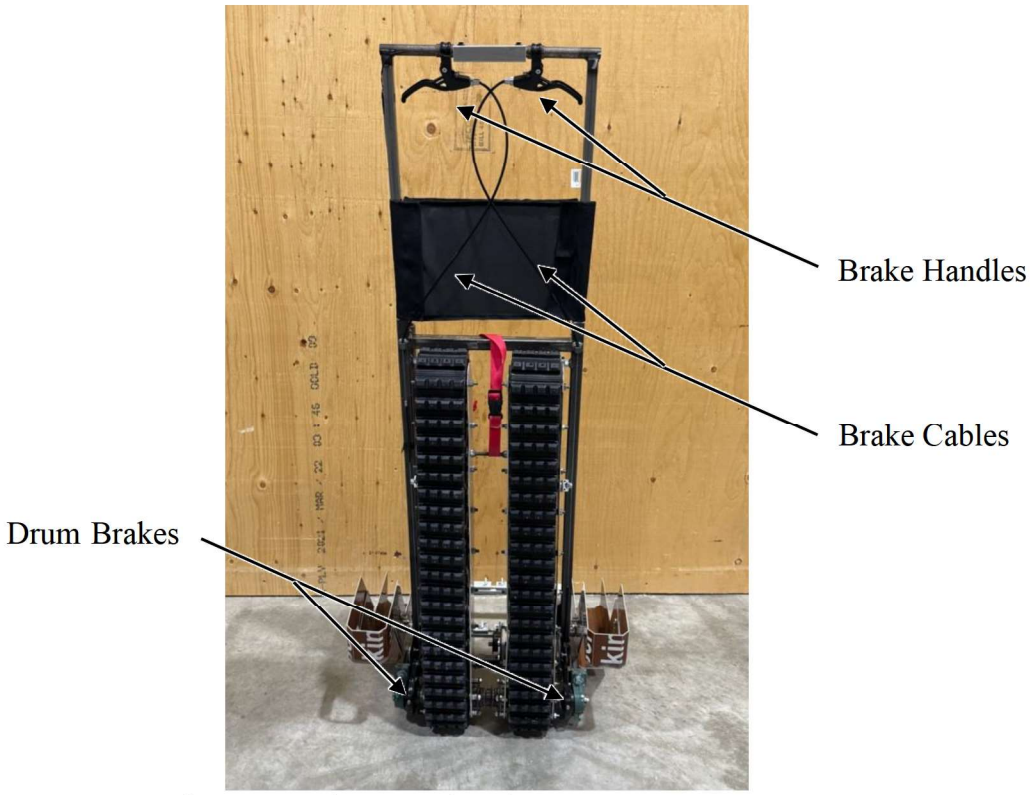

Figure 18: Diagram of Brake System Components

Drum brakes are integrated into the system to control the device's descent, as depicted in Figure 19. When the handle levers are engaged, tension is applied to the lever of the drum brake, causing the brake shoes to press against the brake drum. This action slows the device's descent, providing better control and enhances safety during operation.


Figure 19: Drum Brakes [12]

Handles are positioned approximately 5 cm distally from where the thumb power switch buttons are located on the handle as shown in Figure 16. This arrangement ensures that the device operator's thumbs can easily reach the push buttons during ascent while also allowing the user to wrap their hands around the handle for better grip during descent without accidentally pressing the switch buttons.

3.6 Operation of the Device

The proposed design allows the client to ascend and descend stairs with the assistance of one individual safely and efficiently. To use the device, it must first be adjusted to the dimensions of the user's wheelchair, the wheelchair can then be secured into the device using the adjustable straps. The telescoping handle and tracked wheels must both set to the extended position. The toggle switch on the electric box is used to select the desired direction of operation. The operator can then align the device with the staircase, at either the top or the bottom, and presses down both push buttons to activate the track. The tracked wheels are controlled by the powertrain which assists in lifting the weight of the client and wheelchair, significantly reducing the physical force required and ensuring controlled movement whether ascending or descending a staircase. Figure 20 shows the track being unfolded to engage with the stairs. Detailed operation instructions can be found in the standard operating procedure in Appendix E.

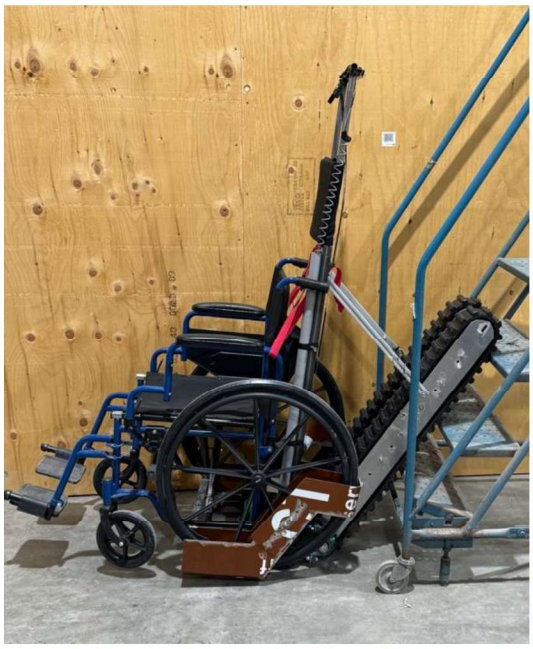

Figure 20: StepFree Stair climber Interfacing with Staircase

User orientation during the operation is the same for ascending and descending a flight of stairs. The client is to face up and have their backs to the stairs, and the device operator faces the same direction. This orientation provides better visibility and avoids the risk of tipping backwards during

the climb. On the descent down a flight of stairs the operator can apply the brakes as necessary, maintaining a slow and steady speed to ensure safety

3.7 Storage and Handling

For ease of storage and to ensure that the device can be safely lifted from the client's vehicle to the ground and vice versa, the device has been designed with collapsible, folding components. The tracks of the device may be folded inward, and the telescoping features collapsed with a folded height of 1.08 m, a width of 0.63 m, and depth of 0.60 m. This falls within the cargo space dimensions of a vehicle commonly used by our client, a Nissan Rogue [11], to ensure ease of transporting the device. The width of the device can be further reduced for storage by detaching the adjustable wheel brackets as necessary.



Figure 21: Model of StepFree in Compact (Left) and Extended (Right) Position

While the device may be rolled from one location to another on caster wheels to reduce the load of carrying the device for the client and her companion(s), the device itself should remain under 23 kg in order to be lifted in and out of a vehicle. As illustrated in Figure 21, the device can be compacted by collapsing the telescoping handle and adjustable wheel bracket, as well as locking the tracks in an upright position, detailed instructions can be found in Appendix E. This allows the device to reach the reduced width and height as previously described to fit the client's vehicle cargo space.

3.8 Prototype Cost

The cost of this prototype is $1844.88, a full breakdown of material costs can be found in Appendix A.2. If this device were to be reproduced it is expected that costs would be lowered as there would be less expenses incurred due to the iterative nature of the design process, such as parts not meeting required specifications or the requirement of design changes.

4. Verification Procedure

The specifications and device functions were tested using the testing procedures outlined in the following section. Table 3 below summarizes the specifications that the verification procedures tested for and indicates the results of testing by indicated pass (cell tinted green) or fail (cell tinted red).

Table 3: Summary of testing results

Spec.	Description	Criteria	Verification Procedure	Result
S1.1	Weight of device	Max. 23 kg [10]	P1.1	40.2 kg
S1.2	Collapsed height	Max 1.09 m	P1.2	1.08 m
S1.3	Collapsed depth	Max 1.05 m	P1.2	0.60 m
S1.4	Collapsed width	Max 0.90 m	P1.2	0.64 m
S1.5	Track Length	Min. 0.8 m	P1.5	0.98 m
S2.1	Set up time	Max. 5 min	P2.1	4 mins 30 s
S3.1	Weight capacity	Min. 90 kg	P3.1	Over 90 kg
S4.1	Operator force input required	Max. 225.6 N	P4.1	Over 225.6 N
S5.1	Compatible with various stair pitches	20-40°	P5.1	Stationary compatibility verified
S6.1	Number of stairs accommodated and Battery life	Min. 3 stairs	P6.1	Did not lift 3 stairs
S7.1	Adaptable to chair changes	40-70 cm width	P7.1	Does not fit all wheelchairs within this range.
S8.1	Battery life	Min. 2 flights	P6.1	Did not lift a minimum of 2 flights
S9.1	Water resistant electronic housings	No water penetration	P8.1	No water penetration
S10.1	Laterally stable	Max. 5° tilt angle	P9.1	Stationary compatibility verified

The verification procedures outlined below are labelled by a procedure number (e.g., P1.1) to indicate which specification(s) they correspond with in Table 3.

P1.1: Weight of Device

This testing procedure is to verify that the device's total weight does not exceed the 23 kg limit.

Equipment:

- Digital floor scale accurate to 0.1 kg (Toledo, model # 8140)

Procedure:

1. Place the device on a scale, ensuring it is centered and stable.
2. Record the displayed weight in kilograms.
3. Repeat the measurement three times to ensure accuracy.
4. Tabulate (see Table 4) the data and compare the average measured weight with the target of 23 kg.

Table 4: Results of Verification Procedure P1.1

Trial	Result
1	40.2 kg
2	40.2 kg
3	40.2 kg
Average	40.2 kg

As outlined, the device did not meet the target of 23 kg.

P1.2: Collapsed Dimensions (S1.2-S1.4)

This testing procedure is to confirm that the collapsed device meets the specified dimensional constraints, ensuring it remains compact for storage and transport.

Equipment:

- Measuring tape

Procedure:

1. Fully collapse the device.
2. Use a measuring tape to measure the length, height, and width of the collapsed device. Measurements should be taken to the nearest centimeter.
3. Record the dimensions in meters.
4. Verify that the length does not exceed 1.09m, width is within 0.90m and height is at most 1.05m.

As outlined, the device fit our dimension requirements. See Table 3 for results.

P1.5: Minimum Track Length

This testing procedure ensures that the track is in contact with more than one stair corner.

Equipment:

- Measuring tape

Procedure:

1. Use a measuring tape to measure the total track length in meters. Measurements should be taken to the nearest centimeter.
2. Verify that the track length meets or exceeds the minimum specified length of 0.8m.

Our measurements found that the track length fit our dimension requirements. See Table 3 for results.

P2.1: Set-Up Time

This test ensures that the device is quick to set up so that it will be convenient to use.

Equipment:

- Stopwatch
- 2 Participants (1 person in a wheelchair and 1 acting as the companion)

Procedure:

1. Place the device in its collapsed state.
2. Start the stopwatch and have 1 person begin setting up the device according to the standard procedure (Appendix E).
3. Stop the stopwatch once the device is fully set up and ready for use.
4. Record the time taken in seconds.
5. Repeat the test three times to ensure repeatability. See Table 5 for results of trials.
6. Verify that the average set-up time is within range (maximum 5 mins or 300 seconds).

Table 5: Results of Verification Procedure P2.1

Trial	Result
1	5 mins 21 s
2	4 mins 00 s
3	4 mins 08 s
Average	4 mins 30 s

After taking our first three trials with the same participants, we found that the average set up time was within our acceptable limit. We also noticed that with practice, set up time began to improve

meaning that our device would be further under the specified maximum set up time for regular users of the device.

P3.1: Weight Supported by Device

This testing procedure ensures the weight the device can support will be sufficient for the client's needs.

Equipment:

- 4 x 20 kg weights
- Wheelchair (19.0 kg)
- Staircase with 30° pitch
- Participant

Procedure:

1. Position the device on a flat, stable surface at the bottom of the staircase.
2. Place an empty wheelchair of a known weight into the device.
3. Have the participant move the device into the operational position on the staircase and hold its position.
4. Observe the device for any structural deformation or failure for a period of 1 minute for this initial weight increment.
5. Place a 20 kg weight onto the wheelchair seat and have the participant repeat steps 4-5 with the new weight.
6. Repeat this process until the total weight supported by the device exceeds the target maximum load of 90 kgs (including the weight of the wheelchair) or the device shows signs of deformation.
7. Once the target load is reached, maintain the load for 5 minutes without running the device or moving the device and verify the device remains stable.
8. Repeat the test three times at the maximum load and document the results, including any observed issues. See Table 6 for results of trials.

Table 6: Results of Verification Procedure P3.1

Weight (kg)	Result
19.0	No detectable deflection
39.0	No detectable deflection
49.0	No detectable deflection
69.0	No detectable deflection
89.0	No detectable deflection
99.0 Trial 1	No detectable deflection
99.0 Trial 2	No detectable deflection
99.0 Trial 3	No detectable deflection
Average	No detectable deflection

The results above show that the device was able to structurally support above the target maximum loading weight.

P4.1: Lifting Force

This testing procedure will evaluate how much force is required by the caregiver to utilize the device.

Equipment:

- Maple Leaf luggage scale, accurate to 0.5 kg
- 4 x 20 kg weights
- 1 x 10 kg weight

Procedure:

1. Attach a luggage scale to the handle of the device.
2. Apply a load equivalent to the maximum recommended load of 90 kg and measure the force applied by the caregiver for one minute in regular operation (30 seconds ascending and 30 seconds descending) as per the instructions in Appendix E.
3. Record a force reading from the ascending phase and one from the descending phase in kilograms.
4. Verify that the maximum force applied does not exceed the maximum allowable force applied by the operator (225.4 N or 23 kg.) If at any point during operation the force exceeds this threshold by more than 5 kg end the test.
5. Repeat the test three times and report the average result.

This verification procedure did not record a successful result (see Table 3.) Before applying the load, it was found that the device would require more than the maximum allowable force from the operator to move the tracks.

P5.1: Stair Pitches Accommodated

This procedure tests that the device can lift the maximum specified weight on stair pitches spanned our defined range of stair pitches our device can be used with (equivalent to a 20-40° incline.)

Equipment:

- 3 Staircases with different pitches (22°, 30° and 37°) that are a minimum of 3 stairs each
- Inclinometer accurate to 1°
- 19 kg Wheelchair
- 3 x 20 kg weights
- 1 x 10 kg weight

Procedure:

1. Measure the pitch of the stairs using an inclinometer.
2. Set the device at the base of the staircase.
3. Secure a wheelchair in the device and add the weights to the seat so that the combined weight in the device is 89 kg which is approximately the maximum specified weight.
4. Move the device into the operating position.
5. Take a preliminary, observational assessment of the device's ability to support the weight over the stairs. This is accomplished by ensuring that the tracks make contact with at least two stairs and can be easily balanced in this position.
6. Operate the device as per the operation manual (Appendix E), going up and down the staircase, and observe its movement over the steps. If the device does not move the maximum weight, reduce the weight until the device is operational and record the weight used for each stair pitch.
7. If the device maintains smooth functionality without interruption and can successfully lift the load up the stairs and lower it again, then the device is compatible with the measured staircase pitch.
8. Repeat the test three times and document the results, noting any operational issues. See Table 7 for results.
9. Repeat this test on at least other 2 staircases with varying pitches

Table 7: Results of Verification Procedure P5.1

Staircase pitch	Results	
	Stationary	While in operation
24.2°	Compatible	Not compatible
31.8°	Compatible	Not compatible
36.7°	Compatible	Not compatible

This verification procedure did not record a completely successful result (see Table 3.) The device was able to pass the observational assessments taken for the stationary device as outlined in step 5. However, the device could not accommodate the stair pitches in operation resulting in unsuccessful trials for the second portion of this test.

P6.1: Number of Stairs Accommodated and Battery Life

This testing procedure tests how many stairs the user can climb and descend with one full charge of the battery and how much time it takes to drain the battery.

Equipment:

- Staircase with 10 stairs of a 30° stair pitch.
- Fully charged battery
- 19 kg Wheelchair
- 3 x 20 kg weights

- 1 x 10 kg weight
- Stopwatch

Procedure:

1. Set the device at the base of the staircase.
2. Operate the device (as per Appendix E) loaded with a wheelchair and load whose weight totals 89 kg for a fully loaded condition. If the device does not support this weight, use the weight equivalent to the maximum load supported as determined in procedures P3.1 and P5.1. Observe its movement up and down the steps. Ensure the device maintains smooth functionality without interruption.
3. Record the total number of stairs the device successfully accommodates on a single charge and the time it took to drain the battery.
4. Repeat the test three times and document the results. Verify that the battery life meets or exceeds the expected duration and that the number of stairs accommodated meets or exceeds a minimum of 3 stairs.
5. Repeat the testing procedure 3 times.

Table 8: Results of Verification Procedure P6.1

Trial	Number of stairs climbed	Number of stairs descended	Battery run time
1	0	0	N/A
2	0	0	N/A
3	0	0	N/A
Average	0	0	N/A

Due to the previously mentioned difficulty in moving the tracks, the device did not record successful trials for this procedure.

P7.1: Compatibility with Different Wheel Placement Widths

This test is to ensure that the device can securely accommodate wheelchairs of varying widths, verifying its adaptability and stability for different wheelchairs.

Equipment:

- Wheelchairs of varying models and/or wheel widths

Procedure:

1. Adjust the platform width of the device to its maximum and minimum settings.
2. Place wheelchairs with different wheel placements on the platform and secure them.
3. Verify that the platform supports each wheelchair securely without any instability.
4. Repeat the test for a variety of wheelchair widths and document the results.

Table 9: Results of Verification Procedure P7.1

Wheelchair type	Result
Drive Blue Streak Wheelchair [13]	Compatible fit
Ki Mobility Rogue2 Wheelchair [14]	Semi-compatible fit, anti-tip wheels had to be removed and handlebars folded in
Apex C Carbon Fibre Chair [5]	Not compatible, seat back angle and handle width push the wheels further from the back of the frame than anticipated

This testing procedure concluded that the device was compatible with all manual wheelchairs available for the fit test.

P8.1: Water/Weatherproofing

This testing procedure is to verify that the electrical component housings offer sufficient water resistance, preventing moisture ingress that could lead to electrical failure.

Equipment:

- Water spray bottle (adjustable nozzle to simulate rain or splashes)
- Absorbent paper towels (for detecting moisture entry)
- Disassembly tools (for internal inspection)
- Stopwatch (for accurate time measurement)

Procedure:

1. Ensure the device is fully assembled and operational.
2. Disconnect all electrical components to prevent potential damage during testing
3. Identify critical areas of the housing (seams, access points, joints) that could be prone to water ingress.
4. Set the water spray bottle to the mist setting to simulate light rain. Hold the nozzle approximately 30 cm away from the housing.
5. Spray water three times per side (front, left, right, back, top, and bottom) to ensure complete coverage.
6. Change the spray nozzle to the direct stream mode to simulate accidental splashes and apply three short sprays to each side.
7. After water exposure, immediately inspect the exterior of the housing for visible water pooling or dripping.
8. Use paper towels to check for moisture penetration by wiping along the seams, joints, and openings.
9. Disassemble the housing carefully to check internal components for water ingress, corrosion, or dampness.
10. Allow the device to dry before repeating the test 3 times to ensure consistent performance.

11. Document results in a pass/fail table. If water ingress is detected, note failure points.

Table 10: Results for Verification Procedure P10.1

Trial	Result
1	Pass
2	Pass
3	Pass
Average	Pass

This testing procedure concluded that the electrical housing sufficiently protected the components within from

P9.1: Maximum Lateral Tilt Angle

This testing procedure is to verify that the device maintains a safe lateral tilt angle while operating on stairs with varying pitches, ensuring stability and user safety.

Equipment:

- 3 Staircases with different pitches (24.2°, 31.8° and 36.7°) that are a minimum of 3 stairs each
- Inclinometer accurate to 0.1°
- 19 kg Wheelchair
- 3 x 20 kg weights
- 1 x 10 kg weight

Procedure:

1. Place the device on a staircase with a known pitch within the expected operational range. Load device with the maximum load condition of 90 kg. If the device does not support this weight, use the weight equivalent to the maximum load as determined in procedures P3.1 and P5.1.
2. Attach a digital inclinometer to a fixed reference point on the device's frame for accurate lateral tilt angle measurements.
3. Take a preliminary assessment of the device's stability while moving the device into the operating position. This is accomplished by ensuring that the inclinometer does not read over 5° while the device is being moved into the operating position and that the device does not have a lateral tilt angle over 5° while resting in the operating position.
4. Record the highest inclinometer reading taken during the set-up movement.
5. Activate the motorized system and begin the ascent according to the procedure in Appendix E, recording the highest inclinometer reading during the ascent.
6. Repeat the process during the descent, ensuring the system maintains stability and does not exceed the allowable tilt angle (5°).

7. If the lateral tilt angle exceeds the threshold, identify potential causes of instability (e.g., uneven weight distribution or loss of track traction).
8. Repeat steps 1-7 for at least three different stair pitches (24.2°, 31.8°, and 36.7°) to simulate varying conditions within the specified range of 20-40°. See Table 11 for results.

Table 11: Results of Verification Procedure 9.1

Staircase pitch	Highest lateral tilt angle recorded	
	During set-up	While in operation
24.2°	0.7°	N/A
31.8°	0.8°	N/A
36.7°	1.1°	N/A

The device stayed successfully stable in the lateral direction while being tipped into the operational position on the staircase marking this test as partially successful although the test could not be passed for the operational portion of the trials.

5. Sustainability

An adaptation of the Green Project Management (GPM) P5 Sustainability Analysis [15] was used to identify 5 elements where the proposed stair climber design can make sustainable improvements to the client's current situation. Due to the nature of the project, the project team focused primarily on the areas of People and Prosperity for the section's evaluation categories. However, it should be noted that the project has had some positive impacts in the Planet pillar, specifically in the category consumption. For example, the adjustability of the design may extend our product's lifecycle as the client will not need to dispose of the product if she changes her wheelchair. The below table summarizes our evaluation results.

Table 12: Sustainability Evaluation Results

People Impacts	Initial Score	New Score	Change
Labor Practices and Decent Work	N/A	N/A	No Change
Society and Customers	2.0	4.0	2.0
Human Rights	2.0	4.0	2.0
Ethical Behavior	N/A	N/A	No Change
Overall People New Score	4.0		
Planet Impacts	Initial Score	New Score	Change
Transport	N/A	N/A	No Change
Energy	N/A	N/A	No Change
Land Air, and Water	N/A	N/A	No Change
Consumption	2.0	4.0	2.0
Overall Planet New Score	4.0		
Prosperity Impacts	Initial Score	New Score	Change
Project Feasibility	N/A	N/A	No Change
Business Agility	3.0	4.0	1.0
Local Economic Impact	N/A	N/A	No Change
Overall Prosperity New Score	4.0		

As shown, our analysis showed that the project has created significant improvement in the pillars of People and Prosperity. See Appendix A.3, Table A.3-A.7 for the complete, filled GPM table.

6. Project Limitations

This section of the report outlines the limitations identified during the design and testing phases of the StepFree stair climber system. It highlights the challenges encountered with both the design solution and the verification stage, providing a detailed analysis of each limitation's impact on the device's performance, safety, and usability. Potential causes for these issues have been explored, and possible solutions will be considered to address them in future iterations.

6.1 Design Solution Limitations

These limitations refer to the inherent challenges and constraints in the design of the StepFree stair climber system that could affect its performance, user safety, and usability.

6.1.1 Track Rotation Failure

The most critical limitation with the design solution is the failure of the tracks to rotate as intended during testing. The movement of the device relies heavily on the track system to provide traction and stability during ascension and descension on stairs. However, the current design fails to achieve effective load reduction, which is crucial for smooth operation. The track system is unable to significantly reduce the load during operation, placing unnecessary strain on the motor and track system. This inability to alleviate load affects the overall performance, causing the device to struggle with movement, especially when navigating stairs with steeper inclines or higher loads. Possible errors have been identified, including misalignment of the sprockets and tracks, or insufficient torque from the motor itself, and potential solutions are being explored to address these issues.

I. Potential Mechanical Misalignment in Sprockets and Tracks: While no conclusive evidence has been found to confirm that both the sprockets and tracks are misaligned, the issue with track rotation suggests that misalignment can be a possible contributor to track rotation failure. If the sprockets were not properly aligned with the track system, the teeth of the sprockets may fail to engage with the track, preventing rotation. Furthermore, even small tolerances in the sprocket or track positioning can cause a failure in track engagement. Potential causes include errors during assembly, slight imperfections in part manufacturing, or inadequate positioning of the sprockets relative to the tracks. Further examination of the assembly process and alignment tolerances will be needed to confirm this hypothesis.

II. Insufficient Torque Transmission: The motor's torque output may not be sufficient to power the track system under the required load conditions. While the 24V motor is theoretically powerful enough for this design, it might not be generating enough torque to overcome the combined weight of the wheelchair, user, and the device itself. When the

device encounters inclines or surfaces with higher resistance, the motor may struggle to transmit enough force to rotate the tracks. The motor's torque may be insufficient for proper track engagement, thus preventing the device from operating as intended.

III. Tracks Unsuitable for Application and Torque Requirements: The tracks themselves may not be suitable for the specific application and torque requirements of the device. The selected tracks are likely intended for a more heavy-duty application, and thus too thick for this device. This results in a high torque requirement to rotate the track assembly. To address this, lighter and smaller tracks could be considered, which would reduce the load on the motor and potentially improve the overall performance of the device.

6.1.2 Excessive Weight

The current prototype weighs significantly more than the target weight of 23 kg, reaching 40.2 kg. This excessive weight is primarily due to the structural components, such as the heavy-duty steel frame, motor, and track system. The initial design was structured around an off-the-shelf aluminum dolly [16] advertised to be rated for 330 lbs, however, when the part was received the actual load rating was determined to be 150 lbs, which is insufficient for this application. The design was then adapted to a use a custom steel frame. This material change resulted in a much higher prototype weight than initially anticipated.

I. Portability and Storage Issues: The excessive weight directly impacts the device's portability. Users who need to move the device between locations or store it in compact spaces will find this cumbersome. For example, lifting and transporting the device could be challenging in environments such as small apartments or areas where manual handling of the device is necessary. The awkward shape and weight could also complicate storage in tight spaces, such as vehicles in our case.

II. Handling and Physical Strain on Operator: The weight and awkward shape of the device poses a challenge for the user who must lift or reposition the device, particularly if the user has limited physical strength. This physical burden can reduce the practicality of the device, especially in emergency situations or when frequent mobility adjustments are needed.

6.1.3 User Safety and Stability Concerns

The device is designed to maintain stability with a maximum tilt angle of 5°, but various factors could compromise this limit during operation.

I. Instability Under Load: When carrying a heavy load, such as a user and their wheelchair, the weight distribution may shift, causing the tilt angle to exceed the 5° limit. This can

result in instability, particularly if the load is unevenly distributed or if the device is used on stairs with irregular surfaces. If the tilt angel increases significantly, there is a risk of it tipping over, which could cause harm to the user.

II. Track Misalignment and Instability: Uneven stair surfaces, coupled with possible misalignments in the sprockets, tracks, or frame components, could worsen the instability of the device. Even minor misalignment or the lack of proper engagement between both the tracks and sprockets could result in the tracks slipping, causing any unwanted erratic movements or jerking motion that could potentially destabilize the device. Ensuring proper alignment and maintaining the stability of key components during operation is crucial for user safety.

6.1.4 Limited Budget

The project faced significant constraints due to a limited budget, which affected overall scope and quality of the design solution. The total project budget was allocated as follows: $1,600 through the University of Manitoba, and $500 through Tetra Society. Making our total budget for the project $2,100. While this funding allowed for initial development, it posed limitations in several key areas:

I. Restricted Materials and Components; Due to budget constraints, the selection of materials and components was limited. The need to stay within financial limits led to compromises in our material quality or performance, such as opting for less expensive components that may have not fully meet the torque, weight, or durability requirements of the device. This restricted the ability to source the most suitable materials, which ultimately impacted the device's functionality, durability, and performance.

II. Design Modifications and Features: Limited funding also restricted the ability to implement advanced design modifications or more features that could improve the overall efficiency and safety of the device. For example, higher-quality motors, more efficient battery systems, or premium track materials. As a result, the design had to focus on core functionality, often forging enhancements that could have improved the user experience and performance.

III. Testing and Validation Limitations: Limited funding restricted the scope of testing and prototyping, preventing extensive iterations and testing under real-world conditions and environments, which impacted design refinements and issue identifications.

IV. Prototyping Constraints: The ability to create several prototypes or refinements to the design iteratively was limited by our budget. Prototyping often requires significant

financial resources to build, test, and refine multiple versions of the proposed design. With a constrained budget, the project had to rely on fewer prototypes or lower-cost alternatives, potentially limiting the ability to test a variety of design options to find the most effective solution.

6.2 Verification Tests Limitations

The verification stage is essential for validating that the design meets the functional requirements outlined in the project specifications. Several limitations identified during this phase have affected the successful completion of key tests.

6.2.1 Test Results for Track Rotation

The track rotation testing did not provide conclusive results due to several factors, such as inconsistent load testing and variations in track engagement. This limitation makes it difficult to definitively identify whether the problem stems from mechanical misalignment, torque insufficiency, or track selection. The following factors impacted the verification procedure:

I. Variable Load Conditions: During testing, the varying load conditions, such as different wheelchair weights, user sizes, and incline degrees, were not fully accounted for in the initial test design. As a result, the tests did not consistently replicate the real-world scenarios in which the device is expected to perform. This inconsistency hindered the identification of the exact cause of track rotation failure, as the device struggled with specific weight ad incline combinations that were not properly simulated during testing procedure.

   Impact: The track system's performance was not fully evaluated across the wide range of possible user and environmental conditions. This limited the ability to assess how the system would perform under high or variable loads or inclined surfaces.

II. Inconsistent Track Engagement: The failure could be attributed to the misalignment, insufficient torque, or improper track selection. However, the testing did not provide a clear diagnosis of this issue. Variations in track engagement during testing, caused by potential misalignment or inconsistencies in part positioning, could have further complicated the analysis.
   Impact: These uncertainties in track engagement made it difficult to pinpoint whether the failure was because of a mechanical misalignment, torque insufficiency, or the type of track used.

6.2.2 Weight Capacity and Durability Testing

While the device passed initial weight capacity tests (it supported up to 99 kg without noticeable deformation), further testing under dynamic loading conditions failed to simulate the real-world stress that the device would experience during actual operational use.

I. Limitations: The weight capacity tests were conducted under static conditions, which did not fully replicate the dynamic loads that the device would encounter during practical use. Factors such as sudden shifts in weight distribution or movement-induced stressed had not been accounted for.

   Impact: The lack of dynamic loading simulations limited the ability to accurately assess the device's durability and its ability to withstand real-world forces over time.

6.2.3 Battery Efficiency Testing

Battery efficiency testing focused on verifying whether the device could function for the required number of stairs or flights per charge. However, due to the track rotation issue, the device could not complete the required two flights to confirm battery life.

I. Limitations: The device was unable to run for an extended period when loaded, due to the failure in track rotation, we could not verify whether the battery would support the device in lifting the wheelchair for a minimum of two flights. The track system's failure prevented the device from engaging the tracks properly, which hindered the completion of the required battery life tests under realistic conditions.

   Impact: Since the device did not reach the necessary operational condition, the battery life could not be fully assessed in terms of its ability to support the system for multiple flights. This limitation prevents an accurate evaluation of the battery's efficiency under the load conditions it is intended to operate for.

6.2.4 Limitations in Verifying Compatibility with Steep Pitches

The device was tested for compatibility with stair pitches ranging from 20° to 40°, but due to the track rotation failure, the device could only be tested in a static configuration.

I. Limitations: While the device was verified to be stationary and compatible with stairs in the specified pitch range (20°-40°), the failure in track rotation prevented the system from engaging properly to test performance on stairs with varying inclines. The track system's inability to rotate correctly hindered the device's ability to navigate stair at steeper angles, thus preventing full verification under load conditions.

Impact: The failure to test the device's functionality on actual steeps pitches limits the ability to assess whether the system can efficiently navigate the inclines while subject to load. The track rotation issue must be resolved before evaluating performance on various stair pitches.

6.2.5 Limitations in Verifying Adaptability to Chair Changes

The device was tested for adaptability to wheelchairs within the 40-70 cm width range, but it did not fit all wheelchairs within this specified range.

I. Limitations: During testing, the device was found to be incompatible with some wheelchairs within the 40-70 cm width range. The variable and customizable nature of wheelchair design results in a large range of sizes and geometries. Factors such as push handle width and seat back tilt angle have significant impacts on the way the wheelchair interfaces with the device. This limitation was not fully anticipated in the verification tests, and the device's ability to accommodate a wider variety of wheelchair dimensions was not properly validated.

   Impact: The failure to confirm compatibility with all wheelchairs within the intended width range affects the device's versatility and limits its usability for users with different wheelchair dimensions.

6.2.6 Safety and Stability Verification

Safety and stability were evaluated based on the device's ability to maintain a maximum tilt angle of 5° under load, but further verification under dynamic conditions was limited.

I. Limitations: While the device was stable under stationary conditions, dynamic testing involving movement of over stairs with variable surfaces was not fully conducted. The tilt angle could be affected by real-world factors such as uneven stairs, misalignment of tracks, or sudden shifts in load.

   Impact: The failure to verify stability under movement and real-world conditions means the device's ability to maintain stable during actual operation is not fully validated.

These limitations had significant implications on the function of the device, most notably the tracks' inability to rotate. However, they highlight potential next steps in optimizing the design of the StepFree stair climber which will be discussed in detail in the next section.

7. Recommendations

Based on the design and testing outcomes, several recommendations have been identified to enhance the StepFree stair climber's functionality, safety, and usability. These improvements focus on addressing the primary challenges encountered during the development and verification stages, ensuring that future iterations of the device better meet the client's needs.

7.1 Design Improvements

The design of the device would benefit from some modifications that were noted in retrospect after the build process concluded.

7.1.1 Modify the Track System

The use of smaller or thinner tracks would reduce torque requirements and improve power transmission efficiency [17], [18]. The current tracks are rigid and require excessive force to rotate, leading to performance issues. Exploring alternative track options, such as those used in robotic applications, may provide a more effective solution.

7.1.2 Increase Motor Power Output

The current motor's power is minimal for the intended application, particularly when operating under full load. A higher-power motor providing more speed or torque and a corresponding gearbox with improved torque multiplication should be considered to enhance the device's ability to navigate stairs reliably.

7.1.3 Reduce Overall Device Weight

The prototype exceeded the target weight of 23 kg, impacting portability and usability. Alternative lightweight materials, such as aluminum or composite materials, should be explored for structural components to reduce the overall weight while maintaining strength and durability. Initial designs included the use of an aluminum telescoping frame but upon arrival, the rated load indicated did not match the advertised value and it was unsuitable for our application. In order to compensate for the lower strength of lighter materials, different tube profile options could be explored.

7.1.4 Improve Wheelchair Compatibility

The seat-back angle of our client's chair and the width between the handles pushed the axles of the wheelchair further away from the back of the frame of the device than anticipated. Suggested improvements for the wheel brackets to ensure compatibility would be trimming the bottom half of the wheel brackets shorter along the front edge and making the adjustable section shorter. Additionally, the frame could be extended forward further to make up for the three to five inches

of additional forward extension needed to ensure a good fit for the chair. Alternately, earlier in design, if the width between the handles of the chair was known, the width of the device could have been decreased down to accommodate the space between the handles, however, with the seat-back angle being on the larger end of typical values, this may have put the client in a less comfortable position when the device is in use.

7.1.5 Improve Track Alignment and Assembly

Ensure proper sprocket and track alignment to eliminate potential mechanical interference preventing smooth operation. A precision assembly jig or alignment tool could be developed to facilitate accurate positioning during manufacturing and assembly.

7.1.6 Enhance Portability Features

Adding swivel casters to the front wheels would improve maneuverability when the device is not in operation. Additionally, shifting the center of gravity in the folded configuration further over the base of support of the caster wheels would improve balance and ease of transport.

7.2 Electrical Enhancements

Improvements could also be made for the electrical system of the device. This would aid in the operation of the device

7.2.1 Improve Waterproofing and Weather Resistance

While the electrical housing passed water resistance testing, additional sealing measures such as rubber gaskets or conformal coatings on circuit components should be considered to further improve reliability in outdoor conditions.

7.2.2 Optimize Battery Life and Power Efficiency

Given the device's inability to complete stair-climbing tests, further investigation into power consumption efficiency is required. A higher-capacity battery or a more energy-efficient motor system should be considered to extend operational time.

7.3 Process and Testing Refinements

Some additional testing and process modifications should also be made in future projects.

7.3.1 Adjust Project Timeline for Part Sourcing and Testing

Delays in ordering and receiving components impacted testing and verification. Future development should allocate additional time for sourcing and pre-testing individual subcomponents before final assembly.

7.3.2 Develop a Track Assembly Safety Tool

A specialized tool or fixture should be designed to safely assist with track installation and tensioning, reducing the risk of errors or injuries during assembly.

By implementing these recommendations, future iterations of the StepFree stair climber can achieve improved functionality, reliability, and usability, better fulfilling the client's accessibility needs.

7.3.3 Develop Procedure for Track Friction and Resistance Testing

To better understand the track resistance and determine the required torque for movement, a structured testing procedure should be implemented:

Objective:
Evaluate the coefficient of friction of the tracks against different stair materials and determine the load at which the device starts to slide down the stairs under progressive loading.

Equipment Required:

- StepFree stair climber
- Various weights (5 kg, 10 kg, 15 kg, etc.)
- Inclinometer
- Stopwatch
- Digital scale (to measure total mass)
- Staircases, assorted

Procedure:

Setup:

- Place the StepFree in its operating position on a staircase, ensuring full track contact with the stair surface.
- Use the inclinometer to measure and record the stair pitch.

Incremental Loading:

- Add an initial weight (5 kg) onto the device, ensuring even distribution.
- Observe whether the device remains stationary or begins to move.
- If no movement occurs, progressively add weight in 5 kg increments, pausing after each addition to check for movement.

Determine Threshold Load:

- Identify the total weight at which the device just starts to move on its own without external force applied.
- Record this threshold weight for each stair surface tested (wood, carpet, concrete).

Calculate Track Resistive Force:

The resistance to movement is determined by the frictional force holding the device in place.

- Using the measured threshold weight (m_t), calculate the resistive force (F_f) using:

$$F_f = m_t \cdot g \cdot \sin(\theta)$$

where: m_t = total threshold mass (kg); g = acceleration due to gravity (9.81 m/s²); θ = stair pitch (degrees)

Repeatability:

- Conduct three trials per surface type and calculate the average threshold weight and frictional force for each.

Expected Outcome:

- Establish the minimum force required to overcome static friction in the track system.
- Identify variations in track resistance across different surfaces.
- Determine whether track modifications are needed to reduce friction and improve mobility.

The application of these recommendations would create and allow for a smoother design and manufacturing process in future iterations or modifications of the StepFree stair climber. Furthermore, it would increase the efficacy, safety and user friendliness of the device.

8. Conclusion

Due to a lack of wheelchair accessible infrastructure, manual wheelchair users often struggle to navigate the environments that they find themselves in [19]. This was clearly an issue for our client who reached out to Tetra Society, the sponsors of our project. Our project set out to improve stair accessibility for manual wheelchair users. The StepFree stair climber aims to fill this void that is present in the current market. The design securely interfaces with a range of wheelchairs, with numerous adjustments, such as wheel width and wheel diameter, to adapt the specifications required by the user. StepFree utilizes motorized tracked wheels, similar to those found on excavators and tanks, to provide button-operated lifting force for controlled ascent and descent on stairs. The device features telescoping and collapsible components, allowing it to be compacted for ease of storage and transportation. Our first-generation prototype adequately passed weight capacity, collapsible size requirement, and set up time testing.

Our stair climber directly benefits the client by enabling safer and practical access to staircases. Furthermore, the design impacts the accessible engineering space by providing another solution for manual wheelchair users who face similar accessibility challenges. With the addition of industrial-scale manufacturing and custom-made parts, the device could become more affordable, benefiting a wider user base.

It is necessary to mention that our design did face significant limitations, mainly with track movement failure. The current design is unable to achieve the effective load reduction that the design was intended to accomplish. Our team took account of this and came up with potential solutions that could fix the issue. The track system could potentially be affected by mechanical misalignment in the sprockets and tracks which could be resolved by the development and implementation of a precision assembly jig or alignment tool. Another possible solution would be to install a motor with higher torque transmission. Additionally, a lighter weight track may be more suitable for the load requirements of this device.

Another limitation that the project faced was the excessive weight caused by the steel material used to manufacture the frame. Since the original aluminum frame obtained did not meet the specifications advertised, a custom manufactured steel frame was implemented. Redesigning the custom frame to be made from aluminum could aide in achieving the target weight specifications. The previous recommendation of selecting a lighter track profile would also contribute to meeting this specification.

While our the StepFree device was found to be compatible with several wheelchair models, not all wheelchairs tested were found to be compatible with the device. In particular, wheelchairs with large seat back angles are not able to be secured close enough to the back of the frame for stable

transportation. This can be addressed by modifying some of the frame dimensions, including those of the frame width and the wheel bracket to accommodate a greater range of manual wheelchairs.

Despite these challenges, the proof of concept validates the need for further refinement of the design. The StepFree stair climber, with the necessary adjustments, will ultimately fulfill its intended purpose, offering a meaningful contribution to the accessibility market and improving the mobility and independence of manual wheelchair users.

9. Reference List

[1] M. Khalili, C. Jonathan, N. Hocking, M. Van der Loos, W. B. Mortenson and J. Borisoff, "Perception of autonomy among people who use wheeled mobility assistive device: dependence on environment and contextual factors," *Disability and Rehabilitation: Assistive Technology,* vol. 18, no. 7, pp. 1066-1073, 2023.

[2] E. Miller and D. Yee-Melichar, "Universal Design as a Rehabilitation Strategy: Design for the Ages By Jon A. Sanford," *Educational Gerontology,* vol. 40, no. 2, pp. 154-156, 2014.

[3] F. N. Lee, H. A. Feldner, B. S. Balcazar, B. S. Bonfiglio, F. Balcazar and S. P. Harris, "The interdependence-Human Activity Assitive Technology Model (i-HAAT): A contemporary conceptual approach to assitive technology outcomes research," in *RESNA Annual Conference - 2022*, 2022.

[4] Cleveland Clinic, "Quadriplegia," 8 October 2022. [Online]. Available: https://my.clevelandclinic.org/health/symptoms/23974-quadriplegia-tetraplegia. [Accessed 15 October 2024].

[5] Motion Composites, "APEX C: Carbon Fiber Ultralightweight Wheelchair," [Online]. Available: https://www.motioncomposites.com/en_intl/products/rigid-wheelchairs/apex-c?___from_store=en_ca. [Accessed 17 September 2024].

[6] Promenaide, "How to Measure for a Basic Handrial Installation," [Online]. Available: https://promenaid.com/blog/how-to-measure-for-a-handrail#:~:text=Measuring%20Handrail%20Length,floor%20at%20the%20lower%20end.. [Accessed 14 October 2024].

[7] Government of Canada, "National Building Codes of Canada 2015 Volume 2 9.8.4," 28 September 2018. [Online]. Available: https://publications.gc.ca/collections/collection_2019/cnrc-nrc/NR24-28-2018-eng.pdf. [Accessed 1 October 2024].

[8] Home Depot, "Durhand 6-Wheels Climbing Stairs Trolley Hand Truck Foldable Steel Load Cart," [Online]. Available: https://www.homedepot.ca/product/durhand-6-wheels-climbing-stairs-trolley-hand-truck-foldable-steel-load-cart/1001686647. [Accessed 4 December 2024].

[9] MS3C, "MS3C-330ATB, All-Terrain Battery Operated Stair Evacuation Chair," [Online]. Available: https://ms3c.co/collections/emergency-action-plan/products/ms3c-330atb-all-terrain-battery-operated-stair-evacuation-chair. [Accessed 19 September 2024].

[10] Government of Canada, "Canada Occupational Health and Safety Regulations: Section XIV," 18 August 2024. [Online]. Available: https://laws-lois.justice.gc.ca/eng/regulations/sor-86-304/index.html. [Accessed 16 October 2024].

[11] Nissan, "2025 Rogue Brochure Interior & Capacities," [Online]. Available: https://www.nissanusa.com/interactivebrochures/suvs/rogue/rogue-interior-capacities/index.html?nav=top. [Accessed 14 October 2024].

[12] Amazon CA, "Amavoler Rear Brake Drum Assembly for Mini Gas Electric Scooter M BK13 24V 36V Motorcycle," [Online]. Available: https://www.amazon.ca/amavoler-Assembly-Electric-Scooter-Motorcycle/dp/B0CH4GT468/ref=pd_day0_d_sccl_3_9/133-6089728-8600747?pd_rd_w=Kl4mu&content-id=amzn1.sym.c1e913ef-9aad-488b-bee9-f69177882536&pf_rd_p=c1e913ef-9aad-488b-bee9-f69177882536&pf_rd_r=W0ZGY. [Accessed 19 February 2025].

[13] Drive Medical, "Blue Streak Wheelchair," [Online]. Available: https://shop.drivemedical.com/us/en/products/mobility/wheelchairs/standard-wheelchairs/blue-streak-wheelchair/p/978-1. [Accessed 18 March 2024].

[14] Ki Mobility, "Rogue2," [Online]. Available: https://www.kimobility.com/Product.action?productName=Rogue2. [Accessed 17 March 2025].

[15] Green Project Management, "The GPM P5 Standard for Sustainability in Project Management," 2025. [Online]. Available: https://greenprojectmanagement.org/gpm-standards/the-p5-standard-for-sustainability-in-project-management.

[16] Amazon CA, "Double Rhombus Dolly Cart Folding Hand Truck Trolley, 330 Lbs Capacity Aluminum Portable Cart with 2 Rubber Wheels, Heavy Duty Luggage Cart Small Dolly with Telescoping Handle, for Carrying, Loading," Double Rhombus, [Online]. Available: https://www.amazon.ca/dp/B0914SBMNW?ref=ppx_yo2ov_dt_b_fed_asin_title. [Accessed 2025].

[17] VercoTrack, "Stair Climbing Track 80×40.2×42," [Online]. Available: https://vercotrack.com/robot-tracks/small-robot-track-80x40-2x42/. [Accessed 2025].

[18] VercoTrack, "Military Robot Track 60×31.428×72," [Online]. Available: https://vercotrack.com/robot-tracks/military-robot-track-60x31-428x72/. [Accessed 2025].

[19] Y. Hachouch, H. Akef, C. McDiarmid, M. Vachon, S. Morris and D. Simionescu, "Barriers to Accessibility in Public Spaces: Findings from the 2022 Canadian Survey on Disability," Statistics Canada, 2024. [Online]. Available: https://www150.statcan.gc.ca/n1/pub/89-654-x/89-654-x2024003-eng.htm. [Accessed March 2025].

[20] Amazon CA, "Heavy Duty Rubber Caster Wheel with Rigid Non-Swivel Top Plate - 2-Inch - 125 lb. Load Capacity," Soft Touch, [Online]. Available: https://www.amazon.ca/dp/B0083MQVD2?ref=ppx_yo2ov_dt_b_fed_asin_title. [Accessed 2025].

[21] Amazon CA, "Kutrick 2pcs Scooter Wheels - 100mm Scooter Wheels Replacement Pair - Smooth Bearing Installed | Plastic Core 100mm Scooter Wheels for Razor Fuzion Vokul Scooters with 100mm Wheels," Kutrick Sports-CA, [Online]. Available: https://www.amazon.ca/dp/B0C6FZY28G?ref=ppx_yo2ov_dt_b_fed_asin_title&th=1. [Accessed 2025].

[22] 8020.net, "Part No. 1050 - 1.00” X 0.50” T-Slotted Profile - Single Open T-Slot," [Online]. Available: https://8020.net/1050.html. [Accessed 2025].

[23] Amazon CA, "PGN UCP204-12 Pillow Block Bearing - Pack of 2 Mounted Pillow Block Bearings - Chrome Steel Bearings with 3/4" Bore - Self Alignment," PGN Bearings, [Online]. Available: https://www.amazon.ca/dp/B07MWH4BWZ?ref=ppx_yo2ov_dt_b_fed_asin_title. [Accessed 2025].

[24] Amazon CA, "Kayak Paddle Push Button Spring Snap Clip Locking Tube Pins 8mm Single Solid pin (4)," H-Ray Store, [Online]. Available: https://www.amazon.ca/dp/B0CGW2QH2Q/?coliid=I3A33UCGV0ADWT&colid=4NHNJESMIWRE&ref_=list_c_wl_lv_ov_lig_dp_it&th=1. [Accessed 2025].

[25] Amazon CA, "uxcell DC24V 80W 100RPM 8N.M Reversible Worm Gear Motor High Torque Speed Reducing Electric Gearbox Motor-JCF63R," Amadeo City, [Online]. Available: https://www.amazon.ca/dp/B0732H779L?ref=ppx_yo2ov_dt_b_fed_asin_title&th=1. [Accessed 2025].

[26] Amazon CA, "STEPPERONLINE Planetary Gearbox Gear Ratio 5:1 Backlash 15 arc-min for 10mm Shaft Nema 23 Stepper Motor," StepperOnline, [Online]. Available: https://www.amazon.ca/dp/B0BPGLLW11?ref=ppx_yo2ov_dt_b_fed_asin_title&th=1. [Accessed 2025].

[27] Amazon CA, "MAPLE ACE #25 Roller Chain 10 Feet Plus Connecting Master Link," Maple Ace, [Online]. Available: https://www.amazon.ca/dp/B09NMXYX44/?coliid=I1OCO4UUI8GABI&colid=4NHNJESMIWRE&psc=1&ref_=list_c_wl_lv_ov_lig_dp_it. [Accessed 2025].

[28] Amazon CA, "uxcell 24 Tooth Roller Sprocket B Type, #25 Chain, Single Strand 1/4" Pitch, 19mm Bore Black Oxide C45 Carbon Steel, Keyway with Set Screws for ISO 04C," Amadeo City, [Online]. Available: https://www.amazon.ca/dp/B09RB2XWCP?ref=ppx_yo2ov_dt_b_fed_asin_title&th=1. [Accessed 2025].

[29] Amazon CA, "uxcell 24 Tooth Roller Sprocket B Type, #25 Chain, Single Strand 1/4" Pitch, 14mm Bore Black Oxide C45 Carbon Steel, Keyway with Set Screws for ISO 04C,"

Amadeo City, [Online]. Available: https://www.amazon.ca/dp/B09RB1DZ9Z/?coliid=IMEIT95DX3ON0&colid=4NHNJESMIWRE&psc=1&ref_=list_c_wl_lv_ov_lig_dp_it. [Accessed 2025].

[30] Amazon CA, "Hyacinth 10PCS Premium Bike Shift Cable, Professional Bicycle Shift Wire Kit for Mountain and Road Bicycle, for Free 5 O-Rings, 10 End Ferrules and 20 End Caps," Layger, [Online]. Available: https://www.amazon.ca/dp/B07RGXBX22?ref=ppx_yo2ov_dt_b_fed_asin_title. [Accessed 2025].

[31] Amazon CA, "UQMIQURA Brake Clutch Levers, 1 Pair Aluminium Alloy Bicycle Hand Brakes Levers, Cycling Brake Levers Handle Brake Levers 2.2 cm Diameter for Most Bicycles - Black," UQMIQURA, [Online]. Available: https://www.amazon.ca/dp/B0D3M5RP18?ref=ppx_yo2ov_dt_b_fed_asin_title. [Accessed 2025].

[32] "Robot Track 100x40x50," VercoTrack, [Online]. Available: https://vercotrack.com/robot-tracks/robot-track-100x40x50/. [Accessed 2025].

[33] Grainger Canada, "POLYOLEFIN TREAD WHEEL, 4 IN WHEEL DIAMETER, 1 IN WHEEL W, 140 LB LOAD RATING," 2025. [Online]. Available: https://www.grainger.ca/en/product/Iron-Tread-Wheel%2C4%22%2C140-lb-/p/WWG426A73?analytics=cart.

[34] Amazon CA, "XiKe 4 Pcs ID 3/4" x OD 1-3/8" Lawn Mower Wheel Flanged Bearing Replacement for JD AM118315, AM127304, Toro 110513, 251-210, Gravely 011193, MTD 741-0141, Case IH-384881-R93 & Bobcat 2188123-03 Etc.," XiKe Bearings USA, [Online]. Available: https://www.amazon.ca/dp/B07H4RSV6Z?ref=ppx_yo2ov_dt_b_fed_asin_title&th=1. [Accessed 2025].

[35] Amazon CA, "T-Handle locking pin, 304 stainless steel Grip push-button locking quick-release pin with safety rope (Φ1/4“ x 1-37/64”)," Hangzhou Lin'an Yile Hardware Business Department, [Online]. Available:

https://www.amazon.ca/dp/B0CR6HRQW6/?coliid=I1076EQ7GNZ6RE&colid=4NHNJESMIWRE&psc=1&ref_=list_c_wl_lv_ov_lig_dp_it. [Accessed 2025].

[36] Amazon CA, "Greenworks 24V 4Ah USB Battery, BAG709, Green," Greenworks, [Online]. Available: https://www.amazon.ca/dp/B08L7WLLBL?ref=ppx_yo2ov_dt_b_fed_asin_title. [Accessed 2025].

[37] Amazon CA, "Adapter for greenworks or creabest 24volt Compatible lithitum Battery 12 Gauge, Black," TerrafirmaTechnology, [Online]. Available: https://www.amazon.ca/dp/B09C6P123Y?ref=ppx_yo2ov_dt_b_fed_asin_title. [Accessed 2025].

[38] Amazon CA, "Greenworks 24V 4A Dual Port Charger, CAG817, Green," Greenworks, [Online]. Available: https://www.amazon.ca/dp/B0918Y68MV?ref=ppx_yo2ov_dt_b_fed_asin_title. [Accessed 2025].

[39] Digikey, "DC60S5 Solid State Relay," Sensata-Crydom, [Online]. Available: https://www.digikey.ca/en/products/detail/sensata-crydom/DC60S5/221845. [Accessed 2025].

[40] 80/20, "Part No. 4108 - 10 Series 2 Hole - Lite Inside Corner Bracket," [Online]. Available: https://8020.net/4108.html. [Accessed 2025].

[41] Princess Autio, "POWERFIST W-Series Weld-On Hubs," Powerfist, [Online]. Available: https://www.princessauto.com/en/w-series-weld-on-hubs/product/PA1000001384?skuId=3845179. [Accessed 2025].

[42] Princess Auto, "BRABER EQUIPMENT #35 Chain Weld-On Sprockets," [Online]. Available: https://www.princessauto.com/en/-35-chain-weld-on-sprockets/product/PA1000001394?skuId=9355843. [Accessed 2025].

[43] B. Phillips and H. Zhao, "Predictors of assistive technology abandonment," *Assist Technol.,* vol. 5, no. 1, pp. 36-45, 1993.

[44] CVL Engineers, "Maximum Span of Cantilever Beams," [Online]. Available: https://cvl-eng.ca/max-span-of-cantilever-beams/#:~:text=The%20deflection%20limit%20for%20cantilever,wood%2C%20steel%20or%20concrete).. [Accessed 4 February 2025].

Appendix A: Design Data

Appendix A includes tables and figures used to assess and track the feasibility, and sustainability of the project/design.

A.1 Weighted Decision Matrix

The below weighted decision matrix was reviewed with client to verify accurate rating and priorities given to the design criteria considered.

Table A. 1 Weighted Decision Matrix

	Criteria 1	Criteria 2	Criteria 3	Criteria 4	Criteria 5	
CRITERIA DESCRIPTION	Cost and manufacturability	Portability	Universality	Force reduction ability	User comfort	
Notes	Budget and ease of parts sourcing	Size and weight restricitions	Compatible with different stairs and different wheelchairs		Perceived safety	
	Criteria 1	**Criteria 2**	**Criteria 3**	**Criteria 4**	**Criteria 5**	**WEIGHTED SCORE**
WEIGHT	4	4	1	5	3	17
	24%	24%	6%	29%	18%	100%
OPTIONS	**Criteria 1 SCORES**	**Criteria 2 SCORES**	**Criteria 3 SCORES**	**Criteria 4 SCORES**	**Criteria 5 SCORES**	
Simple cluster wheel	5	5	1	1	1	2.9
Motorized cluster wheel	3	4	1	3	2	2.9
Tracked wheel - modular unit	1	2	5	5	4	3.2

Design Description
Similar to stairclimbing dolly but with added gear mechanism to add breaks and any added modifications to support the size of a wheelchair.
Cluster wheel with gear mechanism and added motor or battery to aide in power for climbing up and down stairs.
Tracked wheel with modular tracks in order to tailor the length to a determined minimum length to accommodate different stair pitches.

A.2 Bill of Materials

The bill of materials includes all materials required for the construction of the device. Any materials purchased and returned or otherwise not utilized in the final build have been excluded.

Table A. 2 Bill of Materials

Sys	Component	Qty	Price	Source
Frame	Steel Tube Stock	550cm	$0.00	*
	Assorted Scrap Sheet Steel and Aluminum	Misc.	$0.00	*
	Caster Wheel	2	$12.80	[20]
	100mm Rubber Wheel	2	$18.90	[21]
	1x1/2" Aluminum T-Slot Rail	120cm	$71.40	[22]
	3/4" Pillow Block Bearing	2	$34.27	[23]
	Telescoping Spring Button	2	$6.99	[24]
	Spring Button Tool	2	$0.00	**
Subtotal:			$144.36	
Drivetrain	Motor	1	$126.88	[25]
	Gearbox	1	$111.48	[26]
	Motor-Gearbox Coupler	1	$0.00	*
	#25 Chain	30 cm	$29.85	[27]
	3/4" Bore Sprocket	1	$20.09	[28]
	14mm Bore Sprocket	1	$19.79	[29]
	3/4" Keyed Drive Shaft	1x	$0.00	*
Subtotal:			$308.09	
Braking	Drum Brake	2	$63.26	[12]
	Brake Cable Housing	2	$0.00	**
	Brake Cable	2	$19.00	[30]
	Brake Lever	2	$10.99	[31]
Subtotal:			$93.25	
Track	VercoTrack VTR-051 Track	2	$477.76	[32]
	100mm Drive Sprocket	2	$291.67	[32]
	4" Plastic Support Wheels	16	$50.54	[33]
	100mm Tensioner Wheels	4	$35.76	[21]
	5/16" Shafts	12cm x16	$0.00	*
	1/4" Aluminum Side Guards	4	$0.00	*
	3/4" Bearings	4	$13.19	[34]
	1/4" Quick Release Pin	2	$17.77	[35]
Subtotal:			$886.69	

Sys	Component	Qty	Price	Source
Electrical Components	24V Battery	2	$143.96	[36]
	24V Battery Connector	1	$32.47	[37]
	24V Battery Charger	1	$50.12	[38]
	Crydom DC60S5 Solid State Relay	1	$60.00	[39]
	TE barrier block connector	1	$0.00	*
	TVS Diode	1	$0.00	*
	DPDT Switch	1	$0.00	*
	Pushbutton Switch	2	$0.00	*
	Electrical Box	1	$0.00	*
	PVC Conduit	1	$0.00	**
	Coiled Wire	175cm	$0.00	*
	9V Battery	1	$0.00	**
	9V Battery Connector	1	$0.00	*
Subtotal:			$286.55	
Hardware & Fasteners	1/4" Carriage Head Bolt	8	$19.52	*
	1/4" Wingnuts	8	$0.00	*
	1/4” Bolt	55	$0.00	*
	1/4” Nut	68	$0.00	*
	3/8" Bolt	4	$0.00	*
	3/8" Washer	4	$0.00	*
	3/8" Nut	22	$0.00	*
	5/16" Bolt	10	$0.00	*
	5/16" Washer	8	$0.00	*
	5/16" Nut	80	$0.00	*
	Inside Corner Bracket	4	$49.14	[40]
	3/4" W Series Weld-on Hub	4	$14.52	[42]
	Weld-on #35 Sprocket, 26T	2	$42.76	[43]
	Buckle Strap	3	$0.00	**
	Head Rest	1	$0.00	**
	Drive Shaft Keys	5	$0.00	*
Subtotal:			$125.94	
Total:			$1,844.88	

*Sourced from the Biosystems fabrication and electronics labs

**Sourced from donations or scrap materials

A.3 Sustainability GPM Tables

Table A. 3 People Impacts in the category of Society and Customers of the GPM-V5 [15]

People Impacts - Category: Society and Customers						
Element	Description of the situation	Potential Impact	Initial Impact Score	Proposed Response	New Impact Score	Change
Public Policy and Compliance	Currently, the client's family must lift her and her wheelchair which exceeds a safe load for them to be regularly carrying [10].	High accident and injury potential to the companions lifting the wheelchair and client.	2	Proposed design reduced weight/ load carried to a safe limit as defined by researched workplace regulations.	4	2
Customer Health and Safety	Currently, the client's family must lift her and her wheelchair. This current solution has safety risks for both the client and her family including back injuries and falls.	High accident and injury potential to the client.	2	Proposed design solution increases the client's independence and allows for her to climb stairs in a manner safe to her and her companions.	4	2

Table A. 4 People Impacts in the category of Human Rights of the GPM-V5 [16]

People Impacts - Category: Human Rights						
Element	Description of the situation	Potential Impact	Initial Impact Score	Proposed Response	New Impact Score	Change
Equity, Diversity, and Inclusion	Currently, the built environment is not also designed with respect to people with disabilities to have access to all spaces, meaning that they do not have the same opportunities to participate in activities in the same way that able-bodied people do [19].	The current built environment creates unfair treatment for people with disabilities as they do not have the same access to spaces available to them.	2	Proposed design provides another option for the client to be able to navigate buildings and other places that do not have wheelchair access.	4	2

Table A. 5 Prosperity Impacts in the category of Business Agility of the GPM-V5 [16]

Prosperity Impacts - Category: Business Agility						
Element	Description of the situation	Potential Impact	Initial Impact Score	Proposed Response	New Impact Score	Change
Flexibility/ Optionality	The client has previously been aware of a few solutions and mechanism available for stair climbers, but none of them seemed feasible or convenient to her as they involved transfer from her wheelchair [9].	Client was not able to obtain a different stairclimbing solution that would change her and her family's approach on how to navigate staircases.	3	Research to increase and share awareness of potential solutions available to fit the clients requires to improve flexibility to pivot our project if it became apparent that one solution would not be feasible.	4	1

Table A. 6 Planet Impacts in the category of Consumption of the GPM-V5

Planet Impacts - Category: Consumption						
Element	Description of the situation	Potential Impact	Initial Impact Score	Proposed Response	New Impact Score	Change
Disposal (End of Life)	A change in a user's needs often will lead to technology abandonment [43] which could result in disposal of the device before it has reached the point where it is no longer fit for use.	If a mobility aid (such as a stair climber) can only accommodate the user without regarding the potential for their circumstances to change (like the type of wheelchair they use), then this would result in a negative sustainability impact as the design will be abandoned or disposed of while it is still fit for use.	2	The proposed design of the stair climber has included adjustability in its design so that it can fit a range of manual wheelchair sizes. This way, the client can continue using the device with other wheelchairs or it can potentially be useful to someone else with a different wheelchair should the client decide that she no longer needs or wants the device.	4	2

Appendix B: Part Drawings

This section contains part drawings for the manufactured parts and any part drawings sourced in part acquisition.

B.1 Frame Drawings

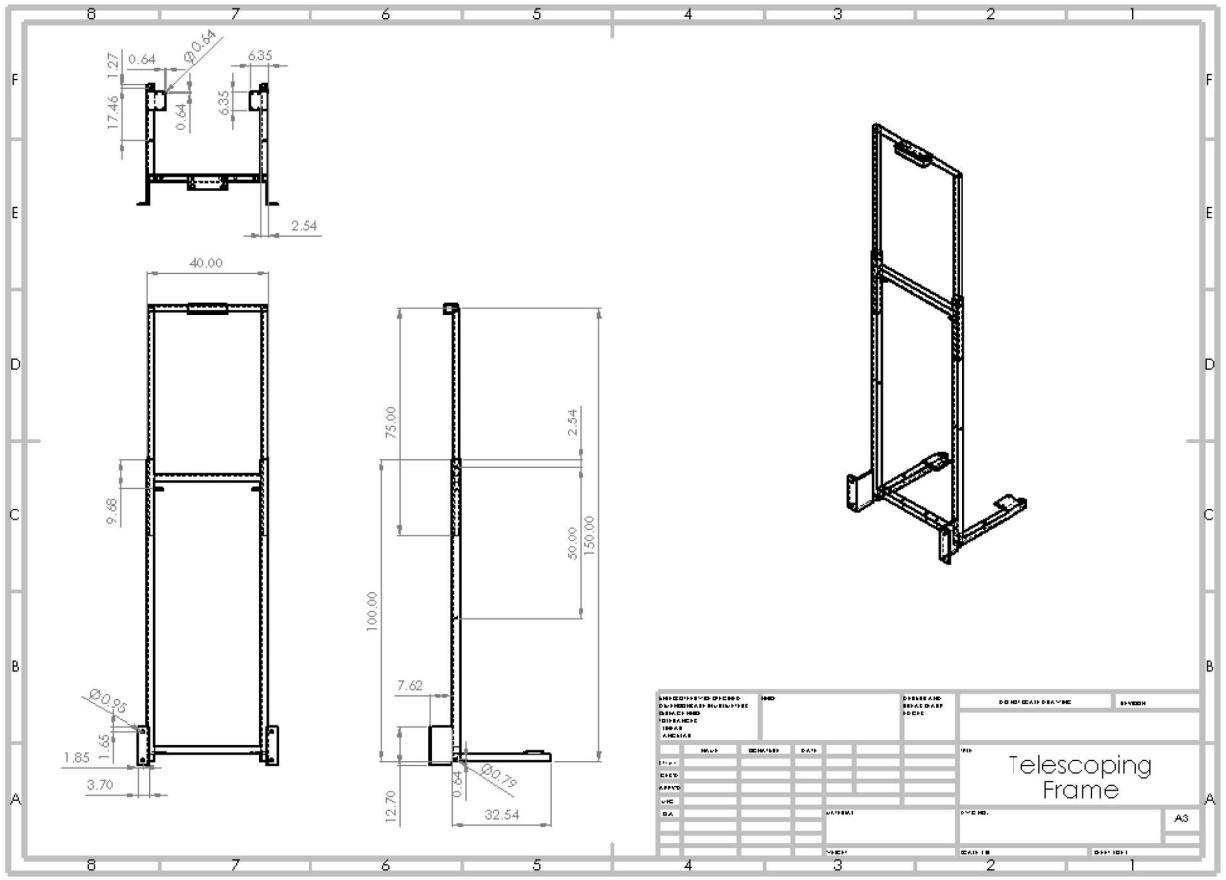

Figure B. 1. Main supporting frame of the device

B.2 Wheel Bracket Drawings

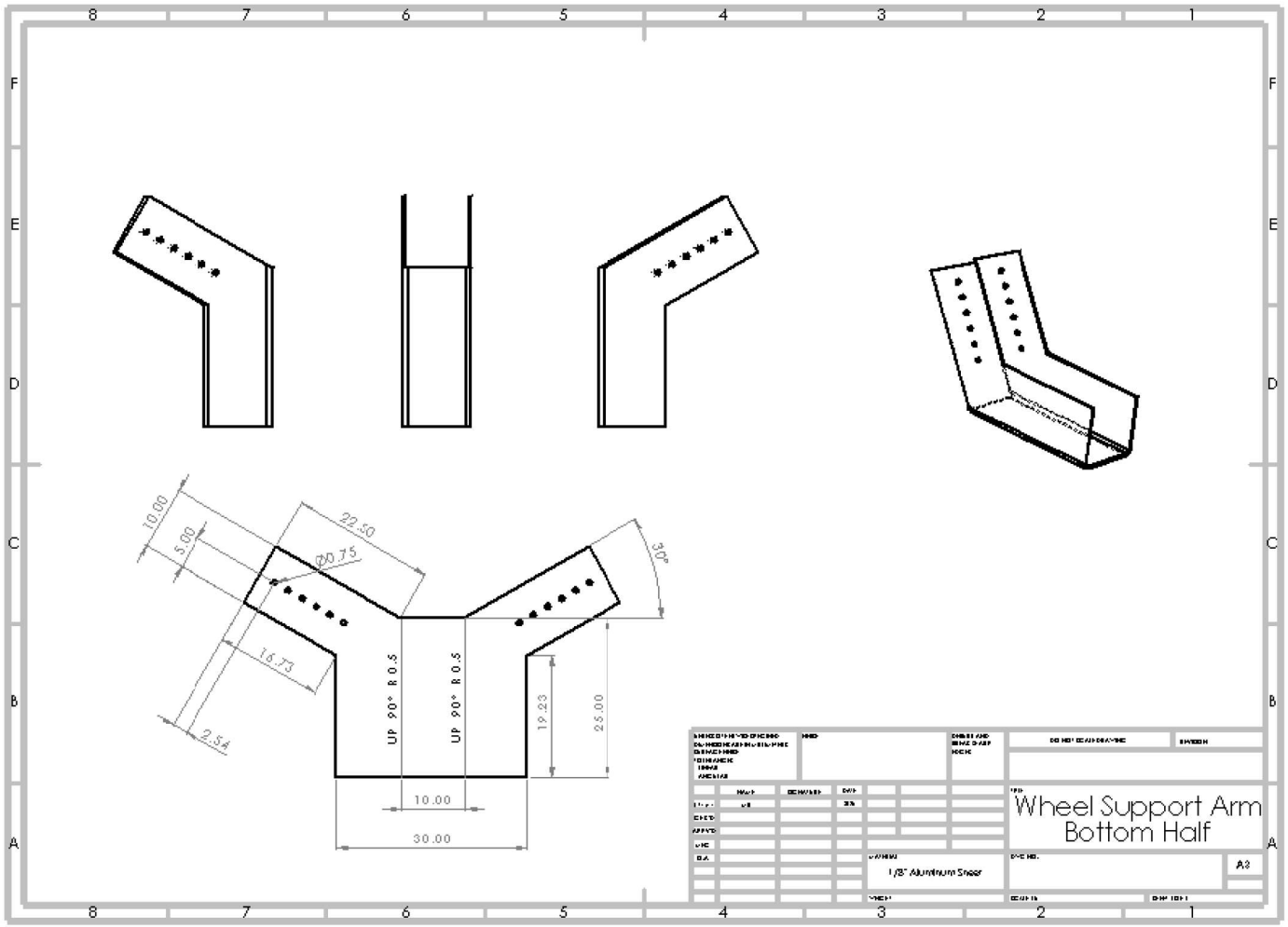

Figure B. 2. Bottom half of the wheel support arms

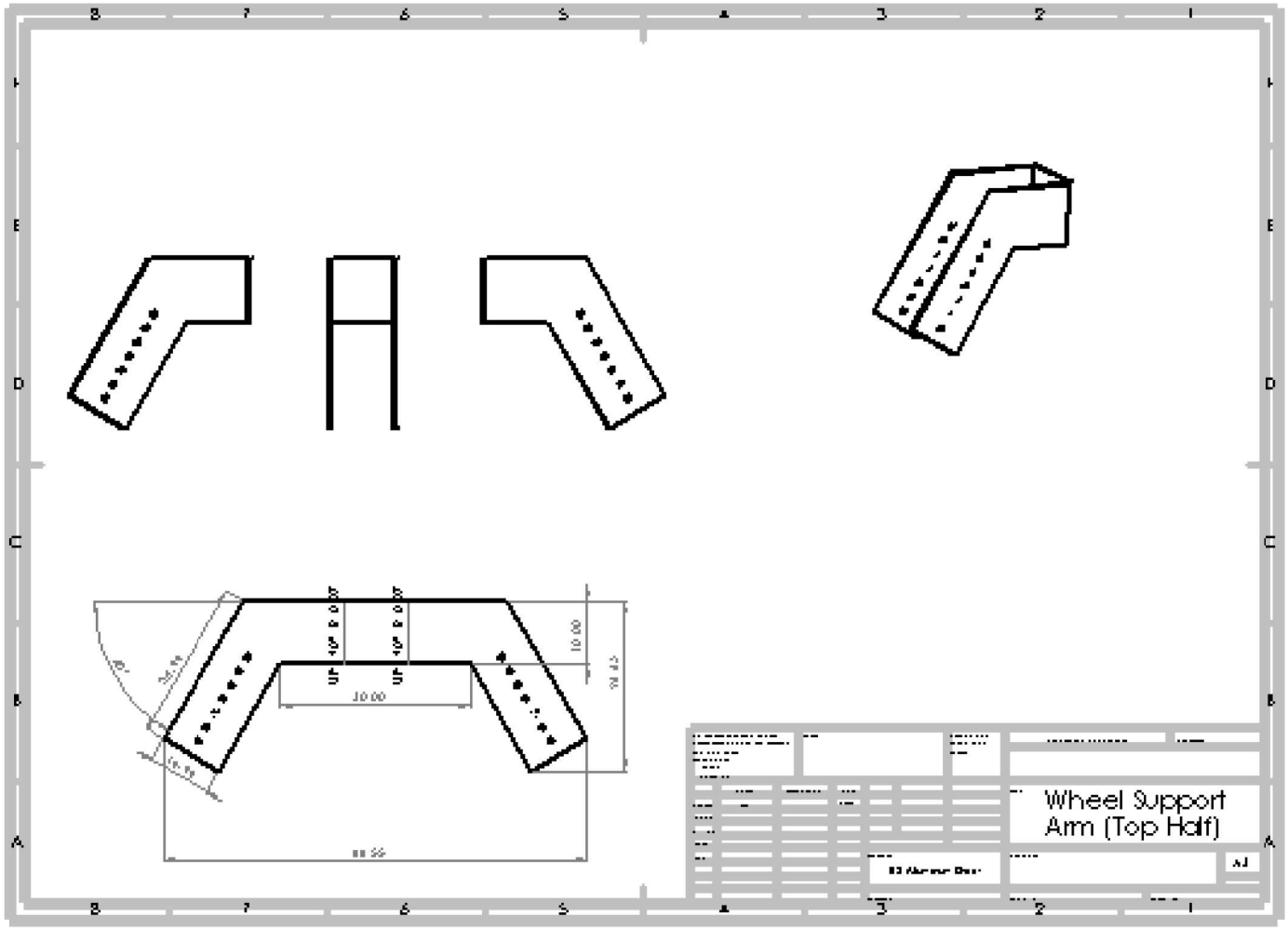

Figure B. 3. Top half of the wheel support arms

B.3 Track Profile Drawings



Figure B. 4. Inner and outer track profile dimensions

B.4 Sprocket Drawings



Figure B. 5. Custom Sprocket manufacturer drawing [32]

B.5 Track Side Guard Drawings

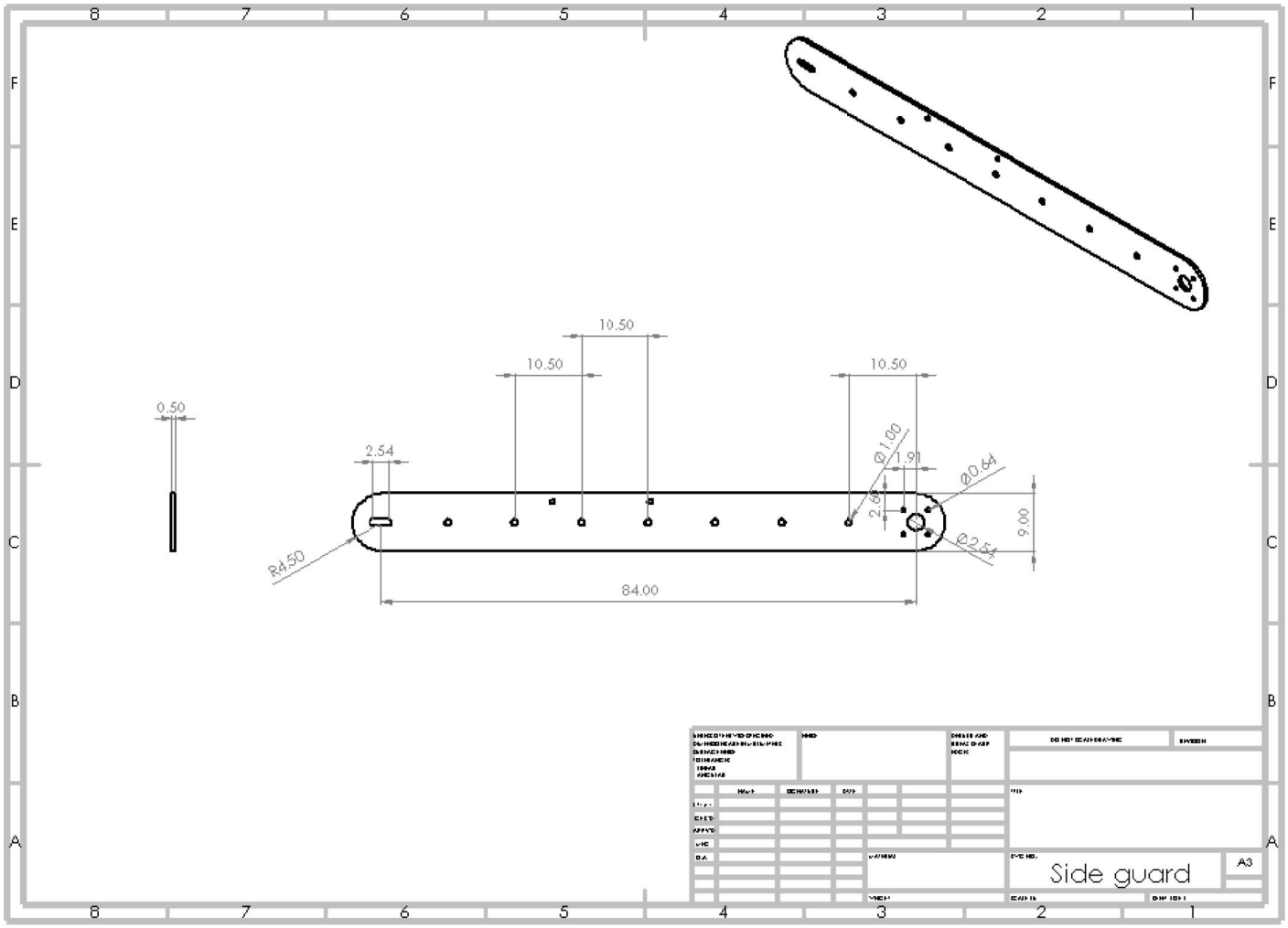

Figure B. 6. Track side guards and supports for wheel shafts

B.6 Motor-Gearbox Mounting Plate

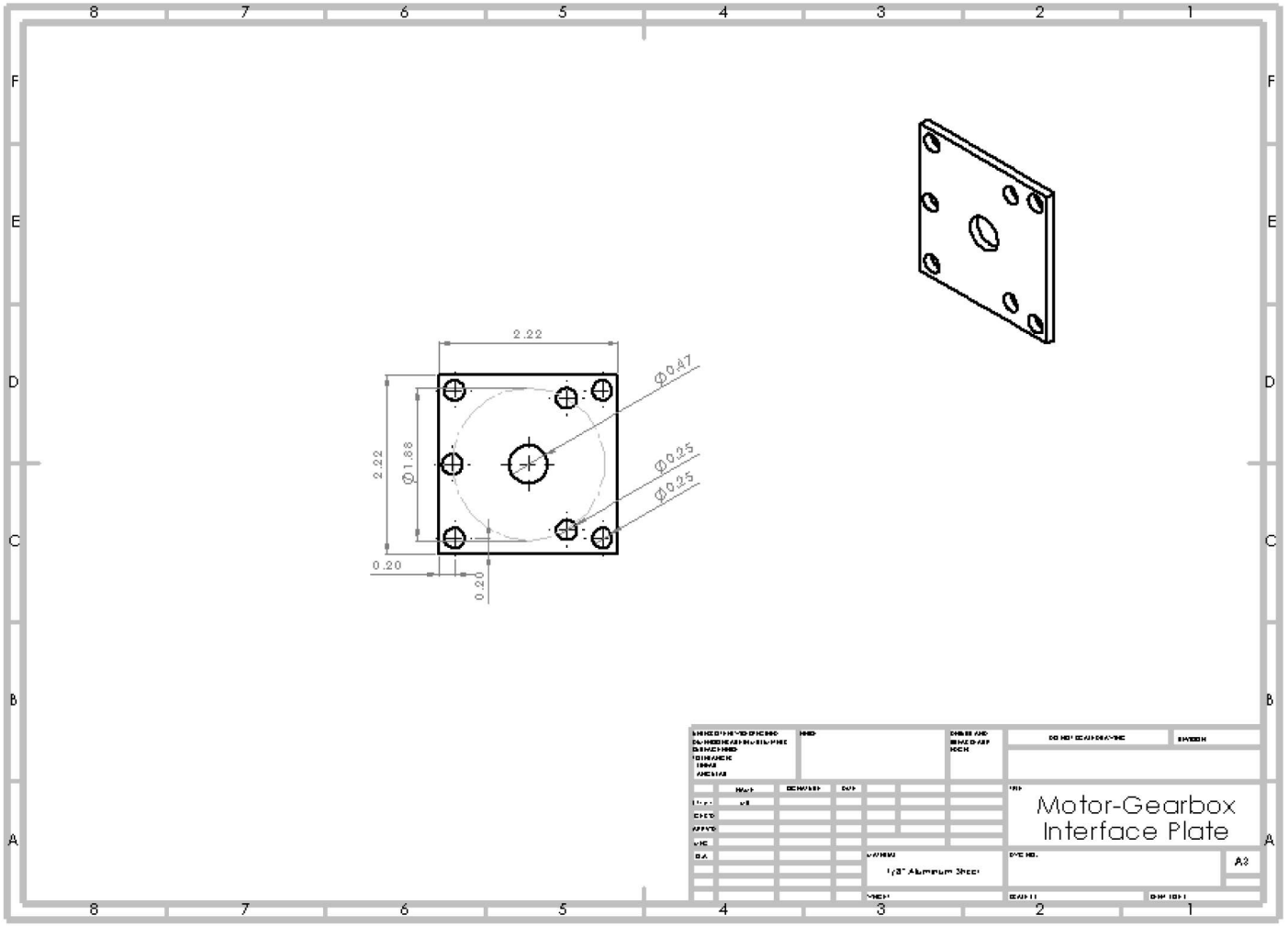

Figure B. 7. Motor-Gearbox interfacing plate

B.7 Motor Mounting Bracket

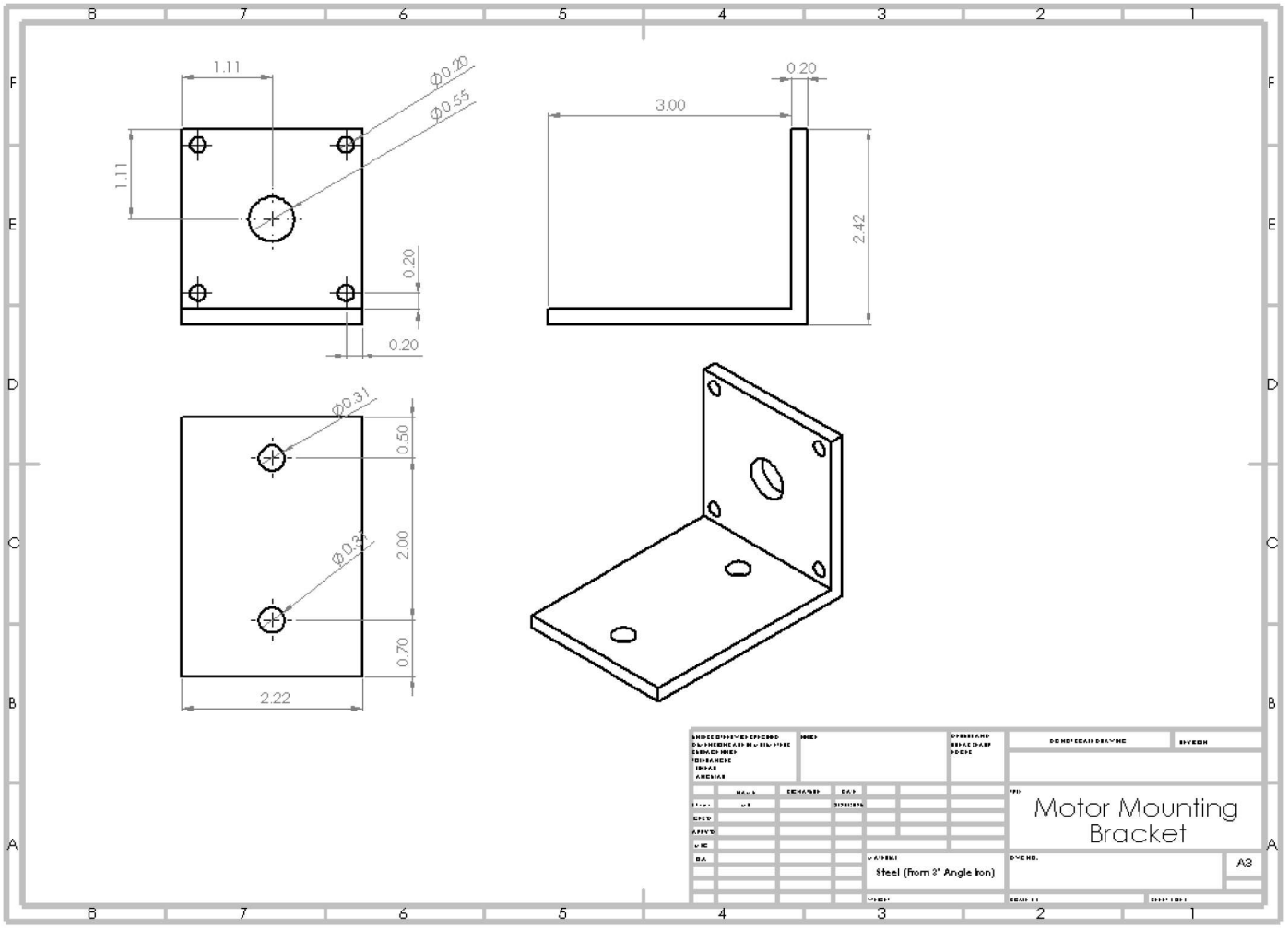

Figure B. 8. Motor mounting bracket

B.8 Track Bearing Housing

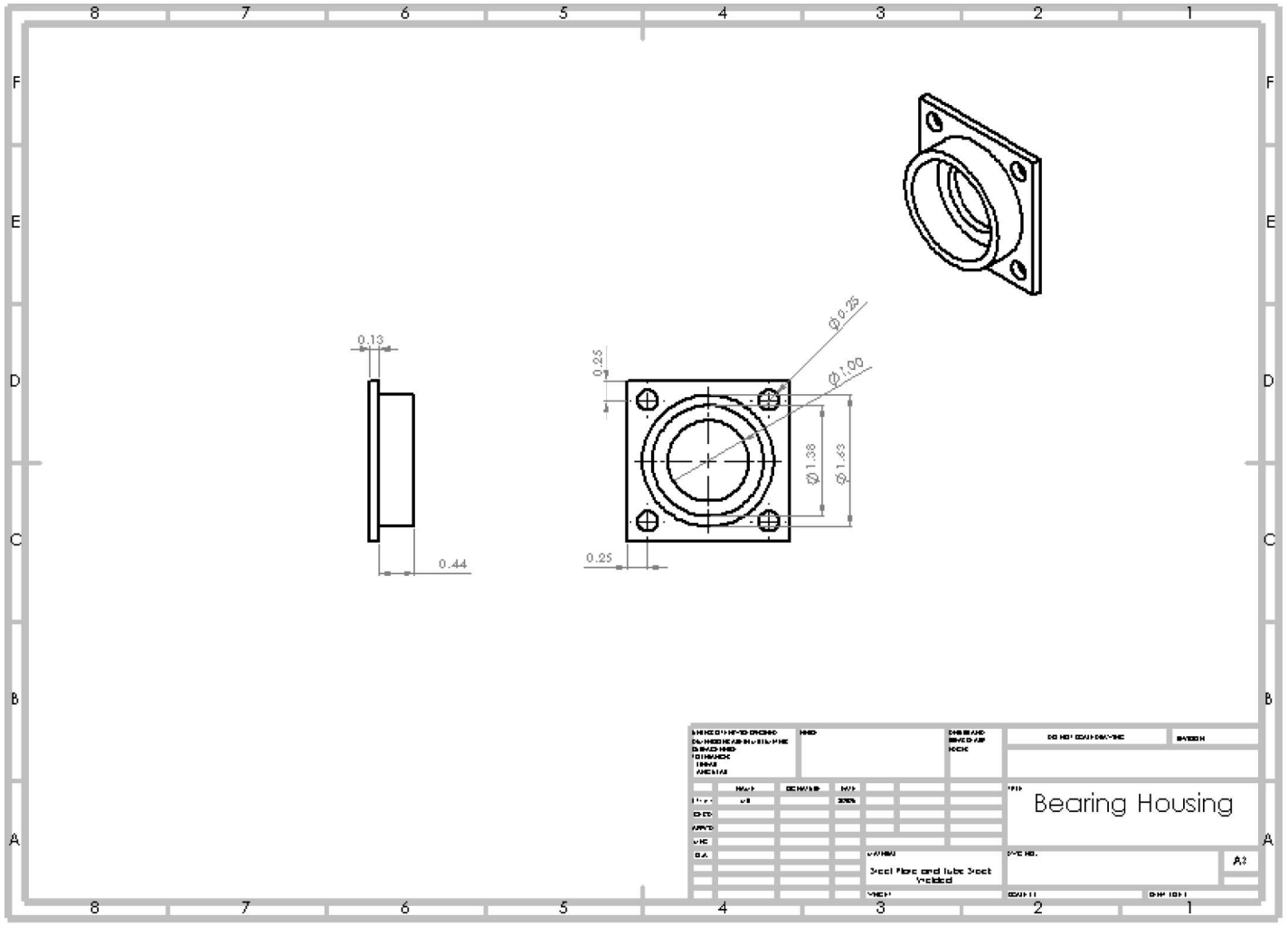

Figure B. 9. Bearing Mount Attached to the Track Side guards

B.9 Electrical Circuit Drawing

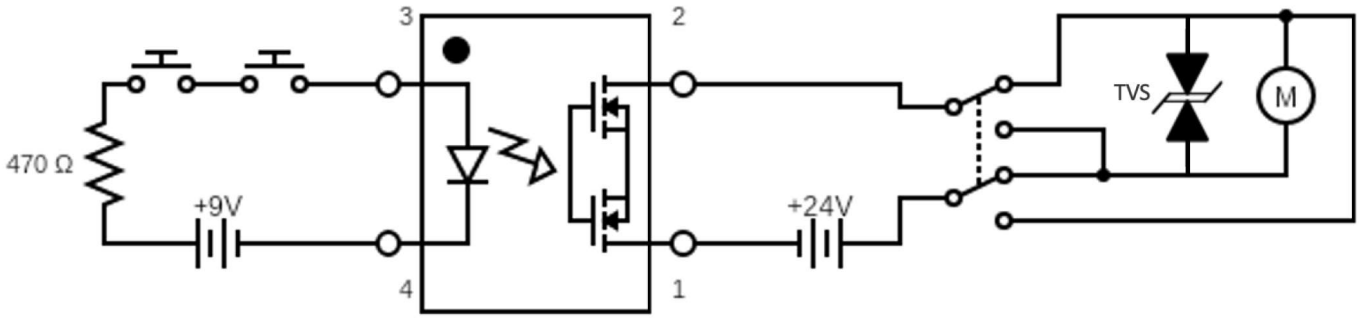

Figure B. 10. Wiring Diagram

Appendix C: Other product specifications

Appendix C includes external product specifications that we have referenced to guide our design.

C.1 Client wheelchair specifications

The below pages include size specifications for our client's current wheelchair that our team has based our design on.

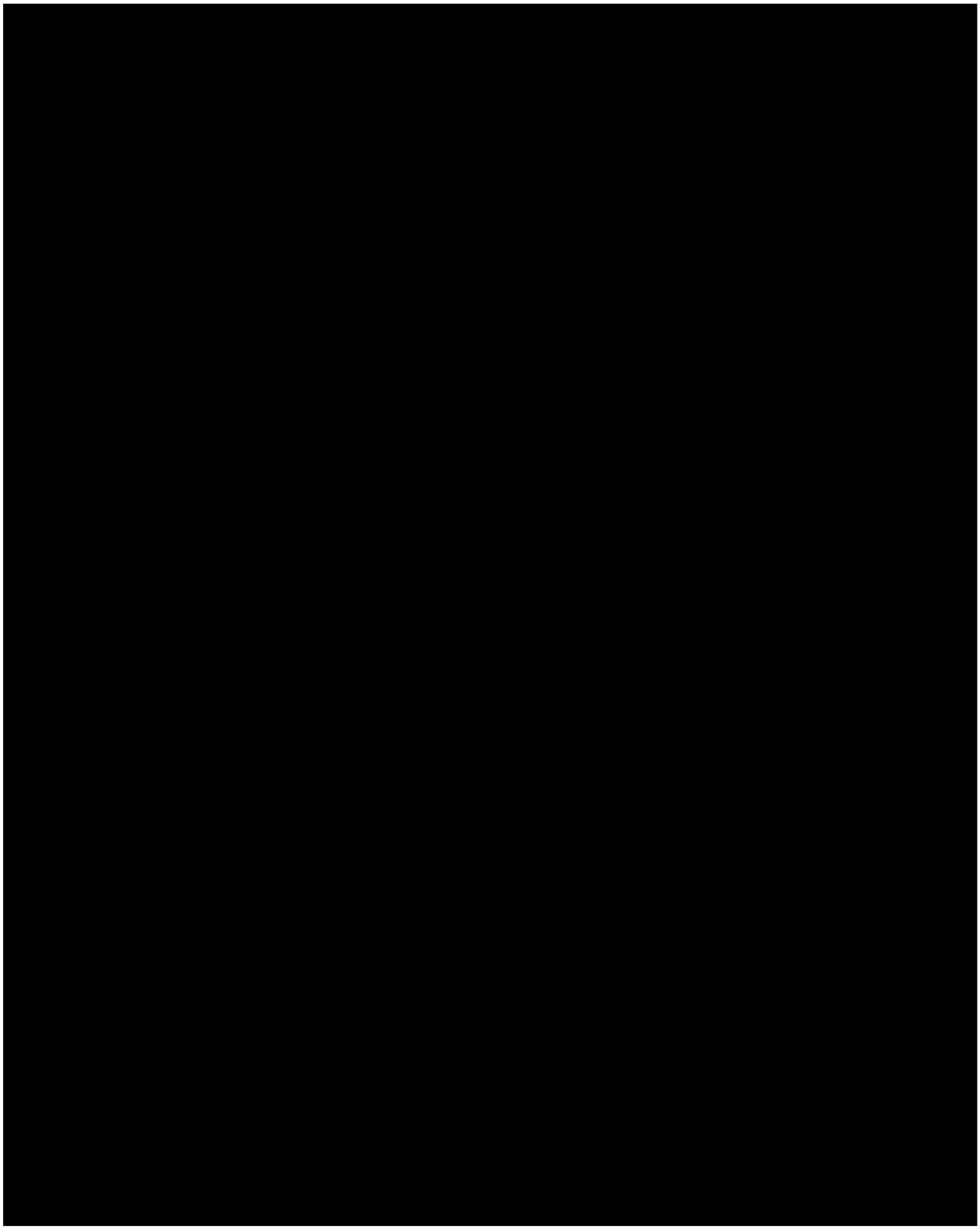

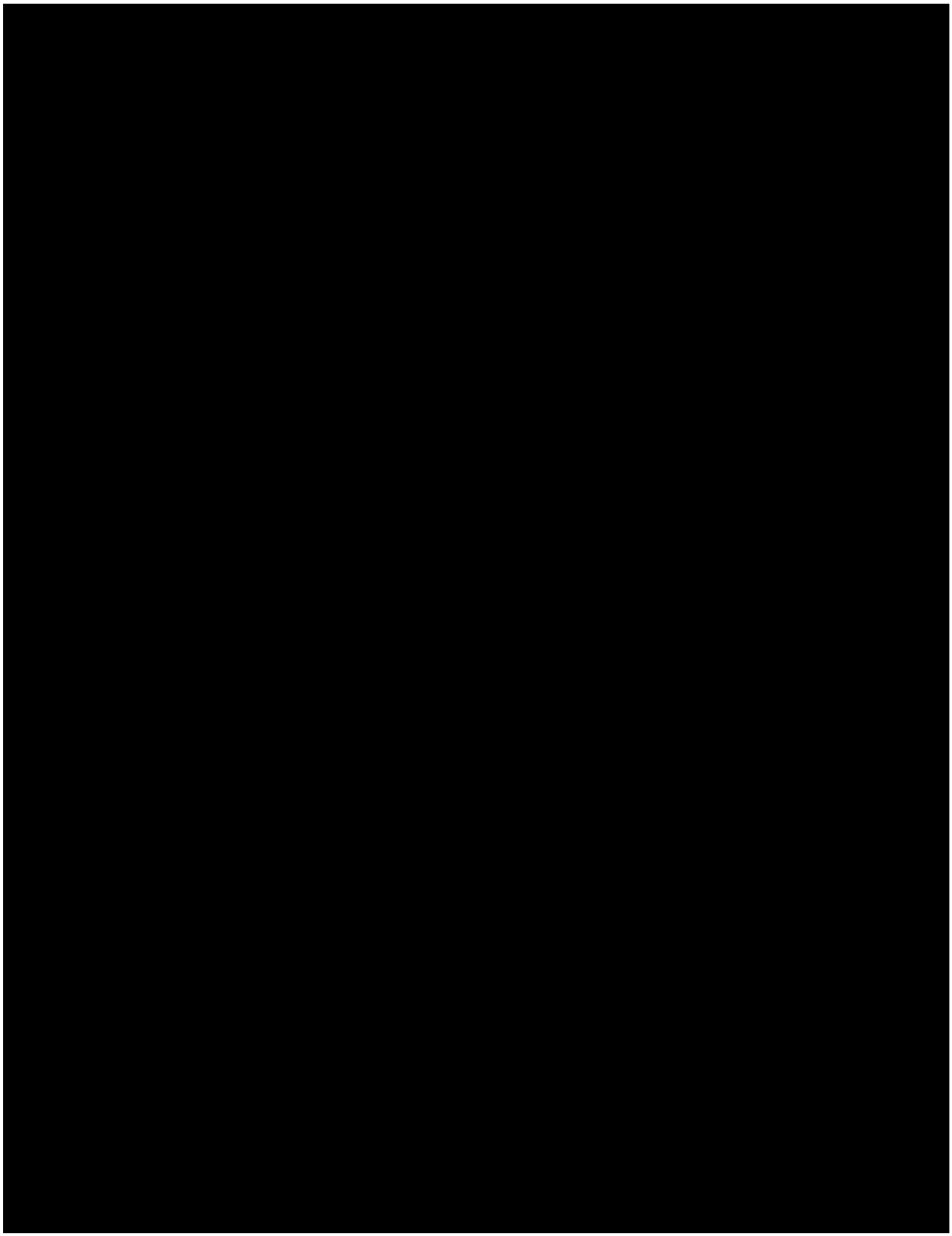

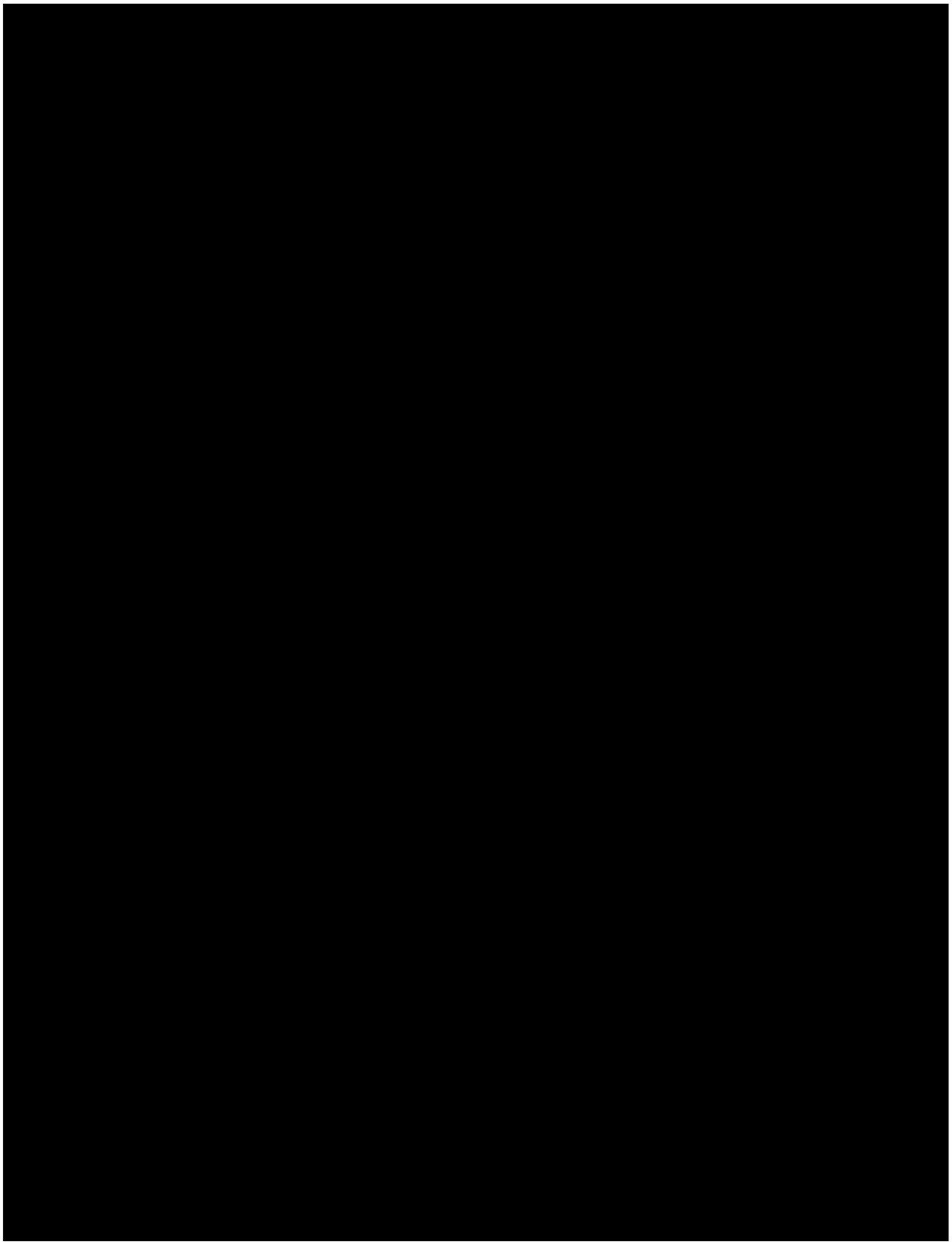

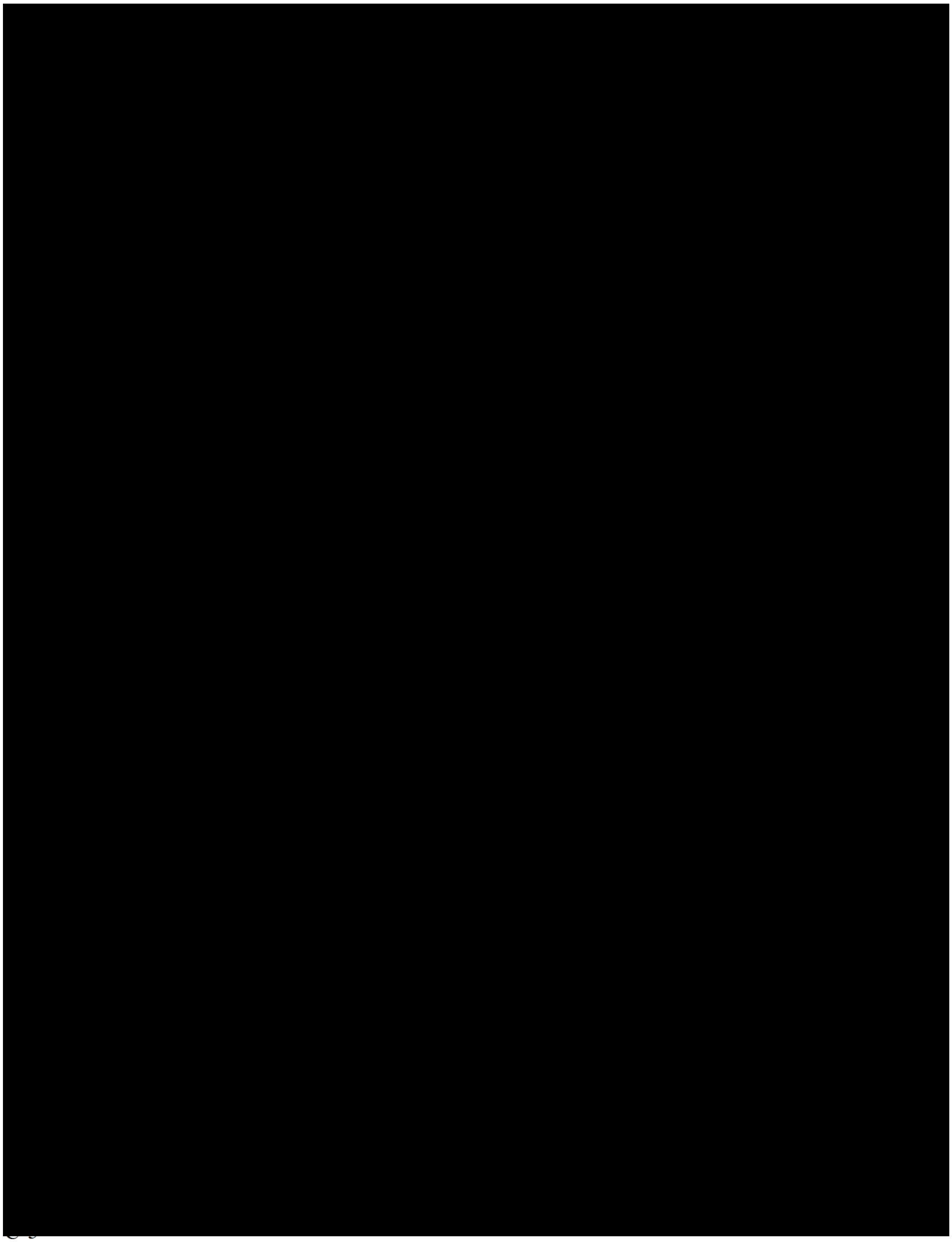

Appendix D: Calculations

The below pages include calculations necessary to verify the safety and function of the design.

D.1 Power Requirements

$$Max\ load = 90kg$$
$$Device\ weight = 23kg$$
$$Total\ load = 113\ kg$$
$$Max\ pitch\ angle = ø = tan^{-1}\left(\frac{max\ rise}{min\ run}\right) = tan^{-1}\left(\frac{200mm}{255mm}\right) \approx 40º$$
$$Wheel\ radius = 0.05m$$
$$Target\ device\ speed = 0.185m/s \pm 0.1\ m/s$$
$$\therefore 1.7rad/s < \omega < 5.7rad/s\ or\ \ 16.2rpm - 54.4rpm$$

Given an acceleration of approximately 0.2 m/s^2,

$$\sum Fx = ma = F - mgsinø$$
$$F = \frac{T}{r}$$
$$T = r * m(a + gsinø) = 0.05 * 113(0.2 + 9.81\sin(40)) = 36.8\ Nm$$

The power required would therefore between:

$$P = T\ x\ \omega$$

$$\therefore P = 62.5\ W - 210\ W$$

Our selected motor system delivers 80 W of power which is sufficient. Before gearing, the motor delivers 7.64 Nm of torque at a speed of 100 rpm. Using a gearbox to control the output speed and torque, we have selected one with a 5:1 reduction for our solution would increase the delivered torque to 38.2 Nm and the output rpm to 20 rpm which are both within our determined limits. This delivers above the necessary torque for our maximum loading conditions.

D.2 Battery Life

Assuming maximum amp draw and full charge, the selected battery is specified to run for at least 1 hour at 4Ah. Continuous use of the battery, at the given speed of 20 rpm which would equate to the device running at a linear speed of 0.105 m/s. This should allow the user to travel a distance of 377 m.

Using the maximum rise and run lengths of stairs (200 mm and 355 mm respectively [8]) allows us to determine the length of two staircases of 10 steps each.

$$L = 20\ steps * incline\ step\ length = 20 * \sqrt{0.2^2 + 0.355^2} = 8.15\ metres$$

Doubling this to provide the length travelled by the device ascending and descending two flights of stairs gives approximately 16.30 m which shows that our battery can continue providing power for well over the target specification S8.1.

Additionally, the selected motor does not draw current at the maximum amp draw rate of 4A which could allow the battery to continue providing power to the device over the above outlined calculation. The motor would draw current at 3.33A meaning that in indoor conditions, the 4Ah battery would be depleted in 1 hours and 12 minutes.

D.3 Chain selection

From the output from the gearbox, we have up to 40 Nm of torque. The gearbox output shaft is fitted with a 20-tooth sprocket with a 40 mm pitch diameter, which means that it will deliver 40Nm/0.04m = 1000 N of pulling force across the chain. The selected chain is rated for up to 784 lbs which is above 3480 N and is well above our requirements.

D.4 Deflection Calculations

The figure below outlines deflection calculations done for the telescoping handle under maximum loading conditions. We had found that the maximum deflection that could occur would be under the allowable deflection for a combined dead and live load [44]

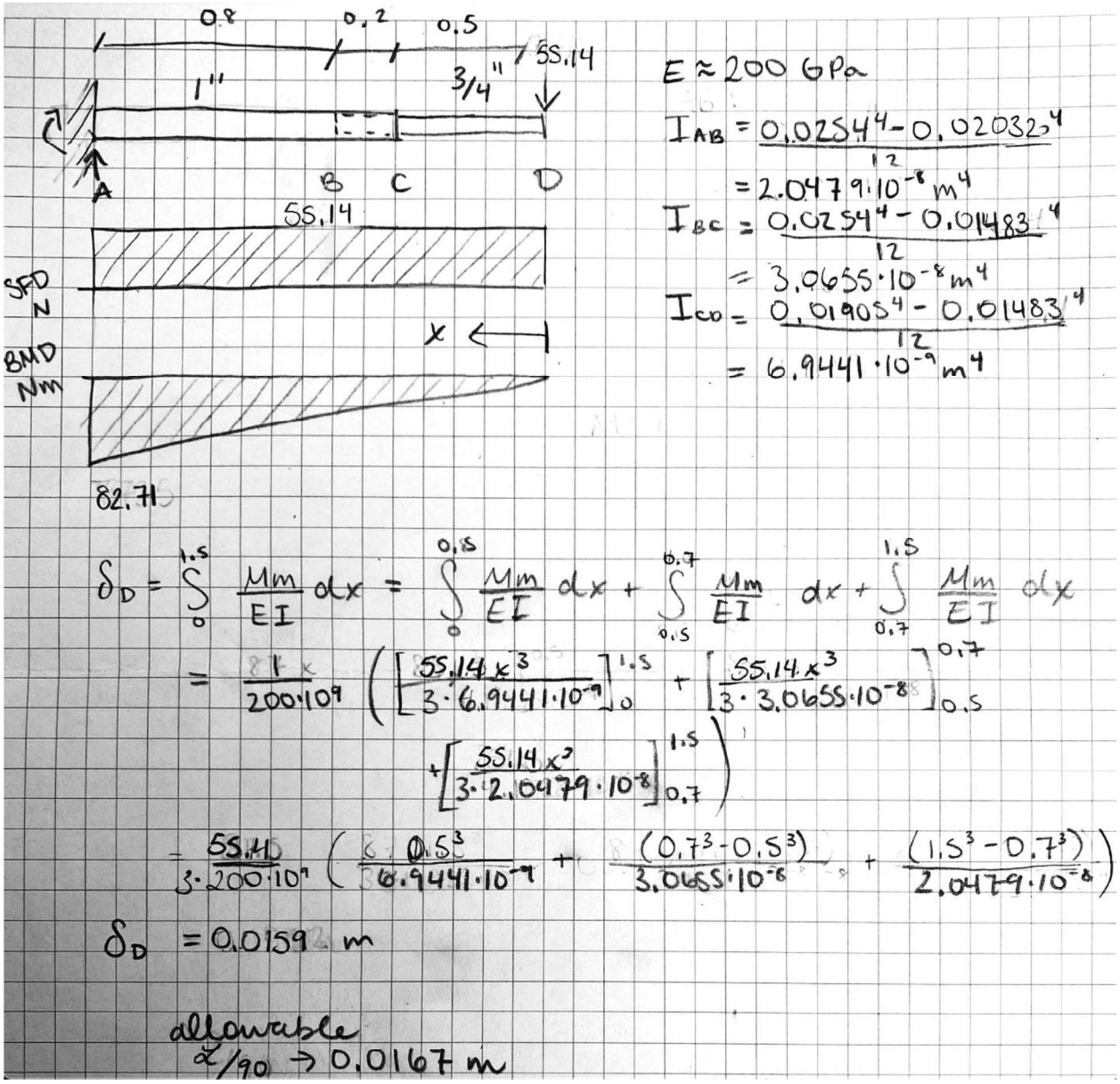

Figure B. 11. Deflection Calculations

Appendix E: Standard Operating Procedures

University of Manitoba / Tetra Society of North America	**University of Manitoba & Tetra Society**
STANDARD OPERATING PROCEDURE	Revision: 0

Document Reference Number	Revision	Date of Change	Author	Reason of Change
	0	March 17, 2025	Patricia Derksen, Joshua Ilyas	New SOP

University of Manitoba / Tetra Society of North America	**University of Manitoba & Tetra Society**
STANDARD OPERATING PROCEDURE	Revision: 0

1.0 PURPOSE

To document the procedure to handle the StepFree wheelchair lift system.

2.0 SCOPE

This procedure applies the standard use of the StepFree wheelchair lift system, including storage, set-up, operation, and maintenance.

3.0 DEFINITIONS

User: The individual who is being transported by the device.
Operator: The individual who is assisting the user and controlling the device.

4.0 DEVICE COMPONENTS

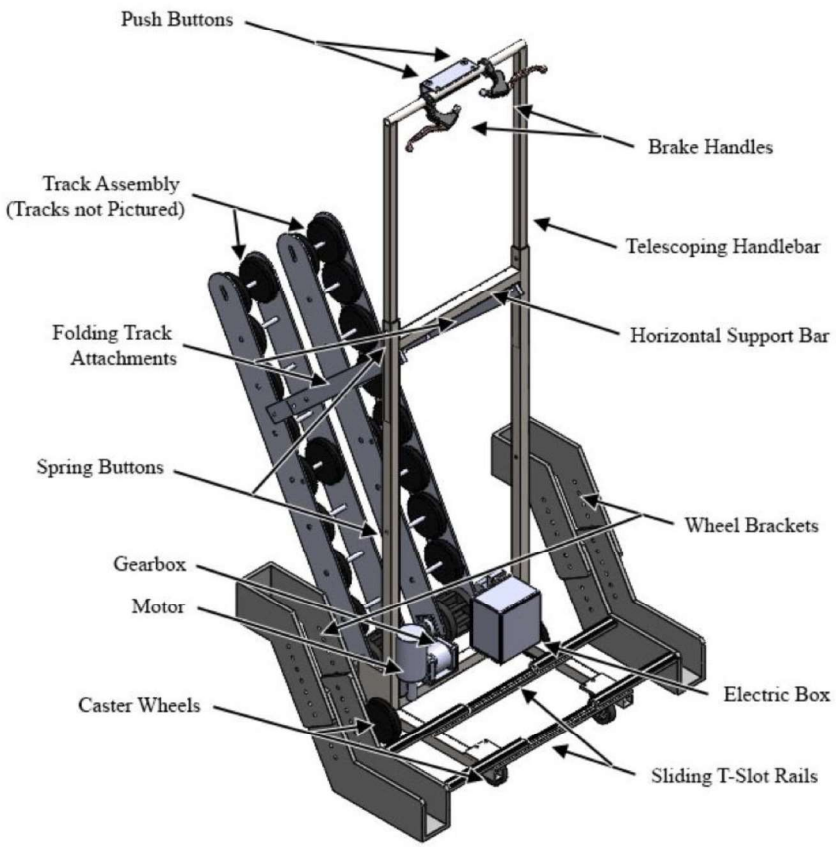

6.0 PROCEDURE

The stair climber device is intended for operation between -14°C and 25°C. Do not use the device in harsh weather conditions such as heavy rain or snow.

6.1 Storage

The device is intended to be collapsible and fit into the cargo space of most SUVs and cars. When in the collapsible position the height, length and width will be no more than 1.05 m, 1.09 m and 0.90 m respectively.

- The device should be stored in a relatively dry space to avoid any erosion or rusting that may occur if the frame is in contact with water for a long period of time.
- The main power switch found on the electrical box next to the motor should be in the off position when not in use (Figure 1).
- The battery should be removed from the connector before storage. This is done by pressing in the button at the top of the battery while sliding it upwards out of the battery connector.
- The telescoping handlebar is compacted by using the snap button aids to help depress the upper snap buttons, unlocking the telescoping portion of the frame. Once aids are properly attached, push down the device handle to secure it in the storage position.
- The wheel brackets are compacted by loosening the wingnuts on the sliding t-slot rails half a turn, then pushing the wheel brackets toward the center of the frame and tightening all wingnuts securely.
- The tracks are compacted by releasing the quick release pins in the folding track attachments, then the tracks can be pushed into an upright position and secured by fastening an adjustable strap around the frame's horizontal support bar and the inter-track bar.

6.2 Set up

- Adjust the wheel brackets by loosening the wingnuts on the sliding t-slot rails half a turn, then pulling the wheel brackets to the appropriate width which can accommodate the wheelchair and tightening all wingnuts securely.
- Use the snap button aids to help depress the lower snap buttons, unlocking the telescoping portion of the frame. Once aids are properly attached, pull up the device handle to extend the handle to its operational height.
- Prior to connecting the battery ensure that the battery connector on the electrical box is completely dry. Ensure the battery capacity is above 50% capacity (2 green lights or 3 greenlights on battery capacity indicator). Slot the battery into the connector ensuring it clicks in place.
- Flip the toggle switch on the electric box according to Figure 1 to set the motor direction.

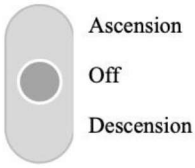

Figure 1: Toggle Switch Positions

- Attach the foam headrest to the frame, using the Velcro straps to secure it in place around the vertical frame components.
- Move the wheelchair into the frame, ensuring the wheels are securely within the wheel brackets.
- Fasten the wheelchair onto the frame using the adjustable securing straps. These straps should wrap around the wheelchair and the frame horizontal support bar as shown in Figure 2. Tighten the straps to ensure the wheelchair can't move.



Figure 2: Adjustable Securing Strap Placement

- Extend the tracks by unclipping the track securing strap.
- Insert quick release pins into the open holes of the folding track attachment, ensuring they are inserted from the inner side. These are the pins that keep the track locked in place when in operation.
- Align the device with the staircase
  - Ascending – the base of the tracks should be approximately 30 cm from the base of the stairs
  - Descending – the base of the tracks should be approximately 100 cm from the top of the stairs.

6.3 Operation

- Prior to operation familiarize yourself with the battery user manual [1].

6.3.1 Ascending

- Stand on the stairs, with your back to the stairs and facing the device.
- Tilt the device backwards so that the tracks come into contact with the stair corners.

- With both hands securely on the handlebar depress both push buttons, the motor will only run while both buttons are depressed.
- As the device begins to move upwards, move backwards up the stairs.
- At the top of staircase, maintain the angle of the device at approximately 30 degrees from the vertical, continue to run the device until it is 1 meter from the edge of the staircase.
- Gently return the device to an upright position.
- Push the tracks upright and secure them to the frame with a strap.
- Release the straps securing the wheelchair to the device.
- The user can now exit the device.

6.3.2 Descending

- Stand behind the device facing the device and staircase.
- Slowly tilt the device backwards, holding it at an angle of approximately 30 degrees from the vertical.
- With both hands securely on the handlebar depress both push buttons, the motor will only run while both buttons are depressed.
- As the device begins to move forwards and downwards, move forwards down the stairs.
- Once the device is on the stairs allow the tracks to rest on the corners of the steps
- Run the device until it reaches the bottom of the staircase.
- Gently return the device to an upright position.
- Push the tracks upright and secure them to the frame with a strap.
- Release the straps securing the wheelchair to the device.
- The user can now exit the device.

6.4 Maintenance

- Follow battery maintenance instructions provided in the battery user manual [1].

6.4.1 Every Use

- Visually inspect the device for missing, broken, or loose parts. If missing, broken, or loose parts are identified, discontinue use until repairs are made.

6.4.2 Weekly

- Wipe off any dirt from the device with a soft damp cloth and soap. Allow the device to dry fully before using.

6.4.1 Monthly

- Retighten all nuts and bolts on the device.
- Inspect for paint chipping.

7.0 REFERENCES

[1] Greenworks, "24V 5.0Ah USB Battery - BAG710," [Online]. Available: https://greenworkstools.ca/products/24v-5ah-usb-battery-bag710?srsltid=AfmBOoqgWewKkfUhbqr16IXIwRoYEGG_fzTI6MT67HA6M_N-Ruj2NwDN. [Accessed 17 October 2025].