UNIVERSITY OF MANITOBA

MECH 4860 ENGINEERING DESIGN

Final Design Report

Design of a Turbine Operating Ring Transportation Fixture

Prepared by: **Team 12 (**Hydro Maniacs)

Samuel d'Auteuil _____ Che-Chun Tao _____

Stefan Balko _____ Eromosele Asibor_____

Benedict Javate _____

Prepared for:

Client: Chris Franz, P. Eng. - Manitoba Hydro

Course Coordinator: Dr. Paul Labossiere

Project Advisor: Dr. Igor Telichev

Submission Date: December 2, 2013

Table of Contents

List of Figures iv
List of Tables v
Acronyms & Definitions vi
Standards & Codes vii
Executive Summary viii
1.0 Introduction: Problem Description 1
1.1 Project Area: Turbine Units 1
1.2 Project Problem 2
1.3 Project Objectives 3
1.4 Project Deliverables 3
2.0 Final Designs 4
2.1 Design Criteria 4
2.2 Adjustable Flap Design (AFD) 5
2.2.1 Second Version of AFD 5
2.2.2 Third Version of AFD 6
2.2.3 Finite Element Analysis for AFD 10
2.2.4 Cost Analysis of AFD 14
2.3 Pivot Base Design (PBD) 14
2.3.1 Second Version of PBD 16
2.3.2 Third Version of PBD 16
2.3.3 Cost Analysis of PBD 17
2.4 Final Converged Design 19
2.4.1 Client Feedback 20
2.4.2 Final Design 23
2.4.3 Final Design Dimensions 25
2.4.4 Stresses and Weld Sizes for Final Design 33
2.4.5 FEA of Final Design 36
2.4.6 Material Selection of Final Design 48
2.5 Risk Analysis 51
2.6 Cost Analysis of Final Design 53

2.7 Loading/Unloading Procedure 54
3.0 Conclusion 56
References 59
Appendix A: Concepts Considered A-2
Appendix B: Suppliers A-13

List of Figures

Figure 1: Powerhouse door dimensions 2
Figure 2: Original adjustable flap design (AFD) 5
Figure 3: Second version of AFD 6
Figure 4: Triangular support bars 7
Figure 5: Preliminary triangle base model propagated with supplier cross-section 7
Figure 6: Example of dimensioning for propagated base 8
Figure 7: Third version of AFD 8
Figure 8: Model of operating ring 9
Figure 9: Bottom stops added to third version of AFD 10
Figure 10: Schematic of force analysis performed on support structure 11
Figure 11: FEA on operating ring placed on support structure 12
Figure 12: FEA indicating factor of safety 13
Figure 13: Gusset added to corner of triangle supports 13
Figure 14: Original pivot base design (PBD) 15
Figure 15: Second version of PBD 16
Figure 16: Third version of PBD 17
Figure 17: Upper stop with matching threaded rod and coupling nut for final design 19
Figure 18: Adjustable flap design with mated upper stop 20
Figure 19: Redesigned flat bottom stops 21
Figure 20: Second revision of final design 22
Figure 21: FEA of flat bottom stops 22
Figure 22: Reduced size curved stops 23
Figure 23: Final design render 24
Figure 24: Dimensions of final design assembly 24
Figure 25: Exploded view of support structure 25
Figure 26: Dimensions for triangle supports (x 3) 26
Figure 27: Dimensions for rear support bars (x 4) 27
Figure 28: Dimensions for top plate (x 4) 28
Figure 29: Dimensions for bottom stops (x 3) 29
Figure 30: Dimensions for upper stop 30
Figure 31: Dimensions for coupling mounting block 31
Figure 32: Rod coupling nut used for threaded rod 32
Figure 33: Possible point of max stress in bottom stops 33
Figure 34: Bottom cross-section of the bottom stops of the ring (without fillet) 34
Figure 35: Moment acting on bottom stop 35
Figure 36: Weld geometry for calculated weld size 36
Figure 37: Meshing analysis of final design 37
Figure 38: Fixture applied to support structure 37
Figure 39: Application of gravity to the structure 38

Figure 40: Contact surface between bottom stops and operating ring 39
Figure 41: Change in bottom stop for convergence purpose 39
Figure 42: Convergence plot for normal loading FEA study 40
Figure 43: Stress distribution around the structure for normal loading 41
Figure 44: Point of highest stress in the structure for normal loading 42
Figure 45: Deformation on the structure for case 1 43
Figure 46: Loading scenario for case 2 44
Figure 47: Convergence of max Von Mises stress for case 2 44
Figure 48: Stress distribution for case 2 45
Figure 49: Regions of highest stress in the structure for case 2 46
Figure 50: Deformation on structure for case 2 47
Figure 51: Factor of safety distribution for case 2 47
Figure 52: Ashby material selection chart with material index constraint (Courtesy of Granta Design, Cambridge, UK) 49
Figure 53: Ashby material selection chart with material index and yield stress constraints (Courtesy of Granta Design, Cambridge, UK) 50
Figure 54: Tandem step deck flatbed truck 55

List of Tables

TABLE I: BREAKDOWN OF COST ANALYSIS OF ADJUSTABLE FLAP DESIGN 14
TABLE II: BREAKDOWN OF COST ANALYSIS FOR PIVOT BASE DESIGN 18
TABLE III: MINIMUM WELD SIZES FOR VARYING PLATE THICKNESS 35
TABLE IV: MAX VON MISES STRESS FOR THE CORRESPONDING ELEMENT 40
TABLE V: RISK MATRIX 52
TABLE VI: BREAKDOWN OF COST ANALYSIS OF FINAL DESIGN 54

Acronyms & Definitions

Servo-motor: A power-driven mechanism that supplements a primary control operated by a comparative force.

Wicket gate: A small gate that helps control the flow of water in a dam as water reaches the generator.

DoT (Department of Transportation): The department responsible for setting rules and regulations on transporting goods and materials.

Tie-down: A combination of securing devices that are attached to one more anchor points on a vehicle.

FEA (Finite Element Analysis): A tool that provides an accurate prediction of a structure's response to an applied load.

Stress Concentration: Localization of high stresses in a structure.

Similar Triangles: Two or more triangles that have the same angles and are proportional to each other by a certain factor.

Force Vector: A type of vector representing a force operating in a defined direction and magnitude.

Standards & Codes

Our project requires us to adhere to guidelines set by the Department of Transportation (DoT) and the Highway Traffic Act in our design, if applicable. The guidelines relevant to our project are as follows.

Department of Transportation [1]

- Tie downs and support structure must be able to withstand a force of 0.8Gs in the forward direction and 0.5Gs in every other direction.
- The support structure must have two tie downs spread over the first 3.04 m of the structure, followed by one tie down for every 3.04 m that follows.
- The tie downs must be able to be adjustable by the driver of the truck.

Highway Traffic Act [2]

- No vehicle may exceed a height of 4.15 m (13.6 ft).
- An over width permit must be obtained for any vehicle that has a width, including its load, of at least 2.6 m (8.53 ft). [3]
- If the cargo extends past the edge of the truck bed, the cargo securement system used must provide a minimum downward force of 20% of the weight of the cargo.

Executive Summary

Manitoba Hydro has requested our team, the Hydro Maniacs, design a support structure for the operating ring of turbine unit #4 at the Great Falls generating station. Our design must ensure that the operating ring maintains its shape during the entire loading/unloading/transportation process. Our client also has asked to document a simple loading and unloading procedure to be followed.

Our design structure supports the ring at a 53.9 degree angle such that the ring can bypass the dimensional restriction of the powerhouse door and be carried out of the facility by a flatbed truck. The final design consists of a base of three triangular supports connected by four square bars, four plates and four stops, all of which are made of AISI 1050 annealed steel. Adjacent sides of the triangles are the main contact area to the ground. Each triangle is joined by welding a square bar at the end points of opposite side to the next triangle. Two plates are welded to the end points of the hypotenuse sides to provide contact area for the operating ring. Three stops which are made based on the curvature of the ring, are implemented on the bottom plate to hold the ring fixed. An upper stop is installed on the middle triangle to ensure the ring's inner diameter maintains its form during transportation.

The design structure is able to support the weight of operating ring, 12,900 lbs without any type of engineering failure. FEA analysis shows that in SolidWorks and ANSYS, we have found the maximum stress of the structure caused by the load of the ring is 114 MPa with a maximum deflection of 0.138 mm while maintaining a minimum factor of safety of 2.86.

Our design support structure delivers a solution for Manitoba Hydro to remove its operating ring out of power generation facility. In spite of the innovative features, the support structure is carefully designed to use materials and manufacturing methods to keep the costs low, with a total cost of $16,826.10. Through our complete analysis, our final chosen design meets our client's needs and project objectives.

1.0 Introduction: Problem Description

Our client, Manitoba Hydro, is an electrical power generating company based in Manitoba. Manitoba Hydro utilizes the kinetic energy of moving water to turn large turbine blades. These turbines then spin a rotor which generates electricity. The Great Falls generating station contains five of these turbine units and has a total capacity of 129 MW [4]. In order to understand the context of the operating ring, we need to discuss the turbine unit itself.

1.1 Project Area: Turbine Units

Since the operating ring is the main focus of our project, a description of what an operating ring does inside of a turbine unit is important. Each turbine unit has a component called the operating ring – a large component connected to servo-motors and wicket gates. The servo-motors are used to rotate the operating ring to varying positions. As the operating ring rotates, the wicket gates it is connected to open or close (depending on the direction of rotation) and the flow rate of water into the turbine changes. Being able to control the flow rate of water into the turbine allows the operators to control how much energy is being output by the station.

Since the ring is rotating and is connected to moving joints, it is exposed to multiple unfavourable conditions. These conditions, among others, include cyclic loading due to the rotation of the ring, corrosion from the friction against the connecting joints and fouling from lubricants and rust. It is because of these unfavourable conditions that the ring must be sent for refurbishment during the life cycle of the turbine.

These conditions, among other factors, wear on the operating ring at turbine unit # 4 at the Great Falls generating station. The operating ring now needs to be refurbished. Unfortunately, there is no refurbishment centre on site at Great Falls. This means that the operating ring must be sent off site to be refurbished.

1.2 Project Problem

As outlined in section 1.1, a general overview of our project states that we must transport an operating ring out of the Great Falls generating station to be refurbished. The basic problem of our project suggests a simple transportation procedure, the real problem lies in the method of how the operating ring will be supported and moved out of the powerhouse. Figure 1 illustrates that the operating ring is wider than the width of the door. The operating ring is 13'-11.25" ft in diameter, while the only available door able to transport the operating ring out of the powerhouse is about 11'-10.5" in width. Therefore, the operating ring must be fixed at an angle in order to be able to fit through the powerhouse door, which adds another level of difficulty to our project.

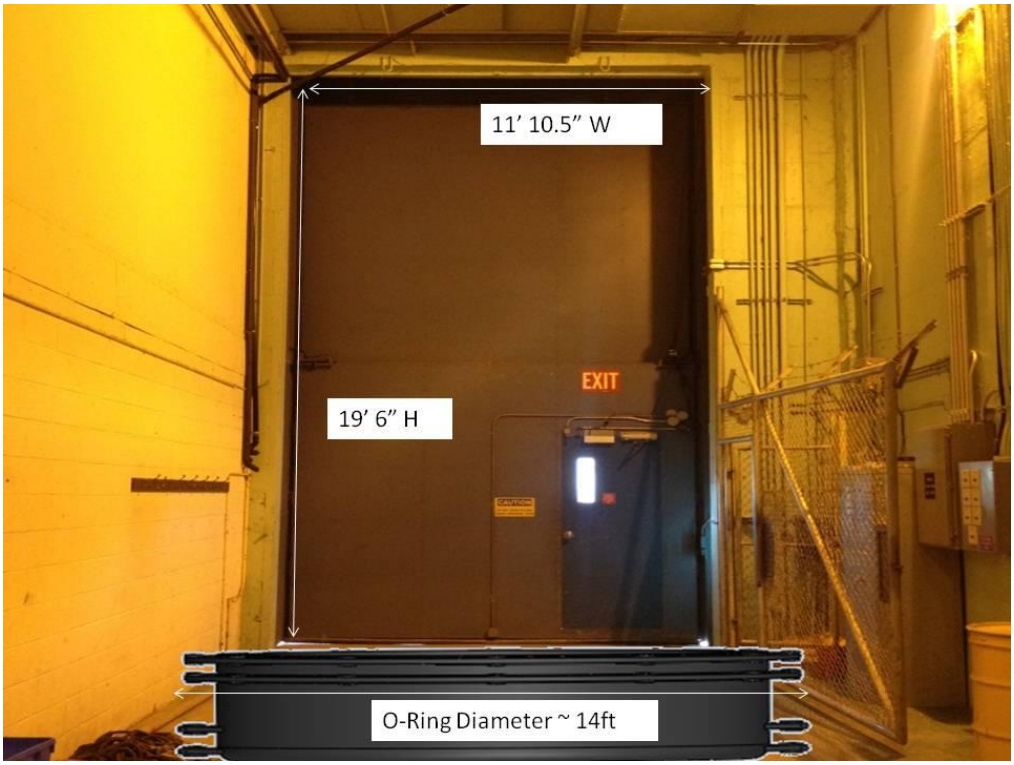

Figure 1: Powerhouse door dimensions

A support structure must then be built in order to allow the operating ring to be fixed at an allowable angle. Since the operating ring must be fixed at angle, a stress analysis on the support structure/operating ring apparatus becomes more difficult. Fixing the operating ring

at an angle to fit through the powerhouse door while ensuring our structure can safely support the operating ring is the main focus of our project.

1.3 Project Objectives

The following is a list of the objectives our group has compiled with the help of our client.

- Fit the operating ring through the powerhouse door
- Create a loading and unloading procedure to load the operating ring onto a flatbed truck
- Design the support structure at a low cost
- Design a support structure with a minimum safety factor of 2

1.4 Project Deliverables

A list of deliverables necessary to complete our project is as follows.

- Create a support structure that will:
    - Fix the operating ring at an angle that will allow the ring to fit through the powerhouse door;
    - Maintain safe stresses while the operating ring is loaded onto the support structure
    - Maintain the operating ring's shape
- Follow a documented procedure that outlines the steps necessary to load and unload the operating ring onto the flatbed truck.

2.0 Final Designs

Five initial designs were created – these five designs were then evaluated through scoring and weighting matrices based on five design criteria established by our team. The complete design evaluation process used by our team are highlighted in Appendix A.

2.1 Design Criteria

When coming up with possible designs, our team came up with five design criteria that our designs must adhere to in order to successfully satisfy our client's needs. The five criteria our team established are as follows.

1) **Cost**: Includes labor, materials, truck rental, assembly, etc.
2) **Ease of Loading**: Degree of difficulty of loading/unloading scenarios, which may include, but are not limited to, loading of operating ring onto support structure, and support structure onto flatbed truck.
3) **Manufacturability**: Complexity of building the support structure and any necessary components.
4) **Ease of Handling**: Includes factors such as size, weight, and shape of support structure.
5) **Adjustability**: The ability for the support structure to adjust its components (e.g. clamps, pulleys, magnets, etc.) to adapt to the operating ring.

The two designs our team chose satisfied the last four design criteria on the list. Cost analysis was difficult to determine, as we could not give a definitive cost estimate without modeling and analyzing the two designs first. To narrow down the remaining two designs, the strategy decided by our team was to take the two designs that we had previously converged to, model them, and perform an analysis to determine which would cost less. The design which cost less would ultimately be the design chosen to recommend to the customer.

The two designs our team chose are the adjustable flap design (AFD) and the pivot base design (PBD). Full details of these two preliminary designs are in Appendix A. As each design went through a comprehensive analysis, these designs went through several changes. The iterative processes and detailed analysis for each design are presented in sections 2.2 and 2.3.

2.2 Adjustable Flap Design (AFD)

The adjustable flap design (AFD) was the simpler of the two competing designs. We initially were going to use flaps to clamp down the operating ring. This became difficult to implement, and would probably end up adding unnecessary cost to the design. The design is shown in Figure 2.

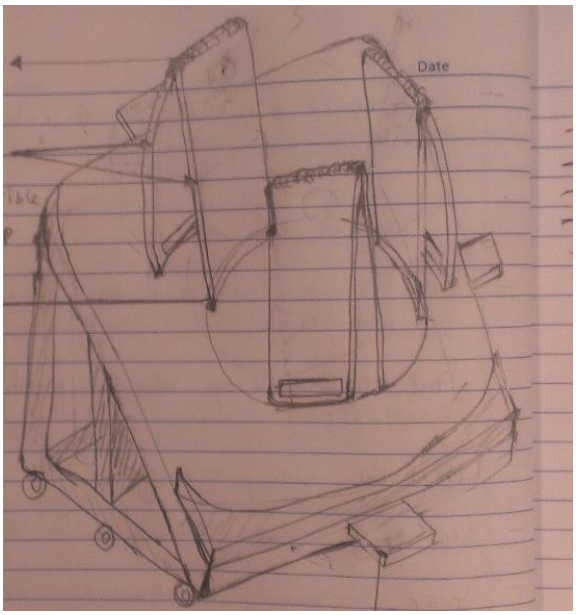

Figure 2: Original adjustable flap design (AFD)

Several modifications were then made to the AFD to reduce the unnecessary complexity and extra costs associated with the initial proposed design. The modifications are outlined in sections 2.2.1 and 2.2.2.

2.2.1 Second Version of AFD

The flaps were scrapped in favour of using stops and straps or chains to ensure that the operating ring stayed fixed to the support structure. This alteration was easier to visualize and to model, as well as simplifying the design to reduce cost in the end. The bed and bottom stop of the adjustable flap design were kept and split into three separate stops as they were simple and performed the necessary functions without over-complication. The wheels were scrapped as well, as the design does not need to be able to move and having them

would just add instability and more possible failure points to our design. The resulting design we came up with after removing these pieces is shown in Figure 3.

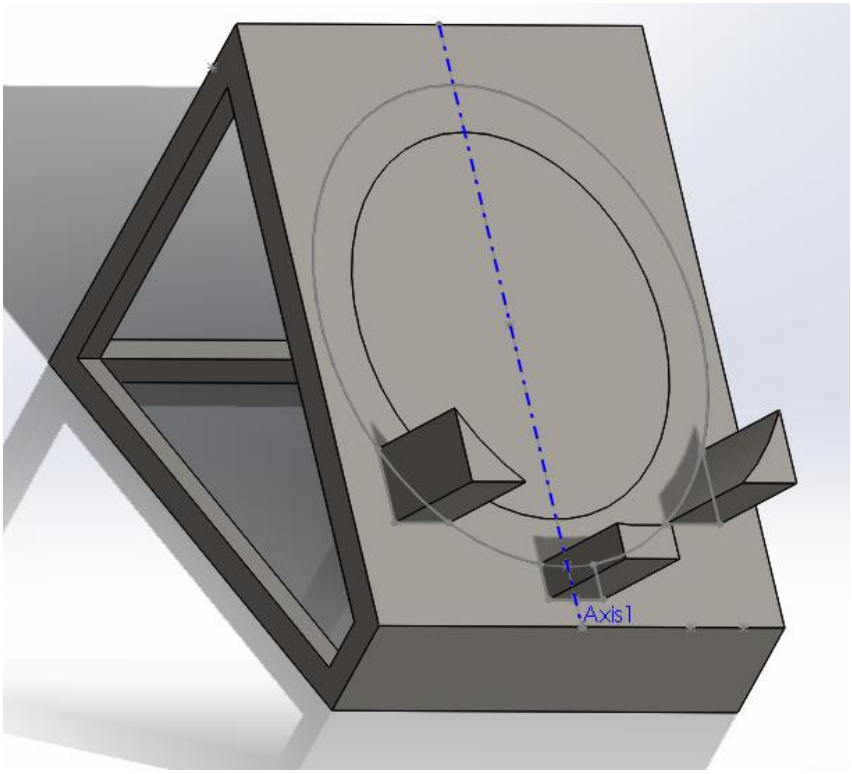

Figure 3: Second version of AFD

However, after creating this next design, we realized that manufacturing this design would be very difficult, as most of the pieces were very large and would have to be custom purchased, which would yet add more cost to the design. It was at this point that we decided to look up some different manufacturers to get a good idea of the type of suppliers that were available, and what kinds of beam shapes and plates they were able to supply. By researching the types of beam shapes and plates typical contractors supply, we can then form a design that uses ready-made supplies for easy manufacturability and low cost.

2.2.2 Third Version of AFD

We then started to make different components of each piece of the design. We also altered the design at the same time to simplify manufacturing as well as reducing possible failure points (like the vertical portion at the bottom of the design). We made sure that these

components could be purchased from a supplier, or easily manufactured in house. Initially, forming the triangular supports at the back of the design proved difficult. Cutting each bar to exactly match up at the angles we wanted was difficult, and as we later found out, unnecessary. The bars looked something like what is shown in Figure 4.

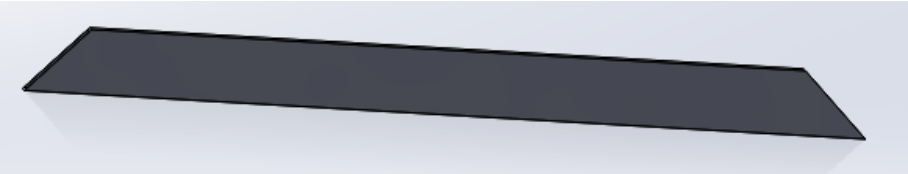

Figure 4: Triangular support bars

As these bars were easy to manufacture, we saw value in maintaining this type of design philosophy. However, these bars proved very difficult to model. We then learned of a feature in the design program that allowed us to propagate a cross-section along a selected profile. We were able to use this feature to propagate one of the cross-sections found from the supplier around our design shape. The result is shown in Figure 5.

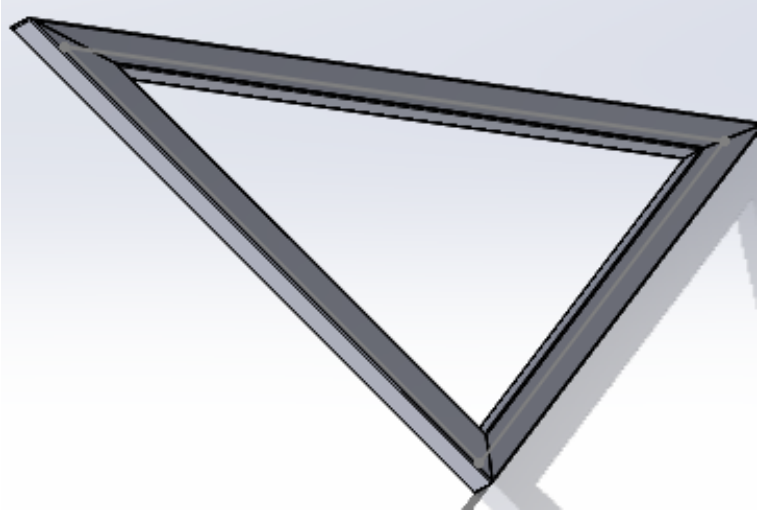

Figure 5: Preliminary triangle base model propagated with supplier cross-section

This feature maintains geometry that is easy to dimension and read, so as to reduce the difficulty of actually manufacturing the support structure. An example of this is further shown in Figure 6.

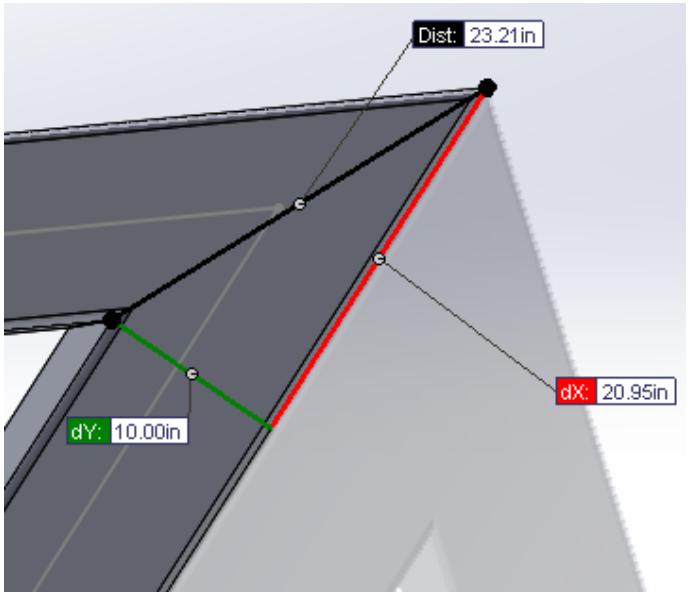

Figure 6: Example of dimensioning for propagated base

From here we were able to start assembling the altered design. Using three of the triangles shown in Figure 5, four square bars and six plates, we assembled the next version of the design. This version features manufacturability, as mentioned above, as well as a lower weight than the original, plus less stress concentrations and possible failure points. The design is shown in Figure 7.

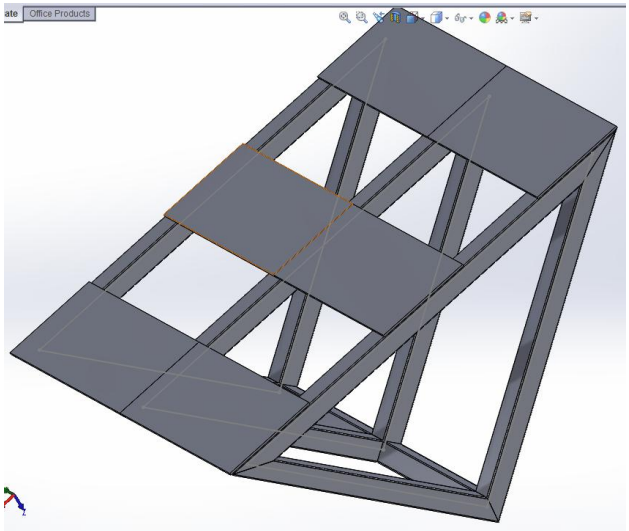

Figure 7: Third version of AFD

The next step was to add a model of the actual operating ring into the assembly, to see how the fit up was aligned. The dimensions for the design were taken from the drawings supplied by the client and the support structure was designed to be able to contain the entire ring, with a little bit of excess room at any point along on the bed, just to be safe. The excess space will be removed once we can determine where we want the operating ring to sit on the bed, as well as the distances required for the whole assembly to fit through the power house door (11'– 10.5"). The model we made of the operating ring is shown in Figure 8.



Figure 8: Model of operating ring

Once we introduced the ring onto the assembly, we realized that we had to shift some of the bed plates around, to ensure that we could get the most surface area of the operating ring supported as possible. We also noticed that at some points, the bed was larger than we expected to be, so some size reductions took place.

We also had to re-dimension the stops to ensure the stops had the correct curvature to actually hold the ring on the assembly and not just let the ring slide off. These stops were made each as their own piece, based on the curvature of the ring at that location (such that the ring is in constant contact at each point of each stop) and added to the assembly. The result is shown in Figure 9.

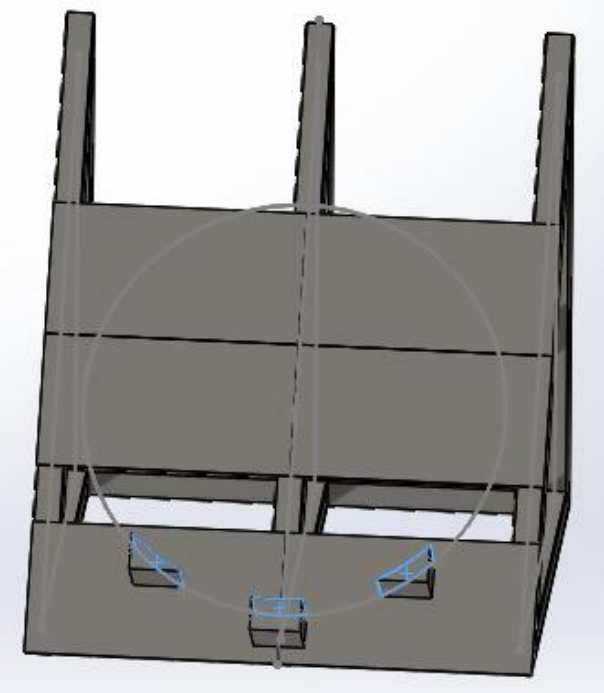

Figure 9: Bottom stops added to third version of AFD

2.2.3 Finite Element Analysis for AFD

After creating the preliminary support structure, we decided to perform some preliminary analysis, to see how the design held up when actually loaded. Since most of the modelling was done in SolidWorks, coupled with the fact that this was simply a preliminary analysis, we decided to perform a finite element analysis (FEA) in SolidWorks. The analysis was attempted by actually fitting the ring onto the assembly and letting the program run, however the meshing of the ring with the assembly failed in multiple areas between the ring and the structure. The mesh size was refined in these areas, as well as changing the mesh type to a curvature based mesh, for accuracy, and still the operating ring would not mesh with the support structure. To resolve this problem, we performed a mathematical analysis. Since we know that the angle of tilt for the support structure based on the triangles, we are able to break the gravity force up into components along the x-direction (parallel with the bed surface) and the z-direction (normal to the bed surface). The angle θ is calculated from the dimensions on the model and is not necessarily final yet. A schematic of this analysis is shown in Figure 10.

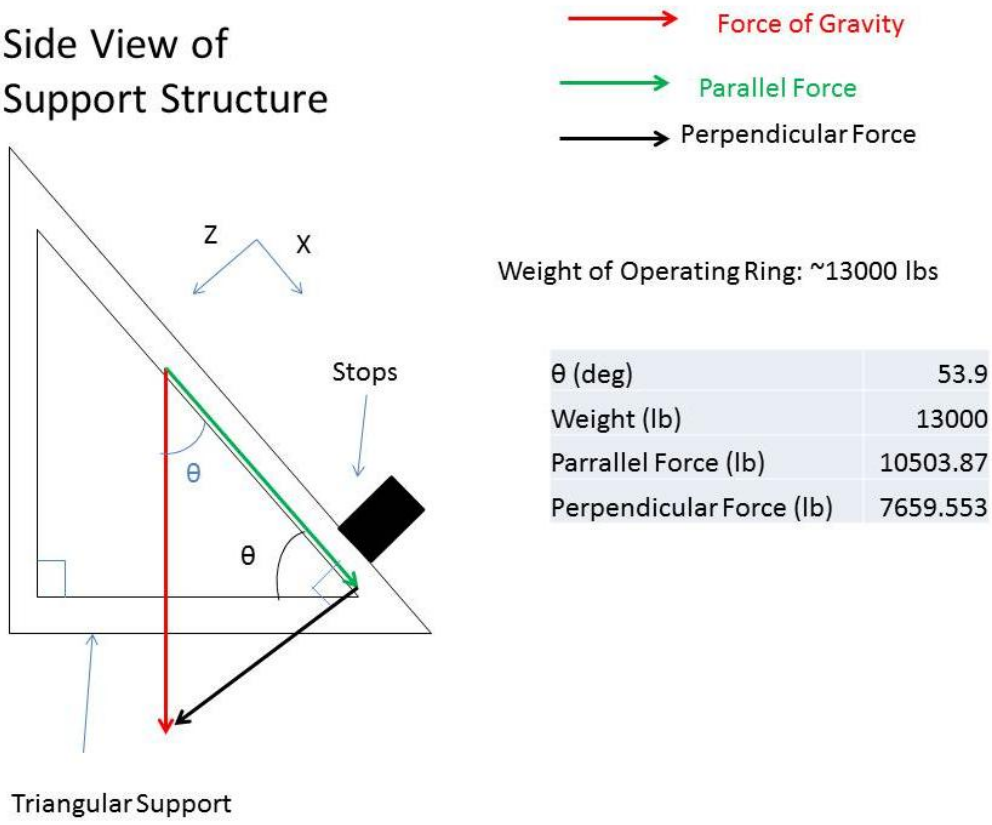

Figure 10: Schematic of force analysis performed on support structure

The angle to determine the parallel and perpendicular forces is known, due to the similar triangles relation between the incline and the force vectors. These numbers were used as a substitute for the operating ring's weight. The parallel force was used as a shear force on the bed and a normal force on the stops. The perpendicular force was used as a normal force on the bed itself. With this forces now calculated, we were able to simulate the loading of the support structure using the FEA feature in SolidWorks. In this simulation, gravity was included to ensure that the weight of the support structure itself was accounted for. The structure was fixed by adding fixed supports to the lower bars of the triangles and connecting bars. We note that because we have sharp corners in this design, we expect there to be "infinite" or large stresses at the locations of the corners, as well as some attachment points of the different members of the assembly. A material was assumed based on available materials from the suppliers that we found were able to make the components we needed. The stress results of the FEA are shown in Figure 11.

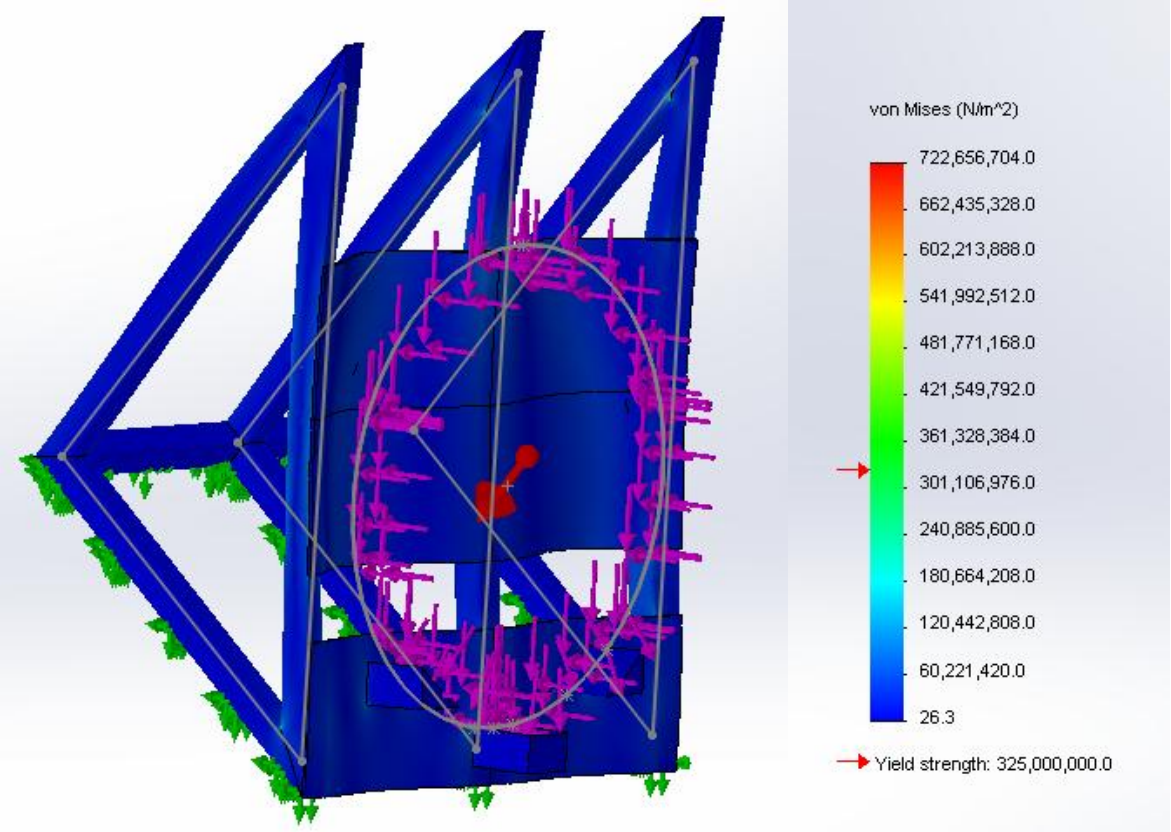

Figure 11: FEA on operating ring placed on support structure

As shown by the legend, there is a large variation in the present stresses. To clarify the analysis, we displayed the results by safety factor and adjusted the legend to contain the reasonable factor of safety levels throughout the structure. The factor of safety shown is relative to the yield strength of the assumed material, i.e. if the safety factor at some point is 2, that area is experiencing half of the material yield stress. The results are shown in Figure 12.

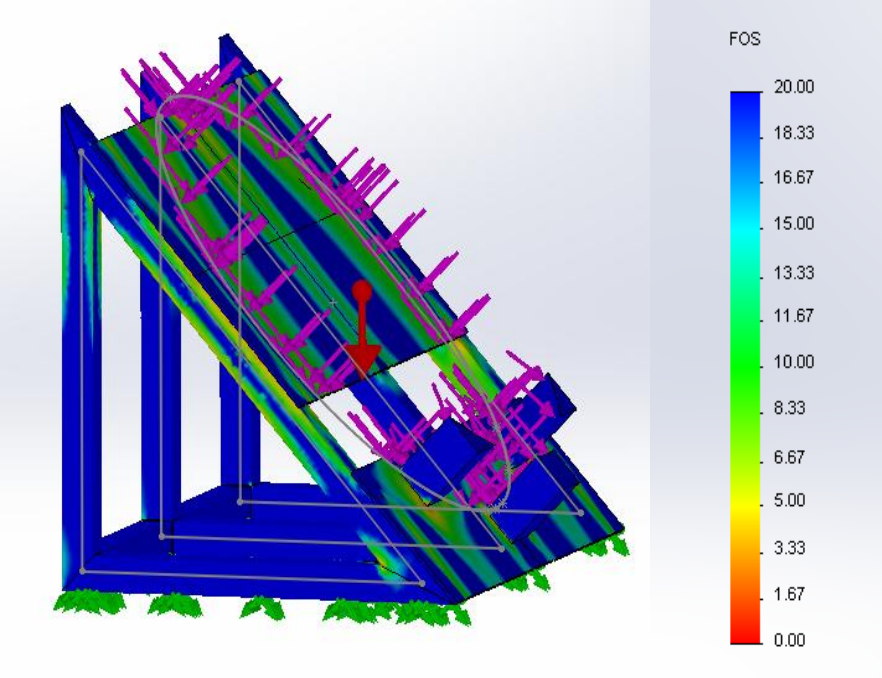

Figure 12: FEA indicating factor of safety

As we expected, at the joining areas of the structure, as well as at the sharp corners (bottom of corner of the triangles and connections between the plates and the stops) the structure is subjected to high stress values. These high values are due to a large (theoretically infinite) stress concentration factor. We know that in reality, an infinite stress concentration factor is not possible, due to stress re-distribution. For this reason, an attempt to reduce the stress concentration factor around the cracks was made by adding gussets to the corners of the triangle supports and weld fillets to the connecting points between the stops and the bed plates. One of the added gussets is shown in Figure 13.

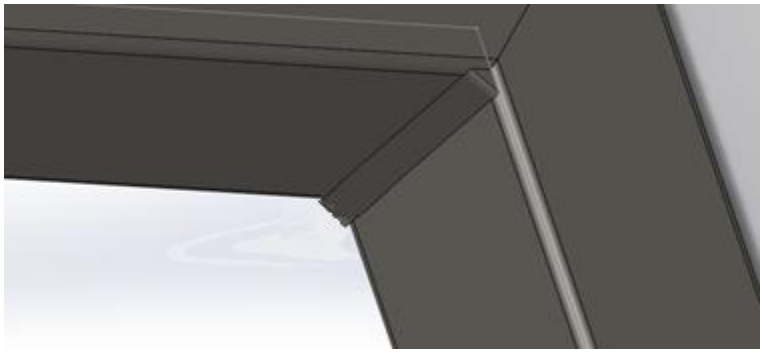

Figure 13: Gusset added to corner of triangle supports

Implementing these features into the design slightly reduced the stresses between the plate and the stops, but did little for the stress values in the triangle supports. We also noticed that the triangles were too tall, and there was excess material above the highest plate that was not taking any of the load. We removed this to reduce the cost and weight of the design. With the necessary analysis done on the AFD, we can now break down a preliminary cost.

2.2.4 Cost Analysis of AFD

A preliminary cost analysis was made, and the estimated total cost for the AFD is $18,435.28. Details of the cost breakdown is shown in TABLE I. This will be compared to the pivot base design.

TABLE I:
BREAKDOWN OF COST ANALYSIS OF ADJUSTABLE FLAP DESIGN

Expenditure	Price per unit	Units	Total Cost
10”x10” Square Tubbing 20’	$776.40	11	$8,540.40
1” thick Steel Plate 4’x8’	$1254.4	6	$7626.40
2 1/2” x6” Steel Flat Bar 12”	$192.12	4	$768.48
Labour	$20.00	75	$1500.00
		Total	$18.435.28

Now that a full analysis has been made on the adjustable flap design, we then moved forward to perform a full analysis on our second chosen design, the pivot base design.

2.3 Pivot Base Design (PBD)

The pivot base design (PBD) is based on the original concept as shown in Figure 14. Full details of the original design are in Appendix A for supplementary purposes.

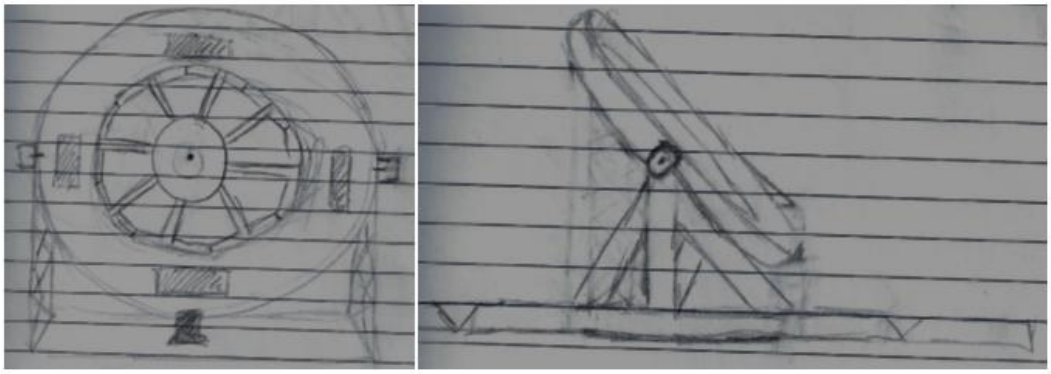

Figure 14: Original pivot base design (PBD)

However, the concept has been refined in order to simplify the design. The following issues from the pivot base design were noted:

1. The varying angle of the structure due to the pivoting mechanism will cause the stresses in the structure to be different at different angles. This would make the analysis of the structure complicated and time consuming.
2. The use of the magnets are not cost efficient. Also, testing and proper analysis would have to be done in order to confirm the workability of the magnetics for the purpose of the project (ex: keeping the structure in place). On top of the analysis of the structure itself, analyzing the strength of magnets would add another level of complexity not needed for our project.
3. Adjustability of the circular sprocket is undetermined and its manufacturability will be difficult.

The manufacturability was first taking into consideration; hence the material selection for the design was done based on the material available from several suppliers. Also, the cost was considered at the same time as the material selection so the overall design structure can be as cost efficient as possible.

With these analyses, new designs modelled was made to exclude any of the issues outlined above. The new designs are outlined in sections 2.3.1 and 2.3.2.

2.3.1 Second Version of PBD

A major overhaul was done on the second version of the PBD. The magnet supports and pivot base idea was scrapped; the pivot base is replaced by a simple triangular base. This new design was made to hold the operating ring in the extruded cut circle. Although this design no longer includes a pivot base, the name of the design will be held consistent to avoid any confusion. The design is shown in Figure 15.



Figure 15: Second version of PBD

Although this refined design is simpler than the original PBD, we eventually deemed this design to still be complicated for many reasons. First, there is an excess amount of individual parts that need to be welded together, which over-complicates the design. The top strips materials of the structure does not need to be part of the design because the majority of the weight of the operating ring will only act on the lower strip.

2.3.2 Third Version of PBD

In light of the complexity our team established with the second PBD design, a third version of the PBD was made with fewer materials than the second version. In this design, the adjustable mechanism to hold the inner diameter of the operating ring has already been

determined and implemented. Four threaded rods hold the inner diameter in place to keep maintain the operating ring's shape. The materials located on the upper half of the ring have been removed for reduced cost, and a new bottom inclined ring stop has been added. Details of this design are shown in Figure 16.

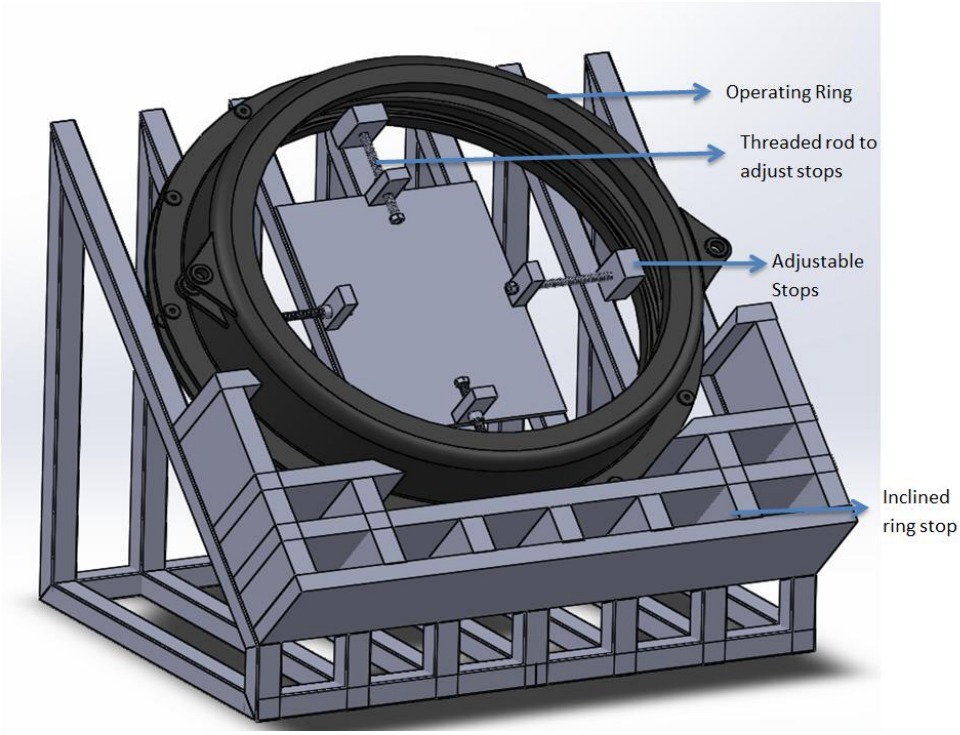

Figure 16: Third version of PBD

Although our team believed this third version was a good idea because this design provided great support on the inner and outer edges of the operating ring, we predicted this design would be too expensive and complicated to manufacture, much like the first two versions of the PBD. Before performing an FEA on this design, our team decided to analyze the cost of this design first. We decided that if this design is more expensive than the adjustable flap design (which is the assumption we made), an FEA is not necessary.

2.3.3 Cost Analysis of PBD

A preliminary cost analysis was made, and the estimated total cost for the PBD is $24,139.18. Details of the cost breakdown is shown in TABLE II.

TABLE II:
BREAKDOWN OF COST ANALYSIS FOR PIVOT BASE DESIGN

Components	Dimensions (in)	Quantity	Cost
Flat bar	Cross-section: 2 x 8	10	$456.96
Square Tube	Cross-section: 8 x 8 x 3/4 Length: 240	10	$18,995.50
Threads	Length: 36	4	$2413.8
Nuts	Size: 3 ½ in (Width)	4	$273.92
Labor	$20/hr	100	$2000
Total	$24139.18		

As predicted, the cost of the pivot base design is more than the cost of the adjustable flap design. Therefore, there is no need to perform a finite element analysis on the pivot base design.

Even though the pivot base design was found to be too expensive, our team decided to implement the threaded rod from the PBD to the adjustable flap design to ensure the operating ring maintains its shape throughout the loading and transportation process. Combining the threaded rod idea from the PBD to the existing AFD in section 2.2.3 resulted in our final chosen design, as outlined in section 2.4.

2.4 Final Converged Design

We realized that the pivot base design (Figure 16) had too many components to be feasible. This was the deciding factor for selecting the adjustable flap design (Figure 7). We also added features to the adjustable flap design, such an upper stop to ensure the ring's inner diameter maintains its form and a threaded rod and matching coupling to allow this upper stop to be adjustable (idea taken from the PBD). The upper stop with matching threaded rod and coupling nut are shown in Figure 17.

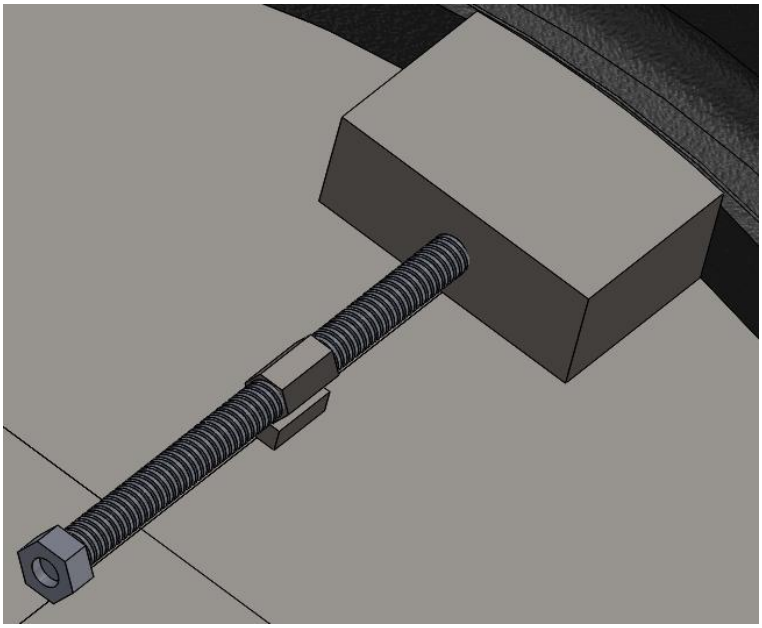

Figure 17: Upper stop with matching threaded rod and coupling nut for final design

Once we mated this upper stop to the assembly, we considered the first stage of design complete. The first stage of our final selected design is shown below in Figure 18. After consulting with our client, we realized that our design still had some flaws. The changes we made to arrive at our final design are outlined in sections 2.4.1 and 2.4.2

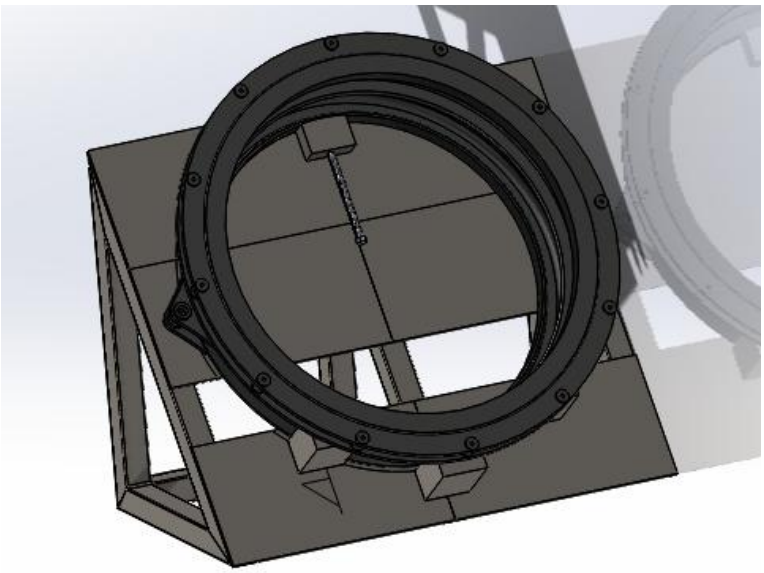

Figure 18: Adjustable flap design with mated upper stop

2.4.1 Client Feedback

Once we decided on this design, we showed our client the model. We showed our client the current models because we wanted to ensure that the client was satisfied with our current progress and the design itself. Our client reviewed the models and pointed out some aspects of our design that could possibly be improved, so we started to change the design accordingly.

The first change to be implemented was the removal of the curved stops. They were unrealistic considering their size. We flattened the stops to try and make the stops easier to manufacture. We decided on going with simple flat stops that lie tangent to the circle and are welded onto the bed of the structure. The stops that we re-designed are shown in Figure 19.

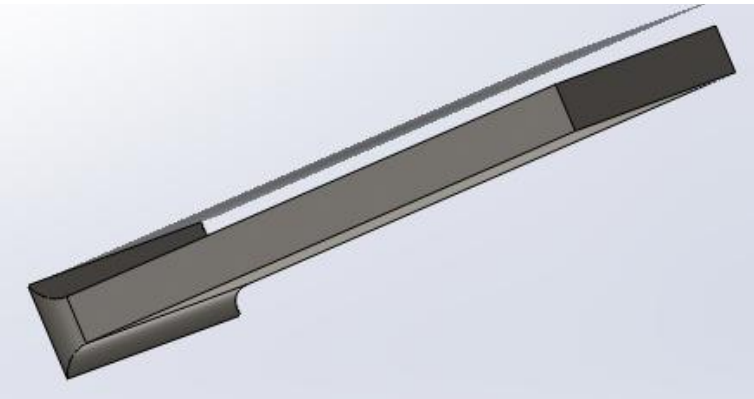

Figure 19: Redesigned flat bottom stops

We decided that since we were reducing the size of the lower stops, we could reduce the size of the upper one too, though not as dramatically. We shrunk the thickness of the block and curved the back of the stop. The upper stock was now essentially a straight block that is bent to follow the curve of the inner diameter of the operating ring.

Additionally, we found that the orientation that we were holding the operating ring (the operating ring was flipped upside down), was less efficient than holding it right side up. Flipping the ring meant less handling time and less chance for the procedure to go wrong. We adjusted the placement and orientation of the operating ring on the bed, so that it was right side up.

We also found that we could remove two of the plates on the bed (the middle two) as we found that the ring could be supported without them. Removing these plates reduced the cost of our design by about $2500 [5] and dramatically reduced the weight as well.

Combining all of these changes into the final structure yielded the next revision of our design, as shown in Figure 20.

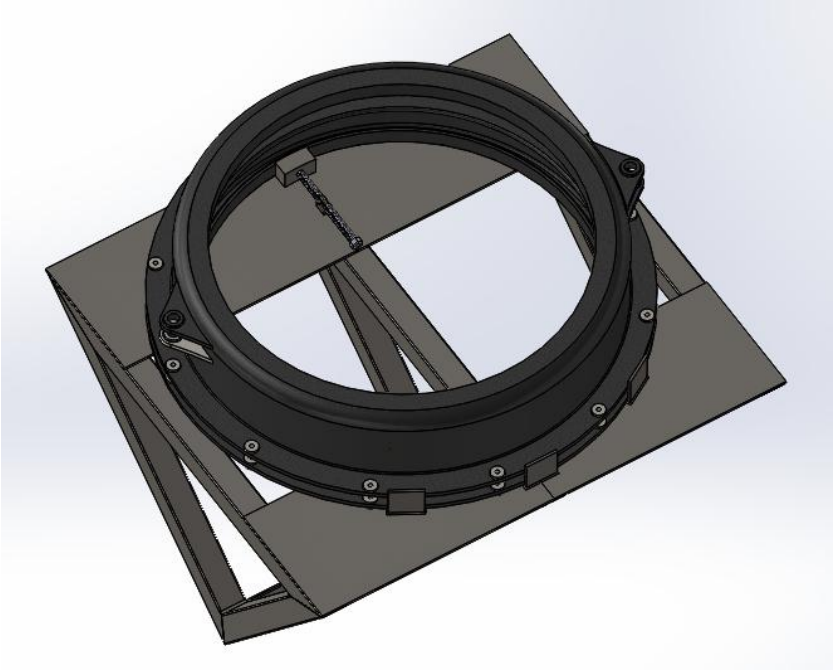

Figure 20: Second revision of final design

At this point, we performed an FEA to determine if the new smaller stops were able to support the weight of the operating ring and also to see if the new filleted edges between the bed and the stops reduced the stress concentrations previously found in those areas. This is shown in Figure 21.

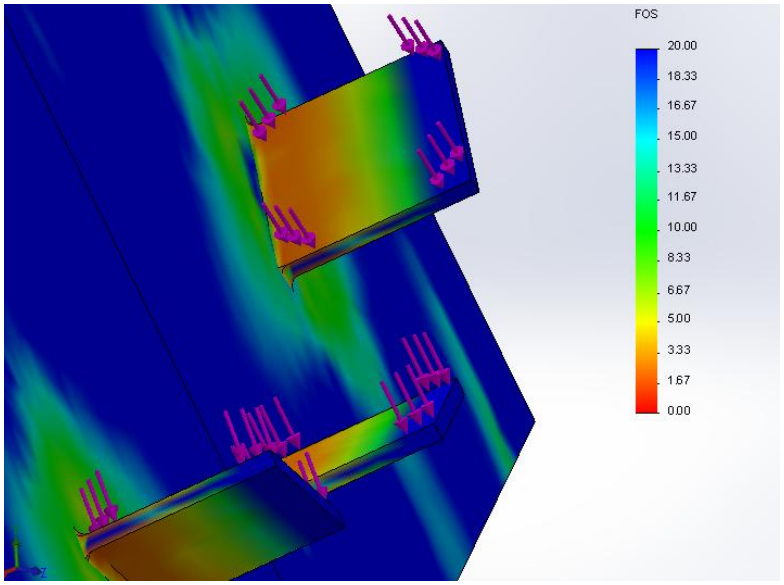

Figure 21: FEA of flat bottom stops

In doing this analysis, we treated the loading as uniformly distributed. However, in reality, it is not. Since these stops are flat, the real loading is more like a point load at the point of contact. We then realized that the stops must be altered again to provide a more realistic scenario. At this point, we made the final changes to our support structure. The final design, which includes the altered stops, is detailed in section 2.4.2.

2.4.2 Final Design

It was at this point that we considered going back to curved stops. Curved stops help maintain the size of the ring and are not difficult to manufacture, if they are kept small. So combing the idea of curved stops, with the reduced size and fillets (representing weld joints) introduced with the flat stops, we came up with the final design of smaller curved stops, as shown in Figure 22. The stops also feature a gusset which is designed to reduce deformation and stress in the stops when the operating ring is loaded on the support structure.

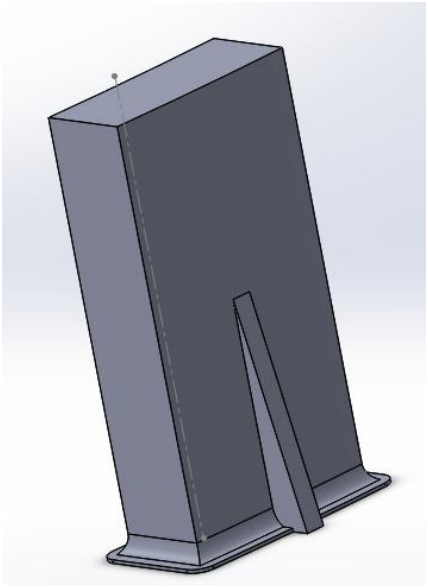

Figure 22: Reduced size curved stops

After this point, we had reached the final iteration of our design. The design is shown in Figure 23 and features many different ideas consolidated over the course of the design project.

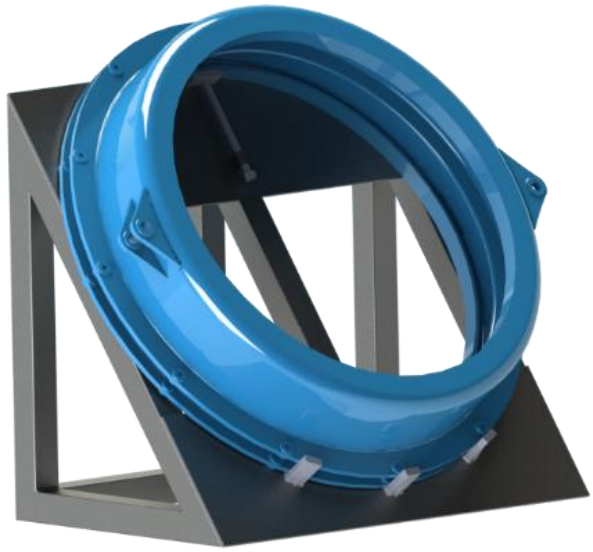

Figure 23: Final design render

The dimensions of the assembly are shown in Figure 24.

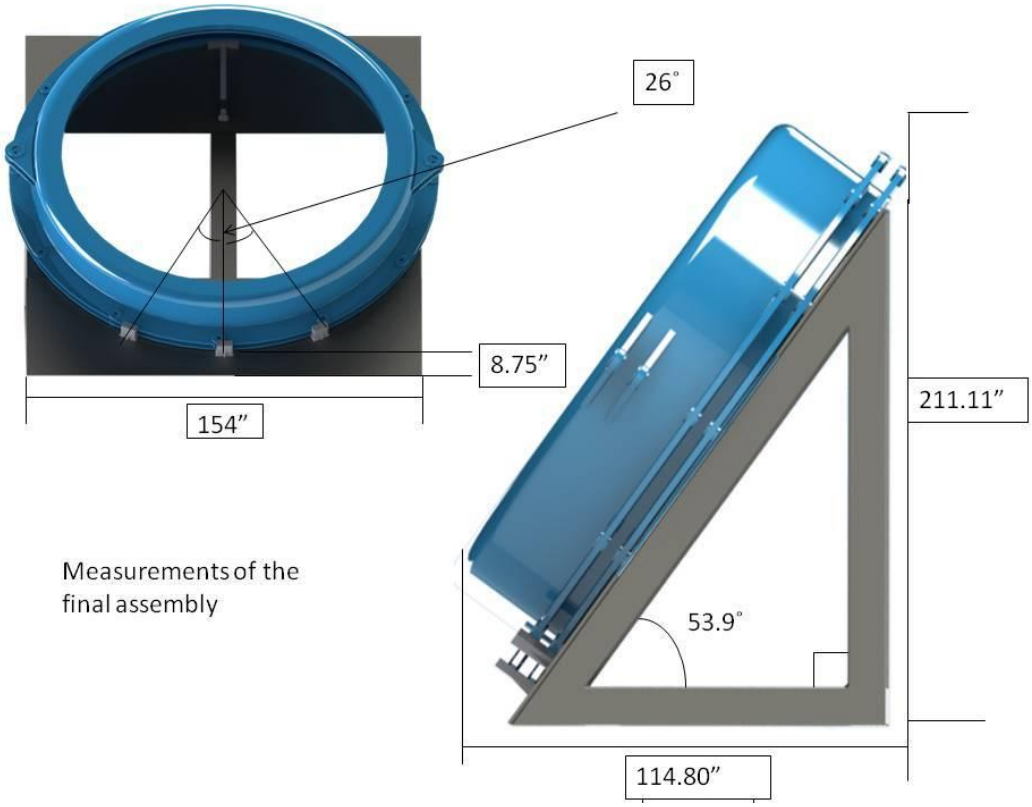

Figure 24: Dimensions of final design assembly

2.4.3 Final Design Dimensions

The following drawings outline the necessary dimensions shown in several cross-sectional views to illustrate the information required to manufacture our support structure. The support structure is broken into several parts. The exploded view displaying all parts is in Figure 25. The drawings are shown in Figure 26-31.

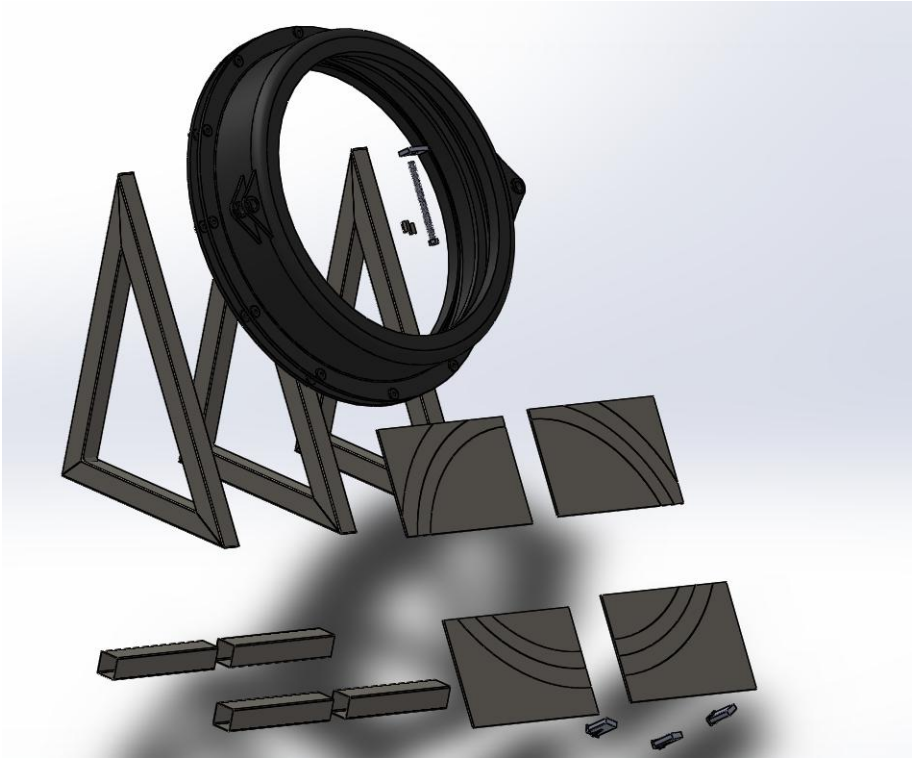

Figure 25: Exploded view of support structure

Figure 26 illustrates the dimensions for the three triangular supports.

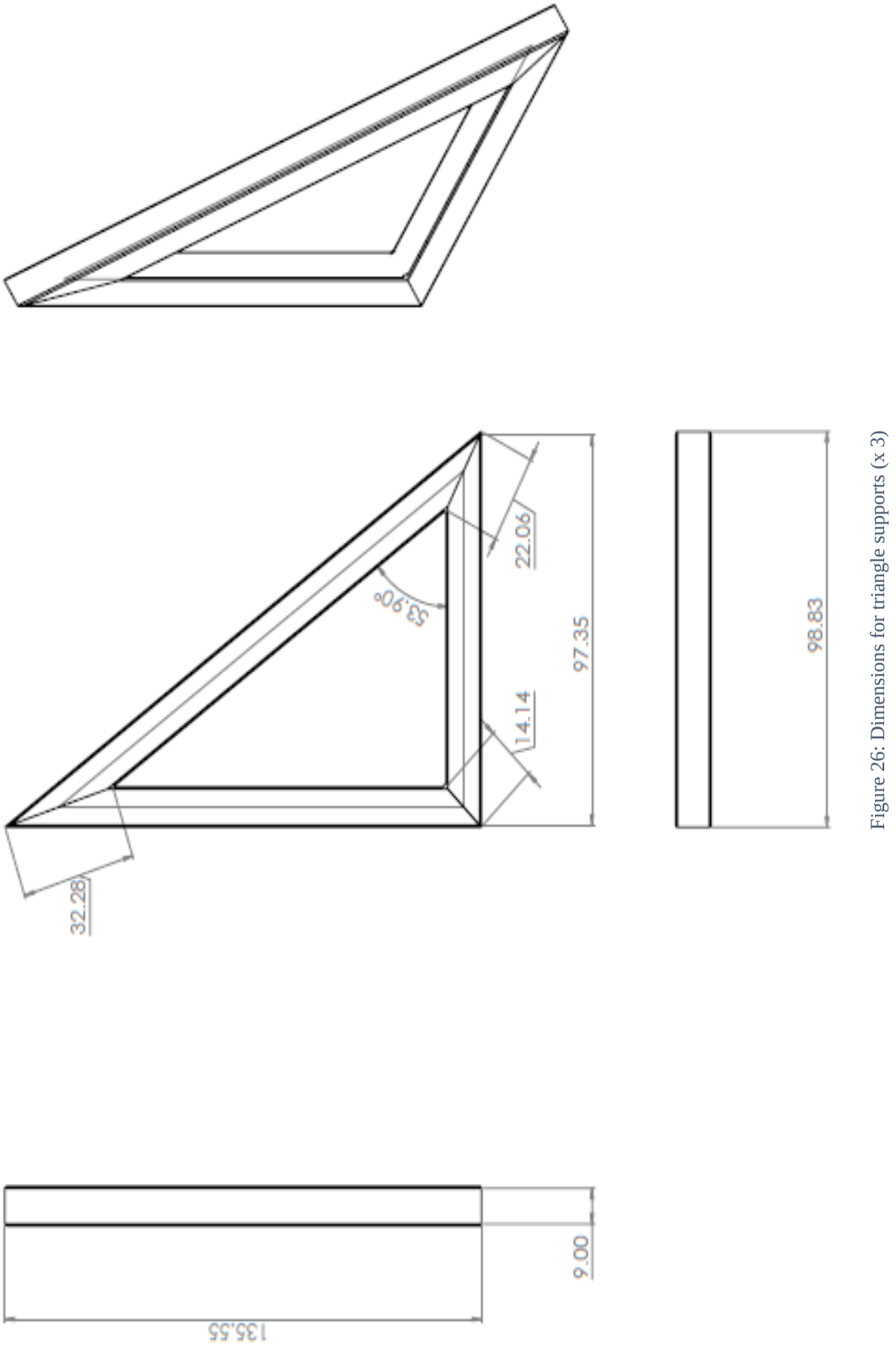

Figure 26: Dimensions for triangle supports (x 3)

Figure 27 illustrates the dimensions for the four rear support bars.

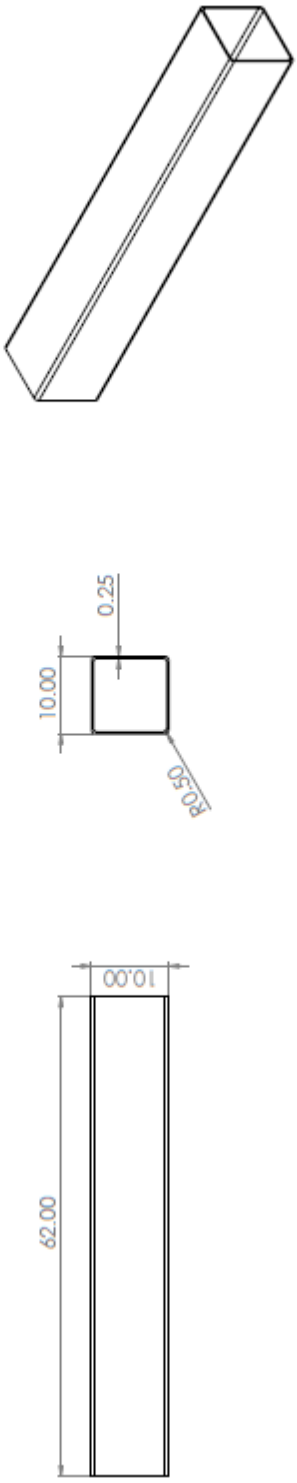

Figure 27: Dimensions for rear support bars (x 4)

Figure 28 illustrates the dimensions for the four top plates.

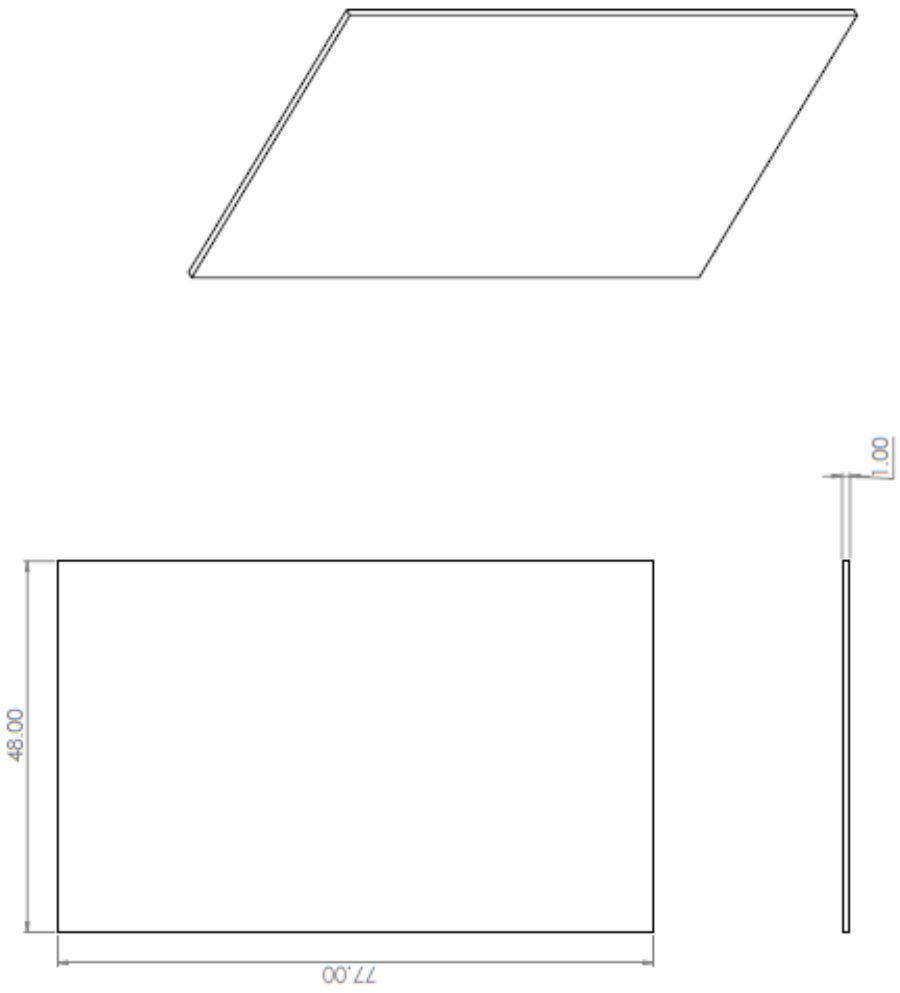

Figure 28: Dimensions for top plate (x 4)

Figure 29 illustrates the dimensions for the three bottom stops.

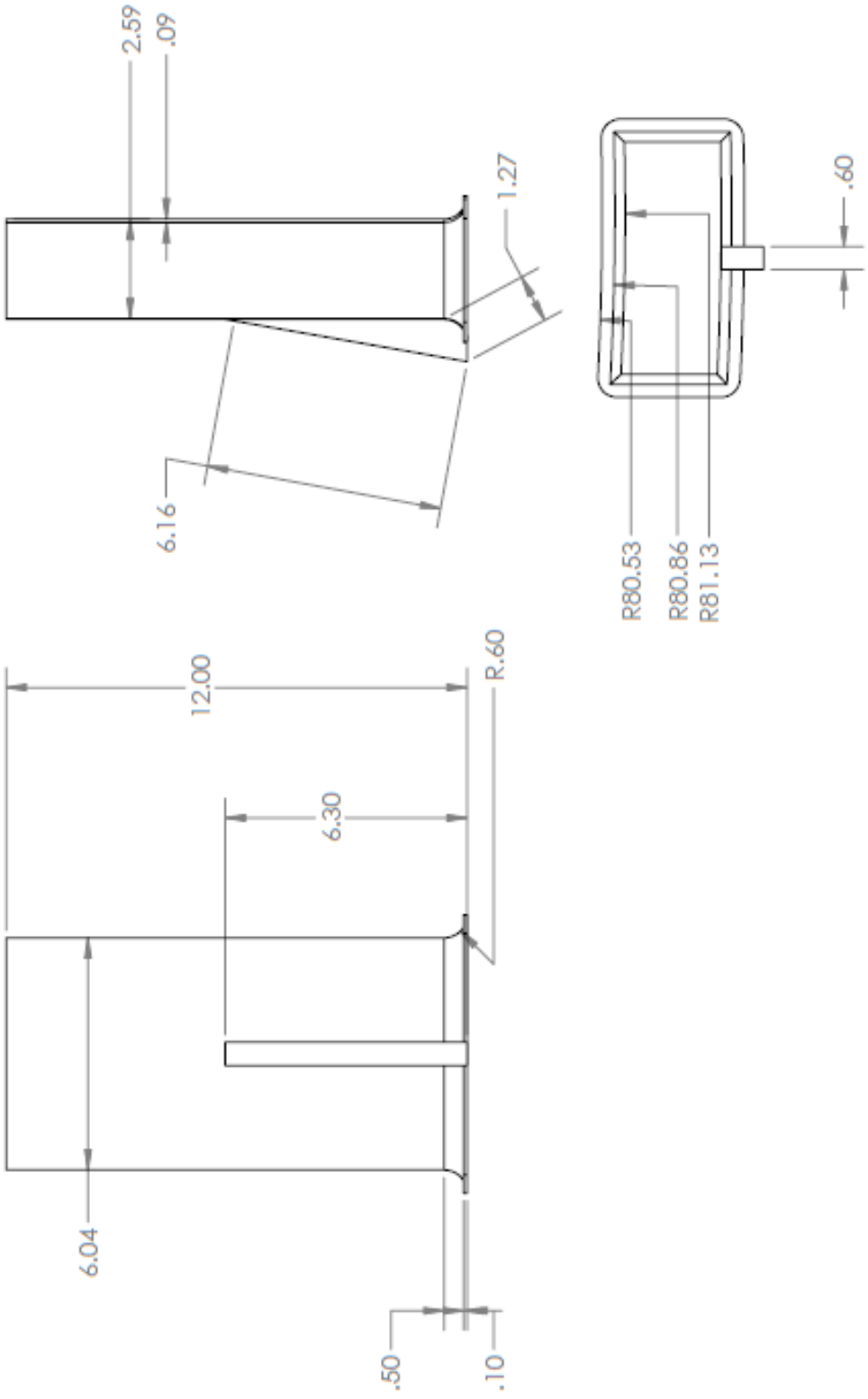

Figure 29: Dimensions for bottom stops (x 3)

Figure 30 illustrates the dimensions for the upper stop.

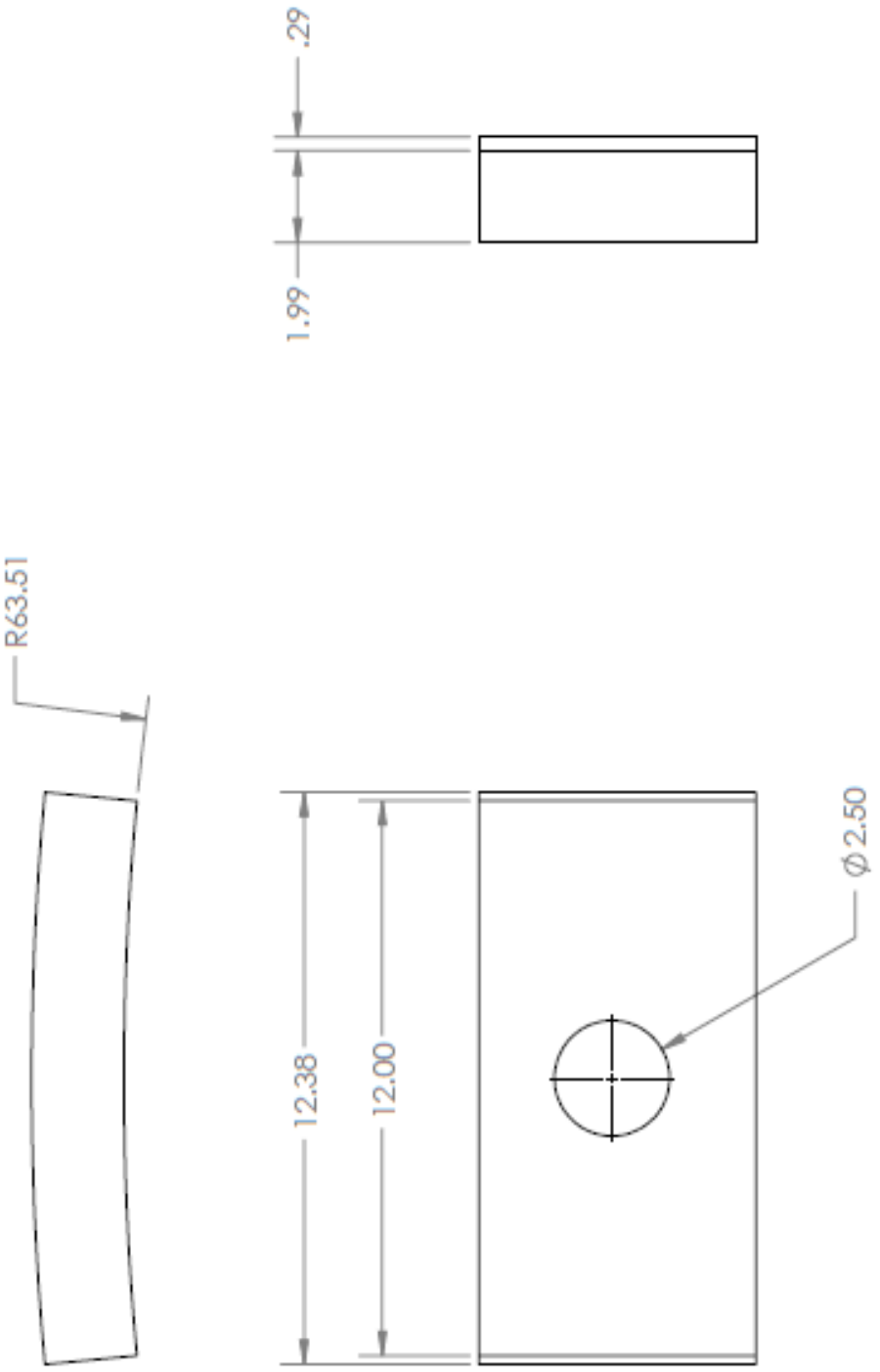

Figure 30: Dimensions for upper stop

Figure 31 illustrates the dimensions for the coupling mounting block.

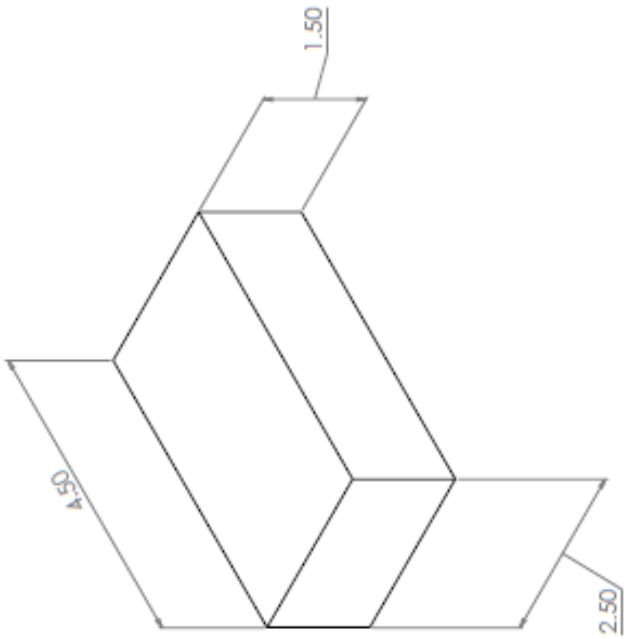

Figure 31: Dimensions for coupling mounting block

A picture of the rod coupling nut used for the threaded rod [6] is shown in Figure 32.



Figure 32: Rod coupling nut used for threaded rod

Now that the support structure has been fully dimensioned, we can move forward to performing a finite element analysis to determine the max stresses and deformation and minimum factor of safety for our support structure.

2.4.4 Stresses and Weld Sizes for Final Design

In order to set up a start point for the Finite element analysis, an analytical process was carried out in order to account for the worst case scenario on the most critical part of the structure; in essence the most critical parts are the stops at the bottom of the inclined structure which takes most of the weight of the operating ring. The worst case scenario would be:

1. Failure due to shear stress at the bottom stop
2. Failure due to high stresses at the side of the stops assuming the ring is sitting at one side of the structure

Figure *33*: Possible point of max stress in bottom stopsFigure 33 shows the point of maximum stress on the stops.

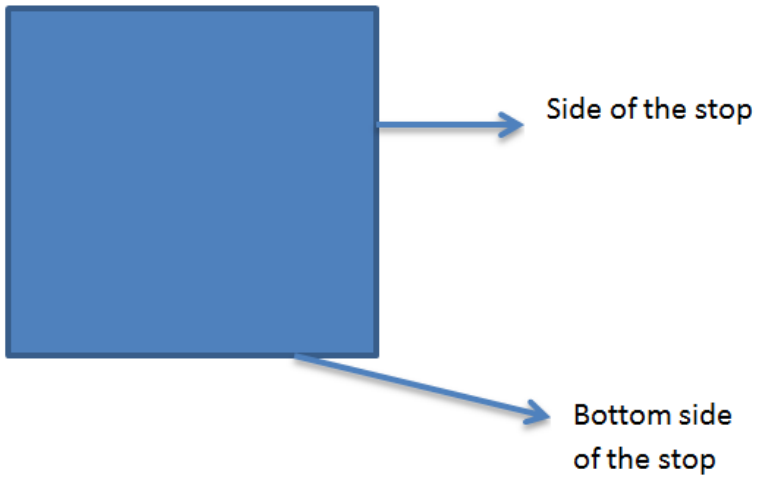

Figure 33: Possible point of max stress in bottom stops

The calculation was carried out on the stops with an assumption that the stops are straight and flat rather than curved. This was done in order to simplify the calculations. The calculations steps to establish the maximum shear and normal stresses acting on the stops are outlined as follows:

The maximum shear stress on the bottom stops was calculated by using the formula:

$$\tau = \frac{3V}{2A}$$

Where,

V = Shear stress (Weight component along the inclined of the structure)

A = Area of the cross-section of the bottom stops (dimensions from supplier)

$$\tau = \frac{3(46723.5)}{2(0.009677)} = 7.242\ MPa$$

Figure 34 shows the cross-sectional area of the curve for calculating shear stress.

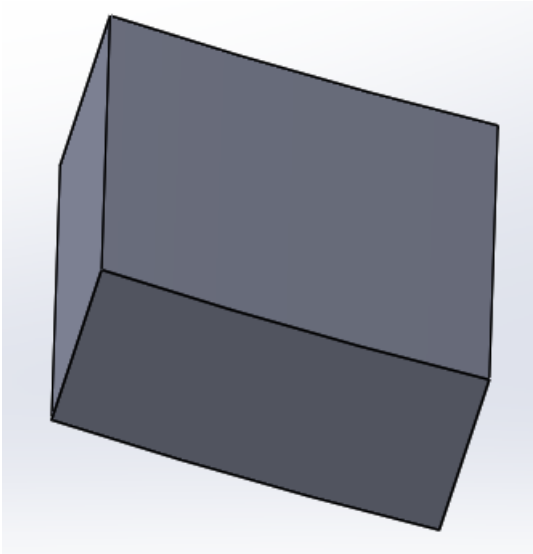

Figure 34: Bottom cross-section of the bottom stops of the ring (without fillet)

The maximum normal stress acting at the side of the stops is calculated by:

$$\sigma = \frac{MC}{I}$$

Where,

σ = Normal Stress

M = Moment about the stops

C = Distance from the center to the edge of the stop

I = Moment of Inertia

Figure 35 illustrates the orientation of the moment acting on the bottom stop.

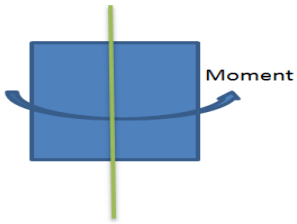

Figure 35: Moment acting on bottom stop

The moment is calculated as follows:

$$M = F \times d = 46723.53 \times 0.07621 = 3560.8\ N.m$$

$$I = \frac{1}{12} \times b^3 \times h = \frac{1}{12} \times 0.1524^3 \times 0.3048 = 8.99 \cdot 10^{-5}$$

$$\sigma = \frac{MC}{I} = \frac{3560.8 \times 0.07621}{8.99 \cdot 10^{-5}} = 3.02MPa$$

Required Weld

We now have to determine the minimum weld size when welding the stops to the support structure. The minimum fillet weld size is ½ in, as indicated in TABLE III:.

TABLE III:
MINIMUM WELD SIZES FOR VARYING PLATE THICKNESS



The weld geometry that should be followed is indicated in Figure 36.



Figure 36: Weld geometry for calculated weld size

Now that the stresses in the most critical part of our design has been determined, a detailed finite element analysis can now be performed on the whole support structure. This FEA will determine if our support structure can hold the operating ring without fail and maintain a minimum safety factor of two during the loading/unloading and transportation process.

2.4.5 FEA of Final Design

A finite element analysis (FEA) was performed on the Final design in order to get an approximate solution for the design problem. The model of the final design was made using Solidworks and the finite element analysis was performed on ANSYS. The FEA process is divided into two cases the, which are:

1. Case 1: Finite element model to represent normal loading of the operating ring on the support structure.
2. Case 2: Finite element model to account for the worst case scenario – the load of the operating ring acts purely on the bottom stops.

Case 1

In order to have a good representation of the design problem for case 1, the finite element model was meshed continually until the finite element solution converged. The meshed used were in the analysis are shown in Figure 37.

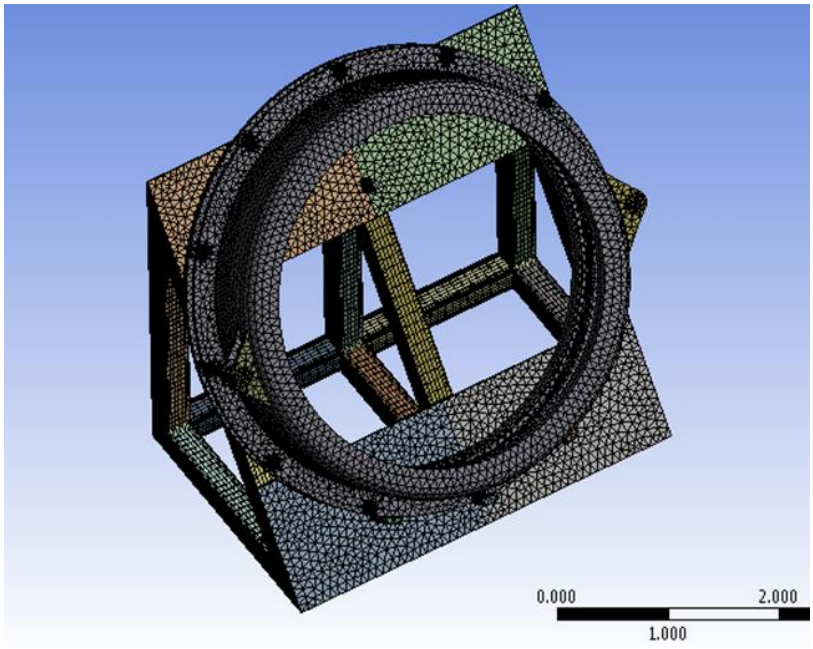

Figure 37: Meshing analysis of final design

For the next step in our analysis, a fixed boundary condition is imposed on the square tubes at the bottom of the structure. The fixed boundary condition signifies the point at which the structure is fixed to the wall. Figure 38 shows the application of fixtures to structure.

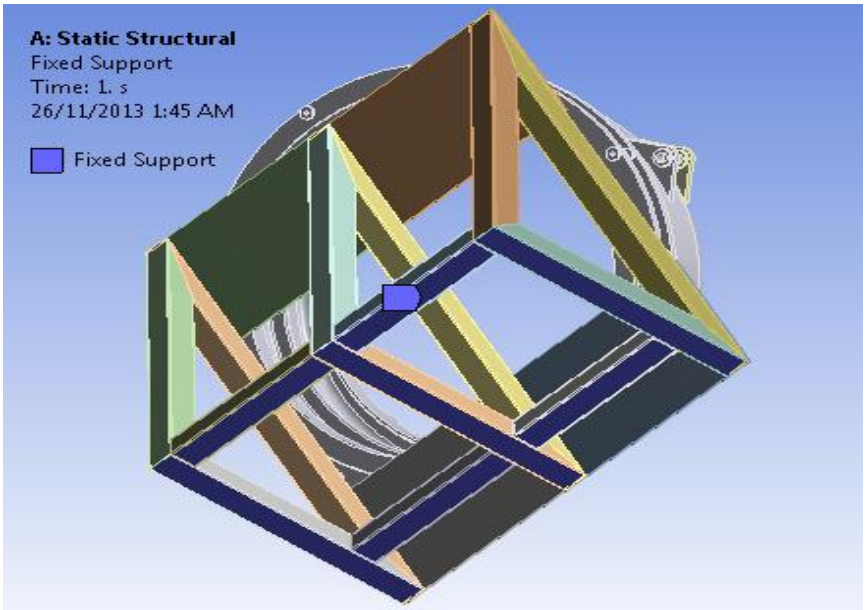

Figure 38: Fixture applied to support structure

The only force acting on the stops will be the weight of the operating ring. Hence to account for the weight of the operating ring acting on the structure, gravity was applied to the whole structure and the threads applied to the inside diameter of the ring was suppressed. The application of gravity to the support structure is shown in Figure 39.

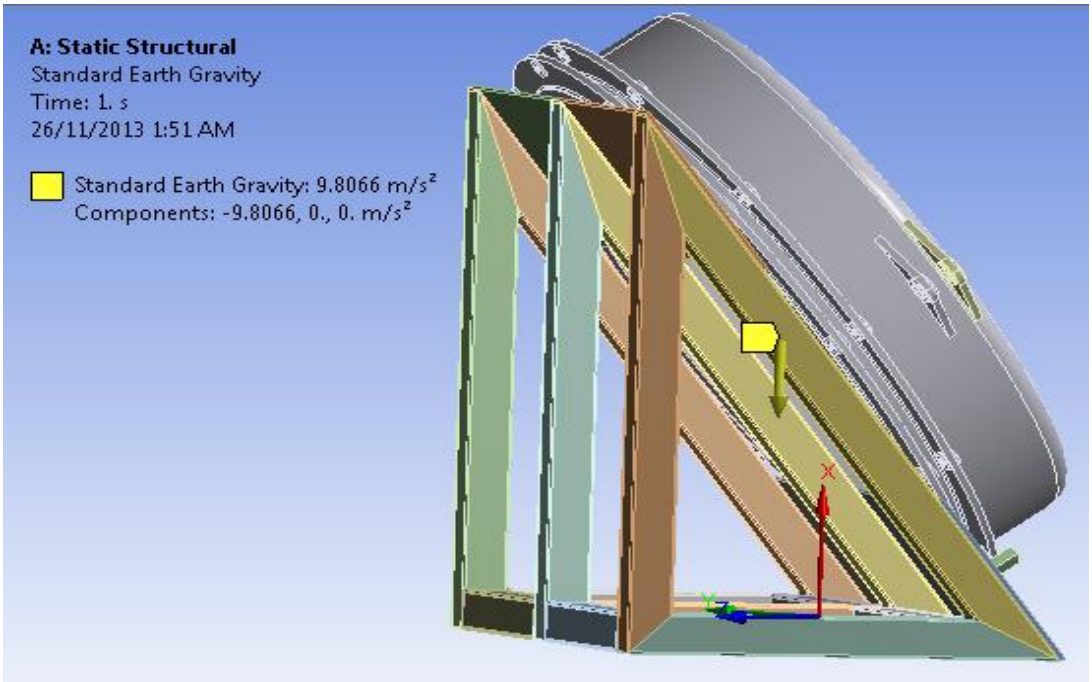

Figure 39: Application of gravity to the structure

Another consideration before solving the finite element model was to make sure the contact interaction between the operating ring and bottom stop was a good representation of the problem, as shown in Figure 40. All sharp edges in the structure were inspected in the structure in order to eliminate the case of stresses going to infinity. In eliminating the sharp edges, a fillet of 0.6 inches was applied to the bottom stops. However, this fillet was not sufficient - a thin feature was made along the base of the filleted base of the bottom stops.

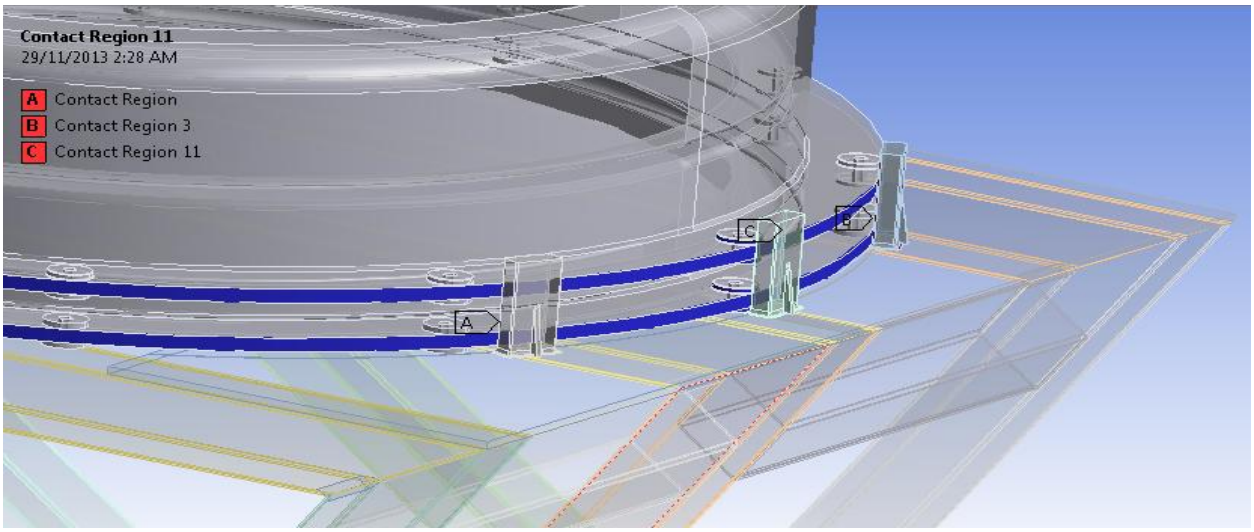

Figure 40: Contact surface between bottom stops and operating ring

Figure 41 shows the changes in bottom stops in order to get a component that minimizes the chances of the FEA model not converging.

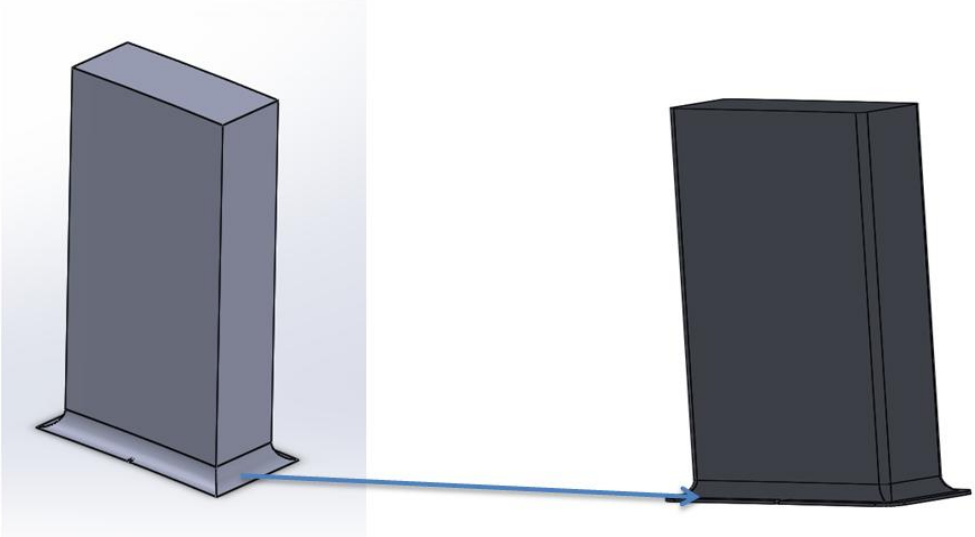

Figure 41: Change in bottom stop for convergence purpose

In order to justify the result for the final design the convergence study was carried out to know the accuracy of the results. In essence, the result for the FEA converges when there is no significant change in the FEA result when the elements in the model are increased. The convergence of the maximum stress in the FEA model is shown in TABLE IV.

TABLE IV:
MAX VON MISES STRESS FOR THE CORRESPONDING ELEMENT

Elements	Max. Stress(Mpa)
142970	27.996
158722	30.157
162487	33.76
338578	33.77

The convergence of the maximum stress is graphed in Figure 42.

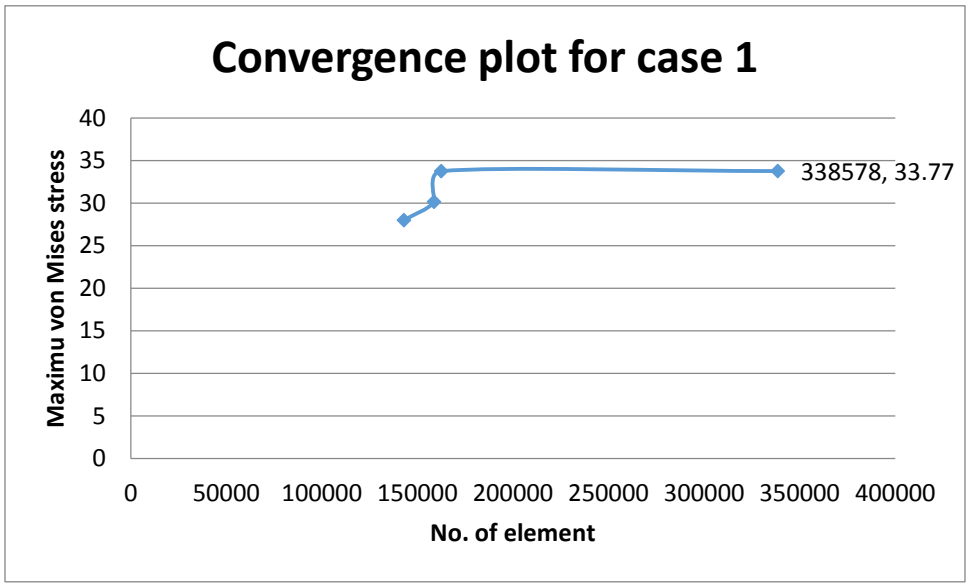

Figure 42: Convergence plot for normal loading FEA study

After making a similar design representation of the physical design problem by applying loading, fixtures, and meshing, an FEA results that converges was produce by the ANSYS Software. Figure 43 shows the von Misses stress results obtained from ANSYS.

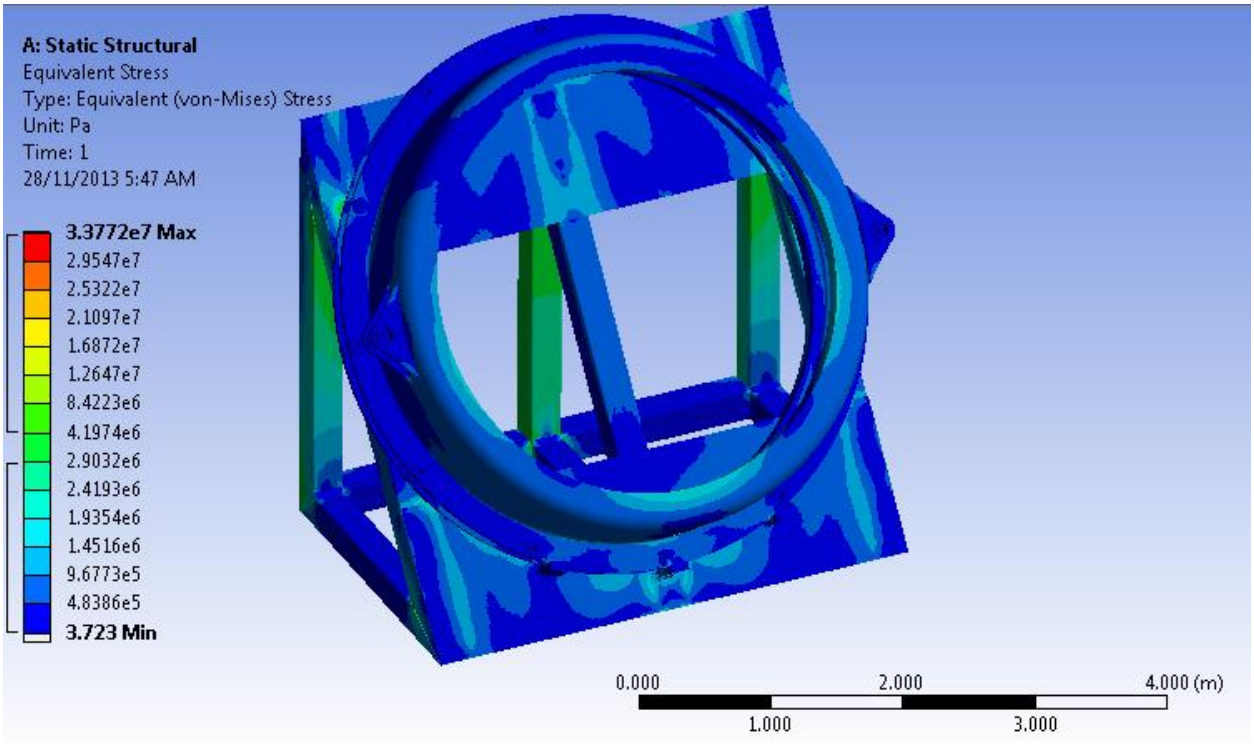

Figure 43: Stress distribution around the structure for normal loading

The max value of stress on the operating ring is within the range of 3.723 Pa to 2.4193 MPa. This range is significantly to the value of yield strength of gray cast iron which is 276 MPa, Meanwhile, the maximum stress in the structure was 33.77 MPa which is below the yield strength of structural steel (372.3 MPa). Therefore, the stress distribution shown in Figure 43 shows safe stress in both operating ring and structure, which shows our structure will not fail. The point of highest stress in the structure is shown in Figure 44.

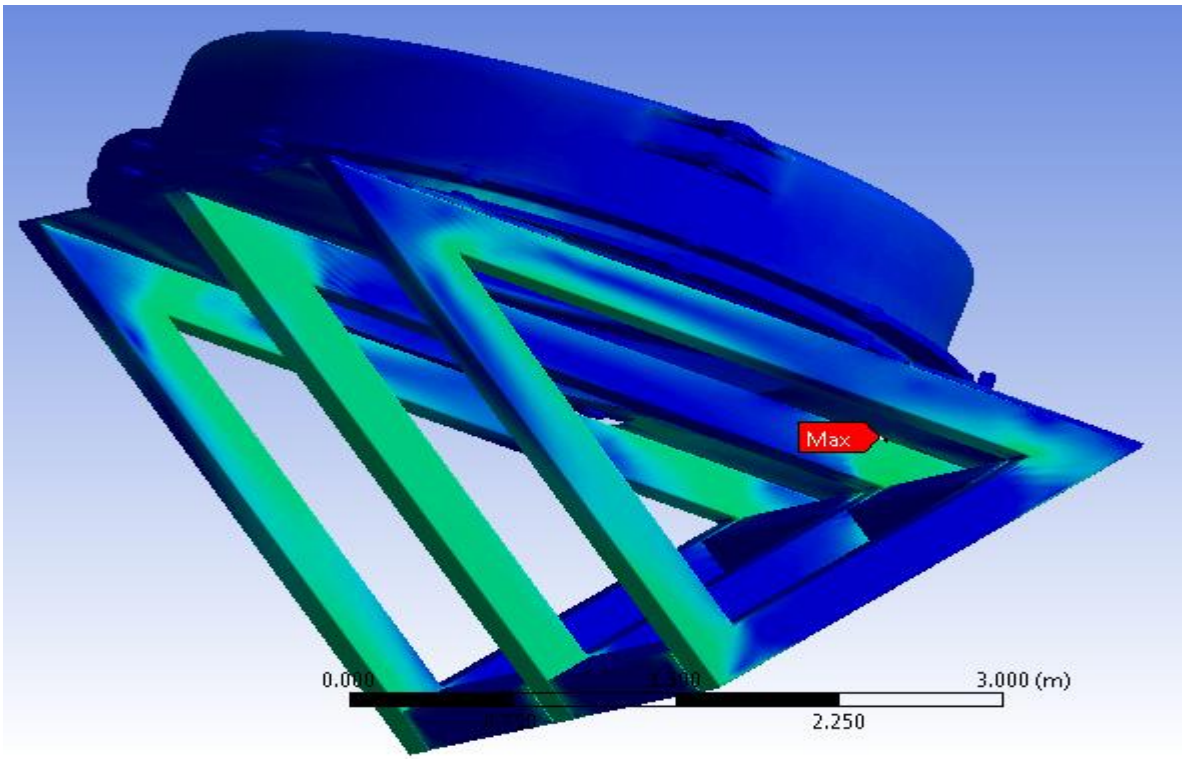

Figure 44: Point of highest stress in the structure for normal loading

Another important result obtained from the FEA study was the deformation, which is needed to be significantly small upon loading the operating ring. Deformation on the lower stops and where the operating ring makes contact with the plates is especially important, as these areas are taking the brunt of the operating ring's weight. The deformation for the structure and operating ring is shown in Figure 45. Maximum deformation occurs at the bottom of the top plates (in red) at 0.138 mm. The maximum deformation that occurs at the bottom stops (0.00396 mm), where most the weight of the operating ring acts, is significantly lower than the max deformation (0.138 mm). From the FEA, we can conclude that the support structure can support the operating ring with low overall stresses and deformation.

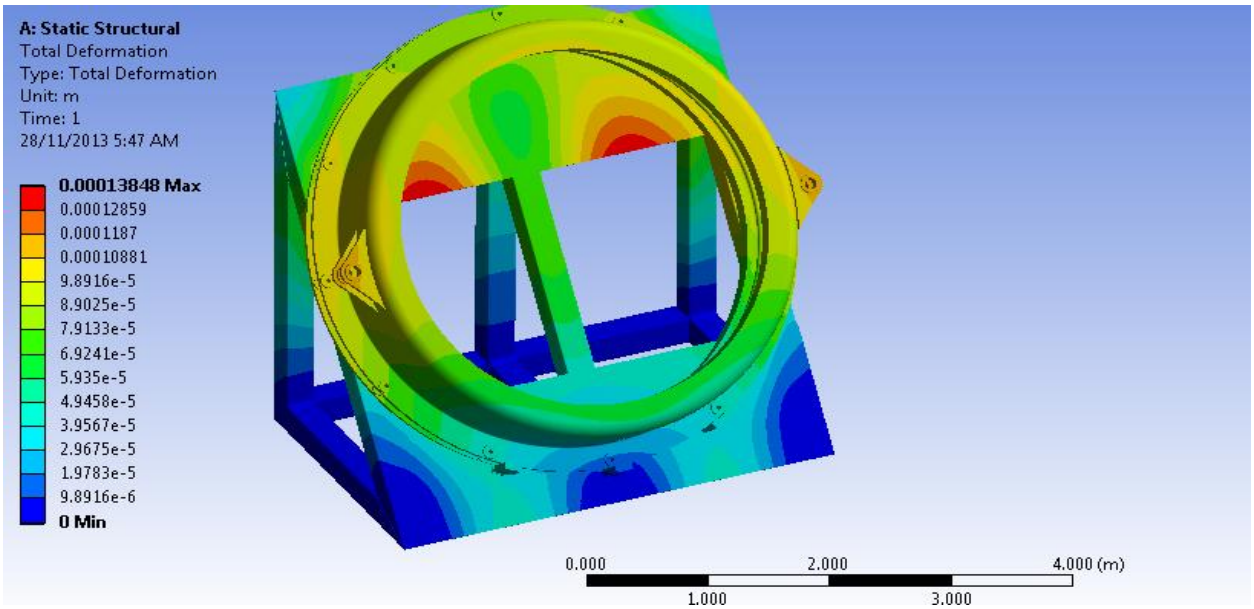

Figure 45: Deformation on the structure for case 1

Case 2

We then now analyze the max stresses and deformation in case of all the force directly acting at the weld joint on the stops (as a worst case scenario). We assume the force from the ring is applied directly to the edge of the bottoms stop. The fixture is the same as shown in Figure 38, however, the operating ring is suppressed and the decomposed force of the operating ring is applied to the bottom stops as shown in Figure 46.

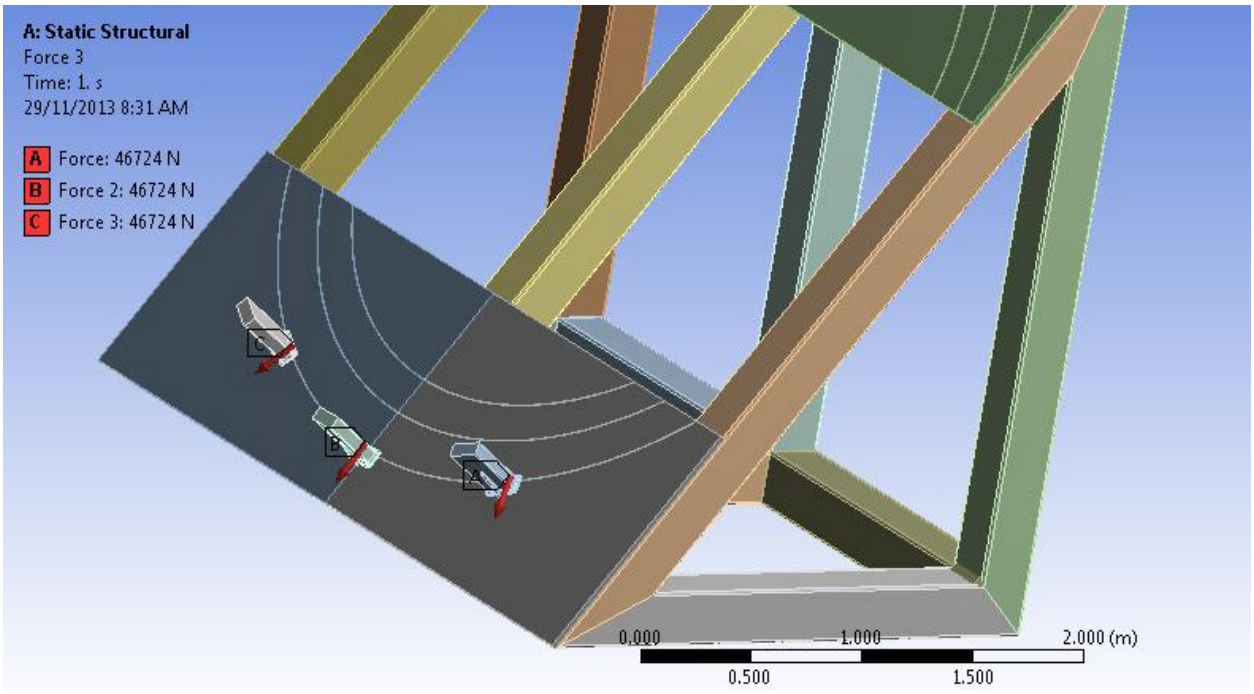

Figure 46: Loading scenario for case 2

We now perform a convergence study to determine the max Von Mises stresses acting on the structure. The convergence study for case 2 was performed in the same way as case 1 - the number of elements and max Von Mises were the tools in performing the study. The convergence plot is in Figure 47.

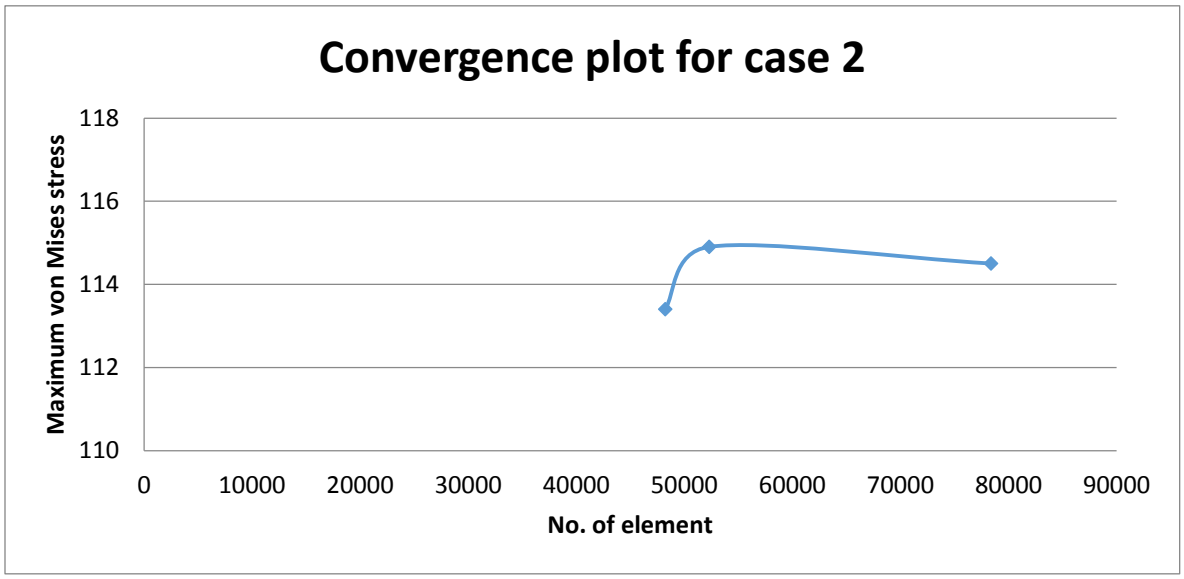

Figure 47: Convergence of max Von Mises stress for case 2

The Maximum stress on the bottom stops and the entire structure is due to the force application to the fillet edge. The max stress occurs at the bottom stop, which is 114.5 MPa. The result of the Von Mises stress distribution of the structure is shown in Figure 48.

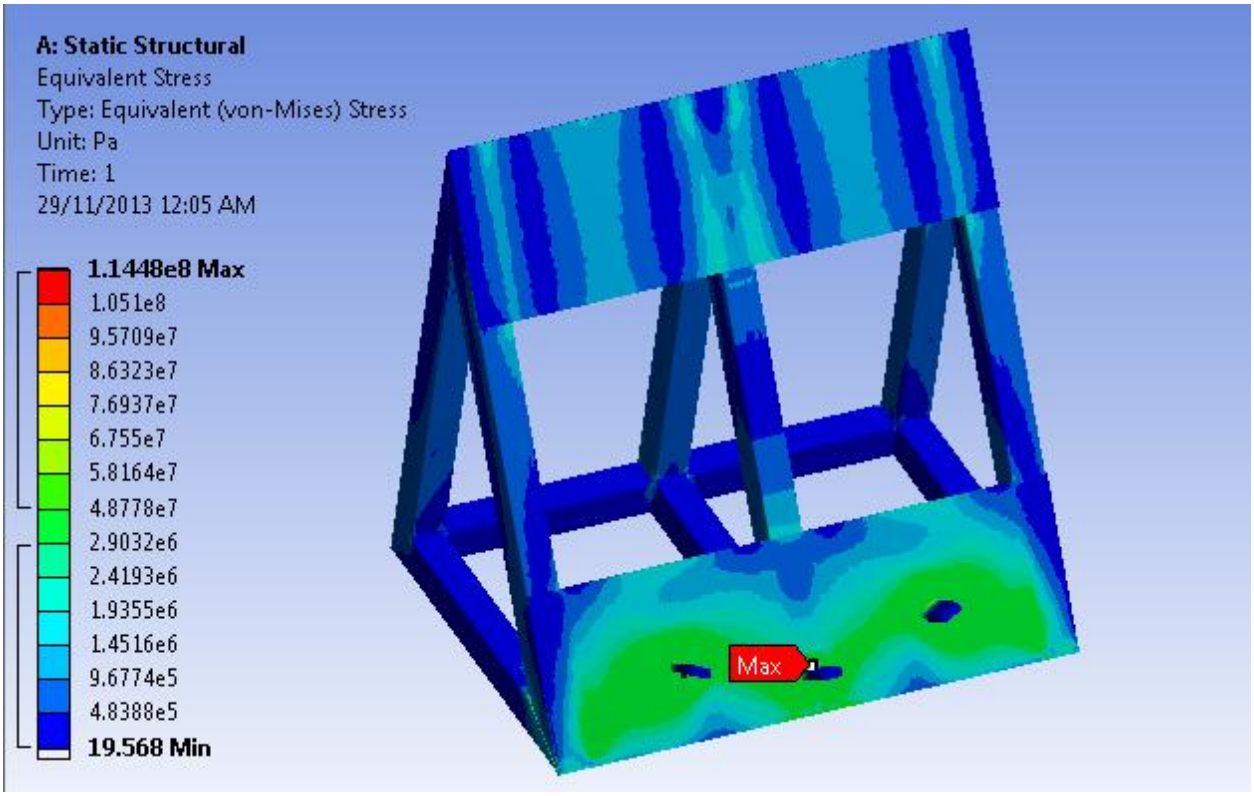

Figure 48: Stress distribution for case 2

The point of the highest stress, which is at the weld fillet joining the bottom stop and the plate of the support structure, is shown in Figure 49.

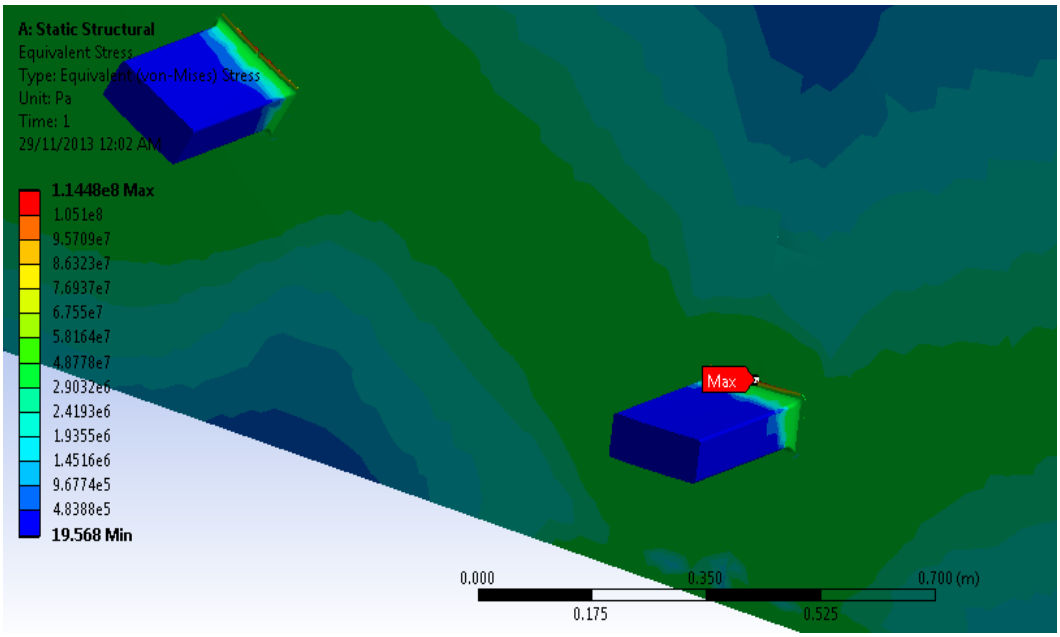

Figure 49: Regions of highest stress in the structure for case 2

Since the max stresses in the stops and structure are below the yield strength of structural steel (372.2 MPa), the model is deemed to be safe. We then performed a study on the max deformation along the support structure. The max deformation occurs at 0.195 mm at the bottom of the plates of the support structure. The distribution of deformation along the support structure is shown in Figure 50.

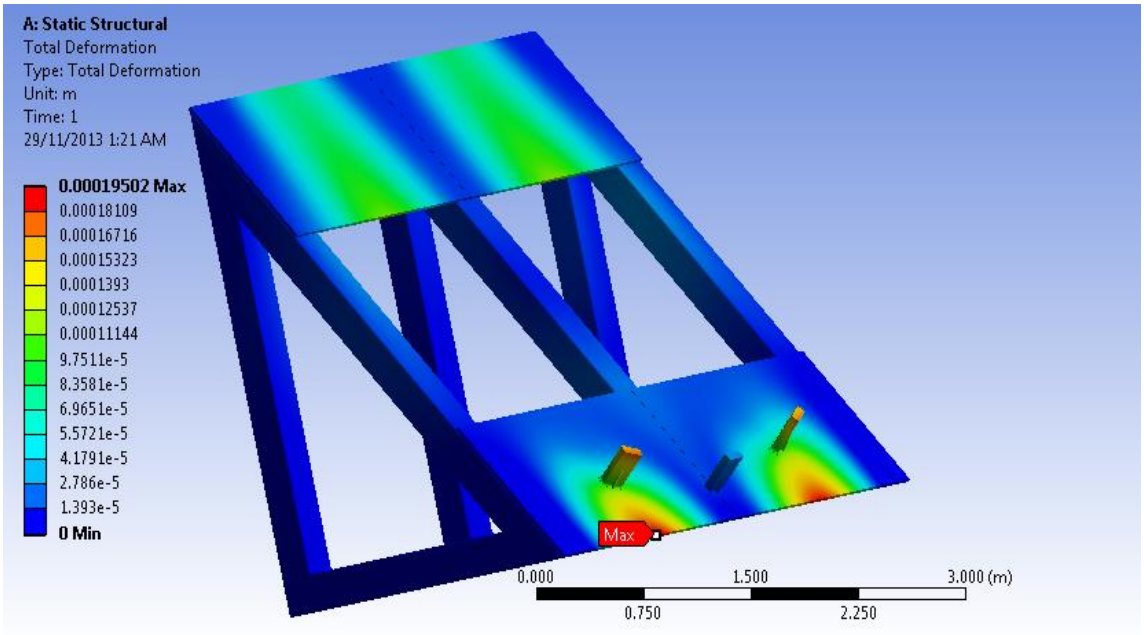

Figure 50: Deformation on structure for case 2

The factor of safety of case 2 was analyzed. The minimum factor of safety from case 2 is 2.86, which is above the allowable amount of 2. Since this is the worst case scenario, the minimum factor of safety between both cases will be 2.86. The distribution of the factor of safety for case 2 is shown in Figure 51.

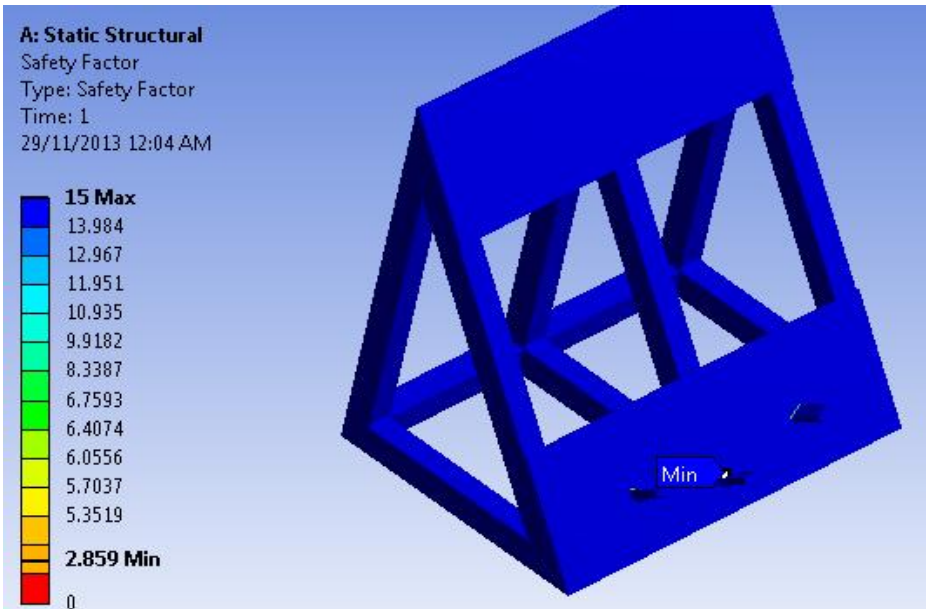

Figure 51: Factor of safety distribution for case 2

By performing a finite element analysis of our design, we have proven that our support structure will hold the operating ring without fail while maintaining a minimum safety factor of 2.86.

2.4.6 Material Selection of Final Design

After performing the FEA, we needed to determine what materials we could use for our given application. When we performed the FEA, we selected a material that had a similar yield strength to the one stated by one of our suppliers [5], from whom we derived our information of standard sizes and shapes for purchasable metal. This yield strength was given as 46000 PSI, which equates to about 317 MPa [5]. For the purposes of the FEA, the closest material we could find to represent this in Solidworks was AISI 1050 steel (annealed), which has a yield strength of 325 MPa.

To determine what other available materials could be used for our design, we turned to the Ashby method of material selection [7]. This method of selection involves defining a material index, which accurately represents the goals that we are trying to achieve by selecting this material.

From the FEA, we have determined that our minimum factor of safety was 2.86, which is close to our desired minimum factor of safety of 2, so we decided to select a material index that somehow involved yield strength, to preserve the validity of the FEA results.

The second parameter that we wanted to appear in the material index was cost. Since cost is a very important factor to most companies and projects, we decided that cost should be kept to a minimum.

Having these two parameters as determining factors for materials selection, we looked for a common material index that included both of these parameters. The resulting material index, M, was chosen: $M = \frac{\sigma_y^{\frac{2}{3}}}{(C_m * \rho)}$ [7]

Where M is the material index, σ_y is the yield stress, C_m is the cost per kg of the material and ρ is the density of the material. Since weight was not a determining factor for us, and since we were able to find an Ashby chart that only involved strength and cost, we decided to neglect density. The next step in the Ashby selection method is to obtain a log vs

log equation for the desired material property. Doing some manipulation of the above index, we obtain the following expression after isolating the yield strength.

$$\left(\frac{3}{2}\right) * (Log(M) + Log(C_m)) = Log(\sigma_y)$$

As can be seen, we can treat this equation is a straight line on a log vs. log plot, so treating yield stress as the y-axis variable and cost as the x-axis variable, the line is fully defined except for the y-intercept. We then were left to determine the value of M (or y-axis intercept on the graph) that would be optimal for our application. Selecting a base Y-intercept of 1 (setting M to 2/3), we can see in Figure 52 [8] that many materials have already been eliminated. Eliminated materials are those that fall in the shaded region (below the lines). The materials best suited to that M value fall above the line. Note that if you increase M, possible materials decrease, but the strength increases while keeping a low cost.

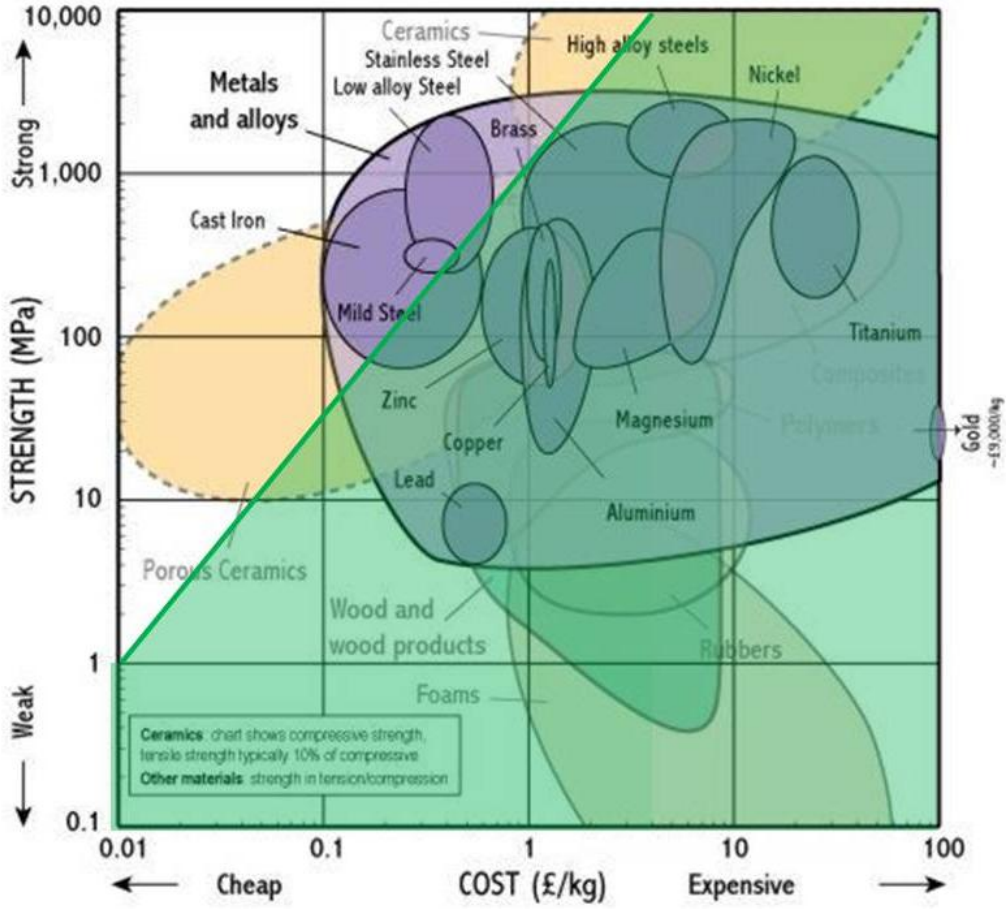

Figure 52: Ashby material selection chart with material index constraint (Courtesy of Granta Design, Cambridge, UK)

Since we wanted to maintain a yield stress that was relevant to our FEA so that our design configuration was preserved, we set an additional constraint of a yield stress at a minimum of 325 MPa, represented by a horizontal line at this value on the Ashby chart, shown in Figure 53 [8].

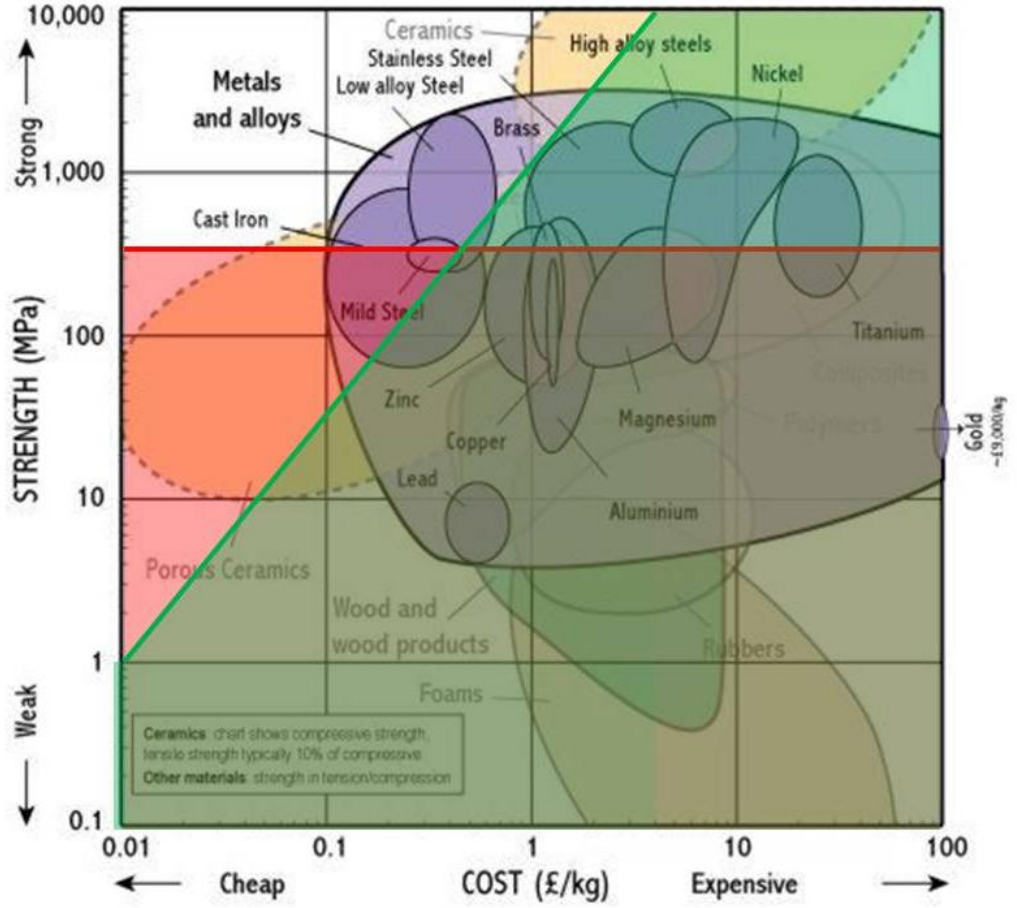

Figure 53: Ashby material selection chart with material index and yield stress constraints (Courtesy of Granta Design, Cambridge, UK)

From Figure 53 [8], it is apparent that the material chosen will likely be some form of steel (either Low Alloy, or Mild Steel, as these have the lowest cost to mass ratio, while staying above the green and red lines). Increasing the Y-intercept by one more unit eliminates almost all traditional materials, so the M value is restricted to 2/3. The material chosen in Solidworks (AISI 1050 Steel annealed) is considered a low-carbon steel, which is above the green and red lines on the Ashby chart. The material's position on the chart indicates that it is already a strong choice for the material to use in our design (as it is cheap

AND sufficiently strong), so the final selected material for the design is the one originally modelled in Solidworks, which is AISI 1050 Steel (annealed).

Now that the engineering analysis is complete, we can now move on to a risk and cost analysis of the project, as well as the loading and unloading procedure of the operating ring and support structure.

2.5 Risk Analysis

As both designs are similar, we decided that a risk analysis could be performed before any in-depth analysis was made. We assumed that the failure modes and risks associated with both designs are the same. We completed a basic risk analysis on our procedure to transport the operating ring out of the powerhouse doors in order to determine whether or not there were certain risks that would require further management than we had anticipated for.

The risk analysis involved coming up with risk elements, which would then be plotted on a risk matrix, which compared the probability of the risk occurring to the impact that the risk would have on the outcome of the project. Depending on the probability as well as the severity of the impact, further measures would have to be made to ensure that the risk is managed properly.

The eight risk elements that we came up with are as follows:

A. The ring drops from the crane
B. The top inner stop fails
C. The bottom stops fail
D. The chains holding the ring down on the bed fail
E. The support trusses of the bed of the structure fail
F. The upper stop unthreads/unwinds
G. The truck type is unavailable
H. The weather creates poor conditions for handling of the ring

These risk elements were rated on a scale of 1-5 in terms of the probability of them actually occurring. These same rankings were used to determine the impact that each risk would have to the final outcome of the project as well. Below is what each rank refers to:

1 – Very low

2 – Moderately low

3 – Neutral/Medium

4 – Moderately high

5 – Very high

Using these rankings we looked at each element to determine where they would fall and we created a risk matrix, which can be seen in TABLE V.

TABLE V:
RISK MATRIX

Probability	**5**					
	4		G,H			
	3		F			
	2					
	1		D		B	A,C,E
		1	**2**	**3**	**4**	**5**
		Impact				

In the risk matrix, everything below the shaded region does not require further action to manage the risk, whereas everything above the shaded region does require further action in order to manage the risk properly. The shaded region itself is a questionable region which might require additional action depending on the risk element.

Risk elements C and E both relate to the structure used for transporting the ring out of the door. Element C relates to the actual stops that keep the ring from sliding off the bed at its given angle. Although element C is in the questionable section of our risk matrix, element C does not require further action in order to manage its risk, because there are many different mechanisms in place, such as the upper and lower stops, and the chains, to keep the ring on the bed of the structure. Thorough stress analysis is also done on the stops as well, which is another reason why further management is not required for element C. Element E relates to the truss structures that are supporting the bed on which the ring sits on. Because thorough stress analysis has been completed on the structure, further action is not required to manage the risk.

Element A relates to the crane and the operator that are handling the ring itself. For the purposes of our design, we assumed that the operator who will be handling the ring with the overhead crane will be sufficiently trained. Therefore, we can then assume that the crane operator would not the cause of the ring falling. On top of this it is assumed that the crane itself will be maintained as per the code written in the Workplace Safety and Health Regulations for the province of Manitoba [9]. Because of this further risk management isn't required.

Both elements G and H refer to risks that are not in our control, or the control of the operators operating the ring. For element G, there is a definite possibility that the truck that is required won't be available. Because of this, further management of the risk is necessary. In order to ensure that this risk is handled safely, multiple truck companies should be considered to ensure that a truck is available on the date of transport.

For element H, depending on the season in which the refurbishment of the ring is occurring, weather could play a big factor in terms of safety as well as possibly leading to the damaging of the ring itself. Because of this, the weather should be watched carefully and the transportation of the ring should only occur on a day when the conditions are such that it isn't too windy for the on-site crane to be used, it isn't raining or snowing and the ground isn't slippery so the workers who are transporting the ring don't get injured.

Elements B, D and F are below the shaded region and therefore do not require further action in order to handle the risks they present.

2.6 Cost Analysis of Final Design

In order to determine the cost that is associated with this final design, certain estimations had to be made. The cost is made up of 3 different sections. The first section is the actual cost of the material, including shipping. The second section is the cost of secondary material, such as fasteners and threaded rods. The last section is the cost of the labour and machining that will be required to put the entire structure together. TABLE VI is a summary of each individual cost and the overall total cost of the entire project, which is $16,826.10.

TABLE VI:
BREAKDOWN OF COST ANALYSIS OF FINAL DESIGN

Expenditure	Price per unit	Units	Total Cost
10”x10” Square Tubbing 20’	$776.40	11	$8,540.40
1” thick Steel Plate 4’x8’	$1254.4	4	$5,017.60
2 1/2” x6” Steel Flat Bar 12”	$192.12	4	$768.48
Shipping	$396.17		$396.17
18-8 Stainless Steel Threaded Rod, Right Hand 2-1/2"-4 Thread	$603.45	1	$603.45
Labour	$20.0	75	$1500
		Total	$16,826.10

The labour cost is broken down into 2 sections. The first section is the welding that will be required to build the structure. It was estimated that it would take 60s to complete a weld that is 1” long. Using this estimation, and calculating the total length of welding to complete the entire structure, it came out to 51 hours of welding work. The machining time would be quite less because only a few parts would be required to change shape, the rest is either cut to a smaller size or fastened together. Because of this an estimated time of 24 hours was used. This makes a total of 75 hours of total labour.

The prices for the steel are from Metals Depot directly [5] and the cost for the stainless steel threaded rod comes from the Mcmaster Carr [10] website.

The total cost of the support structure is very reasonable, given the large size of the operating ring.

2.7 Loading/Unloading Procedure

Aside from the design of the support structure, our client has also asked us to outline to ensure the safe and simple transportation of the operating ring. We will be using a tandem step deck to transport the operating ring, shown in Figure 54 [11]. The 3 ft height of the flatbed truck, plus the support structure and operating ring, will give a horizontal clearance of 1.9 ft and a vertical clearance of 2.08 ft to fit through the powerhouse door.



Figure 54: Tandem step deck flatbed truck

The loading procedure is outlined as follows.

1) Have the support structure on the powerhouse floor
2) Back the flatbed truck into the powerhouse
3) Lift and place support structure onto flatbed truck
4) Securely fix the support structure to the flatbed truck by way of clamps and straps
5) Using the overhead crane located in the powerhouse, lift and fix the operating ring at the approximate required angle
6) Lift and place the operating ring onto the support structure
7) Securely fix the operating ring to the support structure by way of chains or straps
8) Fix the inner diameter stop to the inner diameter of the operating ring by way of the adjustable threaded rod
9) Drive the truck just outside of the powerhouse
10) Remove the chains/straps and loosen the threaded rod holding the inner diameter of the operating ring
11) Using a different crane located outside, lift the operating ring from the support structure and place the operating ring flat (horizontally) on the ground (can use an elevated base)
12) Lift the support structure off the flatbed truck and down to the ground
13) Lift the operating ring and place the operating ring flat (horizontally) onto the flatbed truck
14) Securely fix the operating ring to the flatbed truck by way of clamps and straps

Since the operating ring's diameter (13'-11.25" ft) is wider than the limit of 8.53 ft imposed by the Highway Traffic Act, an over width permit must be obtained for transportation to the refurbishment facility. An unloading procedure will be followed that mirrors the loading procedure previously outlined.

3.0 Conclusion

Our client came to us with the project of moving the operating ring from the turbine unit #4 at the great falls power plant through the power house doors. The final design that we came up with consists of two parts. The first part was a structure that will hold the ring at a sufficient angle such that it will fit out of the power house doors. The second part was a process in which the structure and the ring will be transported out of the doors and then finally to the refurbishment center. First the structure itself will be placed on the truck using the overhead crane located in the power house. The truck that we will be transporting the ring on is a Tandem Step Deck truck. Once the structure is securely in place, the ring will then be picked up and placed safely down on the structure. The truck will then drive the structure and ring out of the power house doors, at which time the ring will be taken off of the structure and placed on the ground. The structure will then be taken off of the truck and placed on the ground as well. Lastly the operating ring will be picked up and placed flat on the truck bed and will be strapped down for transportation to the refurbishment centre.

The structure we designed consists of a bed that is supported by three triangle trusses that also hold the bed at an angle. The ring is placed on the bed and is held in place by three lower stops, which are located at the lower end of the bed, as well as chains that will be strapping the ring down to the bed. There is also an upper stop that is adjustable to match the inner diameter of the ring in order to maintain the rings shape.

The triangle trusses are made up of 10” squared hollow bars (1/4” thick) that are combined together to the triangle shape desired. The bed consists of 4’ by 8’ by 1” thick steel plates which are welded on top of the triangle truss structures. The three lower stops are three 2.5” thick by 6” by 12” steel plates welded to the bottom of the bed, curved to match the curvature of the ring. The adjustable upper stop is a 2.5” by 6” by 12” steel plate with a threaded rod attached to it to allow it to move back and forth. The dimensions of the entire structure are 135.55” tall, 154” wide and 97.35” deep. The angle of the bed of the structure is situated at 53.9°.

An estimation of the total cost of the project comes out to $16,826.10, which includes material costs as well as labour costs.

The requirements set out by our client were that we situate the ring such that it fits through the power house doors, that we maintain safe stresses in the ring during the transporting process, that the ring maintains its shape and that the overall design has a minimum factor of safety of two.

With the ring placed on our structure, and the structure and ring placed on the tandem step deck truck bed, there is a vertical clearance of 1.9 ft and a horizontal clearance of 2.08 ft. With this we have met the requirement of fitting the ring through the door.

The material of the operating ring is grey cast iron, which has a yield strength of 276 MPa. With the ring situated on the bed of the structure, and the truck moving at slow speeds, the stresses that occur in the ring range from 3.723 Pa and 2.4193 MPa. Since this range is less than 1% of the maximum stress that the ring can withstand before it starts to plastically deform we have met both the requirements that we maintain safe stresses in the ring and that the ring maintains its shape through the transportation process.

We considered two loading scenarios when running our stress analysis for the structure itself. The first loading condition was when the weight of the ring pressed down on the bottom stops where ring would normally touch them. The second loading scenario is when the weight of the ring is pressing down on the bottom stops at the where they are welded to the bed of the structure. In the former scenario the max stress was 33.77MPa, which occurred at the middle truss triangle where it meets with the bottom plate of the bed. In the latter scenario, the max stress occurred at the location of the bottom stops and was 114.48 MPa. The material used for the structure was structural steel which has a yield strength of 372.3 MPa. Since both of the loading scenarios have a max stress that is less than half of the yielding strength of the material of the structure, we have met the requirements to maintain a minimum factor of safety of 2. Also, seeing as how the structure itself can handle the weight of the ring, deformation of the ring caused by the failing of our structure will not occur. This further supports the fact that we have met the requirement of maintaining the shape of the ring.

Our design has met every requirement set out by our client in a straight forward manor. Our design can be used to not only to transport the ring out of the Great Falls generating station, but also can be used to transport the ring back into the power house when the refurbishment is complete. The structure itself, as well as the process for transportation,

can also be used to transport any of the other operating rings from any of the generating units (with the same size operating ring) in the Great Falls generating station as well. This shows that our design not only handles the problem given to us by the client, but also eliminates the need for using future resources to handle the same problem. By being readily movable and easy to handle, our design can not only be used at the Great Falls station, but has potential use in any of the other generating stations with operating rings of equivalent size. This shows that our design meets and exceeds our client's needs and should be implemented to handle this task.

References

[1] NSC, "National Safety Code for Motor Carriers," Council of Ministers Responsible for Transportation and Higway Safety, 2004.

[2] "Highway Traffic Act," Government of Manitoba, Decemeber 1988. [Online]. Available: http://web2.gov.mb.ca/laws/regs/pdf/h060-575.88.pdf. [Accessed 23 October 2013].

[3] "Overwidth Permits," Government of Manitoba, 2013. [Online]. Available: http://www.gov.mb.ca/mit/mcd/mcpd/owp.html. [Accessed 23 October 2013].

[4] M. Hydro, "Great Falls Generating Station," Manitoba Hydro, 14 October 2008. [Online]. Available: http://www.hydro.mb.ca/corporate/facilities/gs_great_falls.shtml. [Accessed 13 October 2013].

[5] "MetalsDepot - A500 Steel Square Tube," Metals Depot, 2012. [Online]. Available: http://www.metalsdepot.com/products/hrsteel2.phtml?page=sqtube&LimAcc=%20&aident. [Accessed 23 November 2013].

[6] I. W.W Grainger, "Coupling Nut," June 2013. [Online]. Available: http://www.grainger.com/product/Rod-Coupling-Nut-1JB43?s_pp=false. [Accessed 29 November 2013].

[7] M. Ashby, Materials Selection in Mechanical Design, 4th Edition, Oxford: Elsevier, 2010.

[8] Lovatt A.M., Shercliff H.R. and Withers P.J., "Material Selection and Processing," 25 02 2002. [Online]. Available: http://www-materials.eng.cam.ac.uk/mpsite/interactive_charts/strength-cost/NS6Chart.html. [Accessed 23 November 2013].

[9] SAFE Manitoba, "Cranes and Hoist - WSH Act," 2012. [Online]. Available: http://safemanitoba.com/regulations-view/Part%2023%20-%20Cranes%20and%20Hoists. [Accessed 28 November 2013].

[10] "Stainless Steel Threaded Studs and Rods," McMaster Carr, 2013. [Online]. Available: http://www.mcmaster.com/#standard-threaded-rods/=pj64eu. [Accessed 23 November 2013].

[11] "Landoll, Double-Drop, Step Deck, Tail Trailers," BLM Deck Division Inc., 2013. [Online]. Available: http://www.blmdeck.com/trailer.html. [Accessed 14 October 2013].

Appendices

Appendix A: Concepts Considered

Table of Contents

List of Figures A-4
List of Tables A-4
A.1 Initial Concepts A-5
A.1.1 Triangle Bed A-5
A.1.2 Magnetic Clamps A-6
A.1.3 Variable Arm Length A-6
A.1.4 Adjustable Flap Support A-7
A.1.5 Pivot Base Magnet Support A-8
A.1.6 Summary A-8
A.2 Concept Analysis A-9
A.2.1 Criteria Weighting Matrix A-9
A.2.2 Concept Screening and Scoring A-10

List of Figures

Figure A-1: Triangle bed design……... A-5
Figure A-2: Magnetic clamp design...……...A-6
Figure A-3: Variable arm length design.……...A-7
Figure A-4: Adjustable flap support design...……... A-7
Figure A-5: Pivot base magnet support design...……...……... A-8

List of Tables

TABLE A-1: CRITERIA WEIGHTING MATRIX...……...A-10
TABLE A-2: CONCEPT SCREENING MATRIX...……... A-11
TABLE A-3: CONCEPT SCORING MATRIX…...……... A-12

A.1 Initial Concepts

Our team came up with five potential support structure designs, named and numbered as follows:

1) Triangle bed
2) Magnetic clamps
3) Variable arm length
4) Adjustable flap support
5) Pivot base magnet support

These five designs are briefly explained in sections A.1.1 through A.1.5.

A.1.1 Triangle Bed

Design #1 suggests a sturdy truss design as a base. The operating ring will be supported by a triangle-shaped bed – the operating ring will then be clamped at four positions on this bed (Figure A-1). The clamps provide firm and adjustable supports that will securely fix the operating ring onto this proposed support structure. The structure will then be supported by a truss-like base that will be fixed at the required angle needed for the operating ring to fit through the powerhouse door.

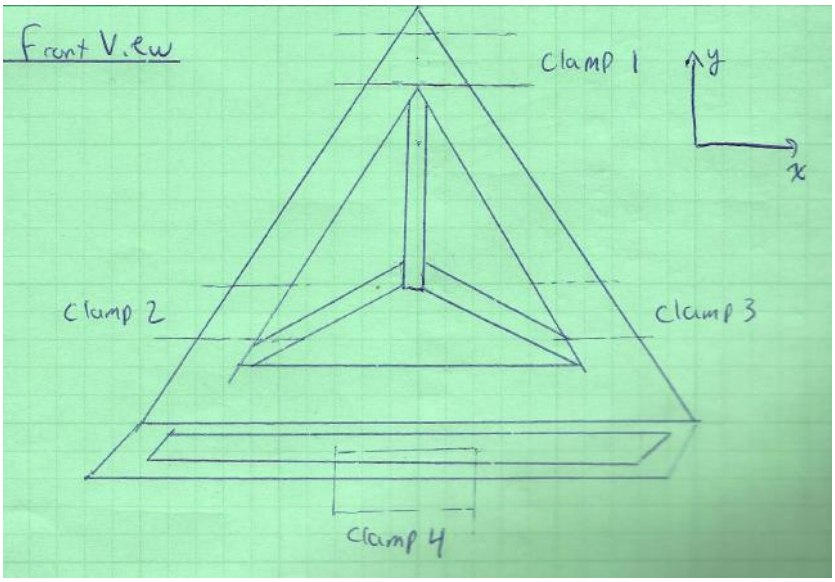

Figure A-1: Triangle bed design

A.1.2 Magnetic Clamps

Similar to the triangle bed design, design #2 incorporates a truss base fixed at the required angle. This new design incorporates clamps with strong magnetic ends that will be fixed to both the operating ring and the truss base (Figure A-2). The magnets allow for both freedom and sufficient support for the operating ring to lay on the support structure.

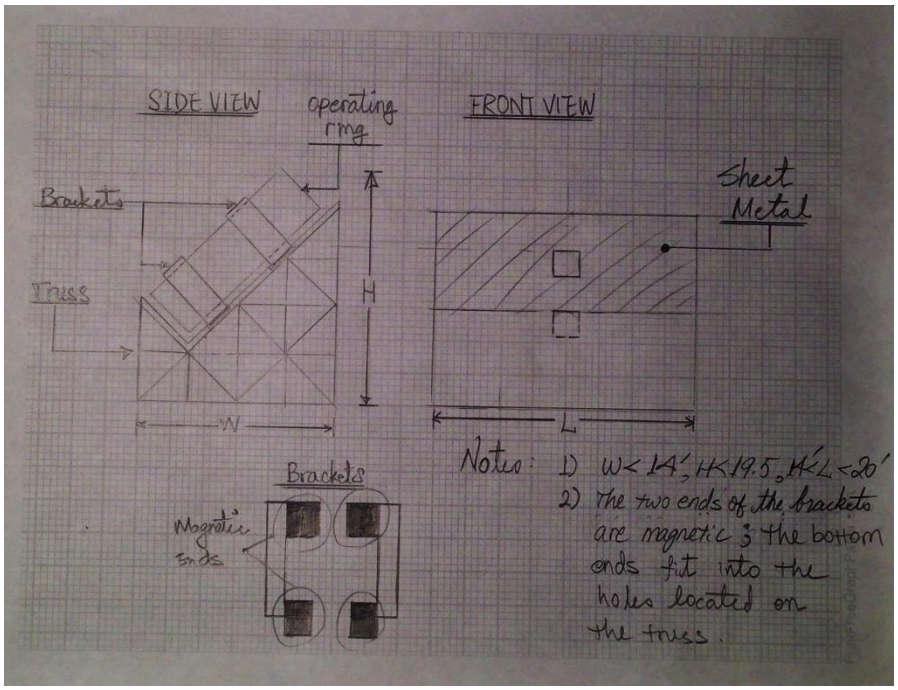

Figure A-2: Magnetic clamp design

A.1.3 Variable Arm Length

Design #3 has four clamps that are fixed along the inner diameter; each of these clamps are connected to arms of variable length (Figure A-3). The variable length allows for simple and adjustable support. These arms are then connected to a truss base fixed at the required angle for this project.

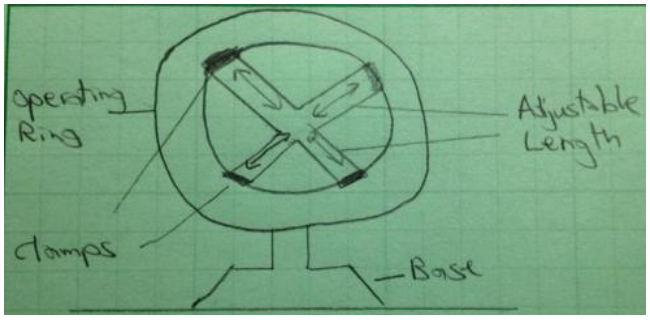

Figure A-3: Variable arm length design

A.1.4 Adjustable Flap Support

Like the first three designs, design #4 also uses a truss structure for its base. This design includes adjustable flaps that hold the operating in place on the support structure (Figure A-4). The flaps can be open and closed to a desired width to allow for loading, unloading, and the ability to fix the operating ring onto the support structure.

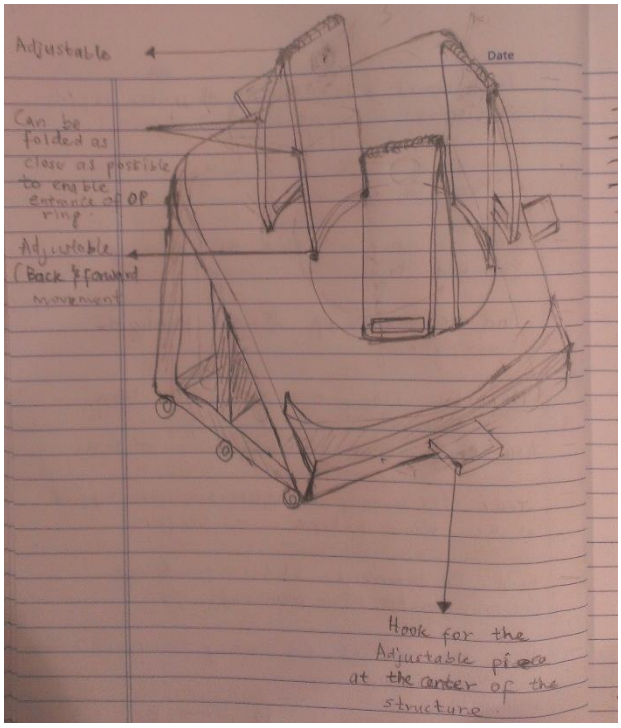

Figure A-4: Adjustable flap design

A.1.5 Pivot Base Magnet Support

For design #5, the operating ring would be fixed by an extending inner diameter apparatus that can adjust to the operating ring's inner diameter. Four magnets will give the operating ring extra support. The base has the ability to pivot so that the ring can be loading in horizontally and then can rotate to the desired angle for transportation (Figure A-5). Support beams can lock once the apparatus is at the desired angle, which adds structural support.

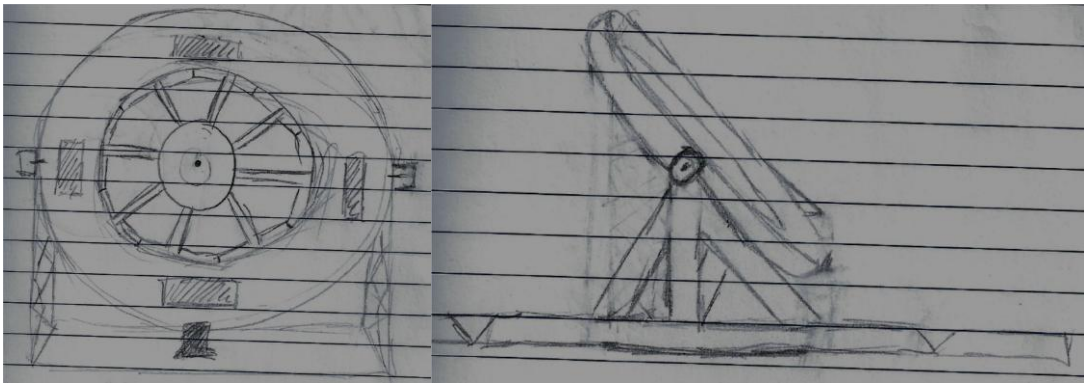

Figure A-5: Pivot base magnet support design

A.1.6 Summary

Although every design is unique, it is important to note several similarities between each design. Barring any drastic changes, these similar design details will be used in the final design.

1) Every design uses a truss-like structure as a base.
2) Each design's mechanism used to fix the operating ring onto to the support structure is adjustable in some way.
3) Each design can fix the operating ring at a certain angle if need be.

A.2 Concept Analysis

A preliminary analysis was performed on our five potential designs. Our preliminary analysis included a criteria weighting matrix, concept screening matrix, and a concept scoring matrix. Using these three methods of preliminary analysis will help the team narrow down our design concepts to one or two designs and whether or not the proposed designs meet the needs and design criteria the client requires.

A.2.1 Criteria Weighting Matrix

The team established five criteria that our team must take into consideration when coming up with possible designs. Each of these criterion was then compared to one another and ranked in order of importance. The design criteria are summarized below.

6) **Cost**: Includes labor, materials, truck rental, assembly, etc.
7) **Ease of Loading**: Degree of difficulty of loading/unloading scenarios, which may include, but are not limited to, loading of operating ring onto support structure, and support structure onto flatbed truck. Different loading scenarios may arise depending on which design the team decides to choose.
8) **Manufacturability**: Complexity of building the support structure and any necessary components.
9) **Ease of Handling**: Includes factors such as size, weight, shape and compactness of support structure.
10) **Adjustability**: The ability for the support structure to adjust its components (e.g. clamps, pulleys, magnets, etc.) to adapt to the operating ring.

Ranking the design criteria helps our team decide where the emphasis should be made on certain aspects of our design. Table A-1 illustrates the criteria weighting matrix.

TABLE A-1:
CRITERIA WEIGHTING MATRIX

	Criteria	A Cost	B Ease of Loading	C Manufacturability	D Ease of Handling	E Adjustability
A	Cost		B	A	A	E
B	Ease of Loading			B	B	E
C	Manufacturability				C	E
D	Ease of Handling					D
E	Adjustability					
	Total Hits	2	3	1	1	3
	Weightings	0.2	0.3	0.1	0.1	0.3

Adjustability and ease of loading of the support structure, both given weightings of 30%, are the most important design criteria that should be taken into consideration. Cost follows, with a weighting of 20%.

A.2.2 Concept Screening and Scoring

After weighing the design criteria, each of our five proposed design concepts can now be evaluated on how well they meet each design criteria. The other four designs are now compared to a reference design (chosen by the team) on which design meets each design criteria better. Our client recommended that we choose a design that was "middle ground" – i.e. satisfied all the design criteria moderately compared to the other four designs. Design #3, variable arm length, was chosen by our team to be the reference design. This process is called concept screening; Table A-2**Error! Reference source not found.** summarizes the esults of the concept screening.

TABLE A-2:
CONCEPT SCREENING MATRIX

	Concept Variants				
Selection Criteria	1) Triangle Bed Design	2) Magnetic Clamps	3) Variable Arm Length (ref)	4) Adjustable Flap Support	5) Pivot Base Magnet Support
Cost	+	-	0	+	-
Ease of Loading	+	+	0	-	+
Manufacturability	+	+	0	0	-
Ease of Handling	-	-	0	+	+
Adjustability	-	-	0	0	+
PLUSES	3	2	0	2	3
SAMES	0	0	5	2	0
MINUSES	2	3	0	1	2
NET	1	-1	0	1	1
RANK	1	3	2	1	1
CONTINUE?	Yes	No	No	Yes	Yes

The results of our concept screening matrix yielded three top designs, which are the triangle bed, adjustable flap support and pivot base designs. These three designs will then be further analyzed into a concept scoring matrix in hopes of narrowing our design choices to one or two designs.

Combining the criteria weighting and concept screening allows us to assign score values to the design concepts. The concept scoring process enables us to put a quantifiable number to each design and therefore see which designs satisfy the client's needs and established design criteria. Each design is rated against each design criteria from 1 to 5, 1 being the lowest and 5 being the highest. This rating is then multiplied by the weight established in Table A-1. These scores are then added; a higher total score is favorable. The concept scoring matrix is depicted in Table A-3.

TABLE A-3:
CONCEPT SCORING MATRIX

		Concepts					
		1) Triangle Bed		4) Adjustable Flap Support		5) Pivot Base Magnet Support	
Selection Criteria	Weight	Rating	Weighted Score	Rating	Weighted Score	Rating	Weighted Score
Cost	20%	5	1.0	4	0.8	3	0.6
Ease of Loading	30%	3	0.9	3	0.9	5	1.5
Manufacturability	10%	4	0.4	3	0.3	2	0.2
Ease of Handling	10%	3	0.3	3	0.3	4	0.4
Adjustability	30%	2	0.6	4	1.2	5	1.5
	Total Score	3.2		3.5		4.2	
	Rank	3		2		1	
	Continue?	No		Develop		Develop	

The results of the concept scoring matrix show that the pivot base magnet support has the highest score of 4.2. This score of 4.2 was largely due to the fact we gave design #5 a rating of 5 for ease of loading and adjustability, the two most heavily weighted design criteria.

Our team decided that although design #5 was rated as the best design, the rating design #4 was given also merits an in-depth analysis. Design #4 was given a high rating for adjustability and cost, which is very important to consider in our design. The results of the concept screening and scoring show that the adjustable flap support and pivot base magnet support designs satisfy the design criteria enough to proceed with a future thorough analysis.

Appendix B: Suppliers

Table of Contents

List of Figures A-15

B.1 Material Suppliers A-16

B.2 List of Flatbed Truck Transportation Companies A-17

List of Figures

Figure B-1: Additional material benefits..……..……. A-16

B.1 Material Suppliers

Figure B-1 [10] lists additional benefits to our selected material for our support structure.



Figure B-1: Additional material benefits

B.2 List of Flatbed Truck Transportation Companies

The suppliers in the following list are shipping companies with tandem step deck trucks available for possible use.

- TransX
- Big Freight
- Mother Load
- Patco
- The GTI Group

  Other companies can be used; the above are just suggestions given the initial and final destination.