University of Manitoba

National Research Council Canada | Conseil national de recherches Canada

Canada

Team 6

Final Design Report

BIOE 4950: Biosystems Engineering Design 4

NRC – Automated Compost Mixing Tool

Instruction Team: Dr. Natasha Jacobson
Dr. Don Petkau
Ms. Aidan Topping
Mr. James White

Company Contacts: David Chuang
Michael Snowdon
Dash Yetirajula
Sarah Low Ying

Report Prepared By: Ayat Al-Fakih
Danika Odaisky
Karan Patel
Sam Ramos

Date of Submission: April 2, 2025

Executive Summary

The National Research Council (NRC) requires an automated compost stirring device to replace the current manual process used in its biodegradability testing of plastics. Lab technicians spend four hours each week manually mixing compost in 48 glass vessels, which is labor-intensive, time-consuming, and causes ergonomic hazards to technicians. The objective of this project is to automate the process by ensuring uniform mixing, reducing labor, and maintaining the integrity of the glass vessels used for testing.

The design combines internal and external mechanisms for effective operation. The internal mechanism features a segmented auger to break compost clumps, a wiper blade to scrape compost from vessel walls, and a grate-holding sleeve to secure the metal grate and prevent scratches on the glass vessel, enabling mixing of compost with varying consistencies. The external mechanism consists of a motor with adjustable speeds, a secure clamping system, and a user-friendly control panel allowing a single operator to set up and mix all 48 vessels in under four hours.

Users set up the device by assembling internal components, placing the vessel in the frame, lowering the motor-lid system, and activating the mixer via a speed-adjustable control, reducing manual effort to a simple, ergonomic process.

The verification process confirmed the design's success in achieving goals for durability, safety, cost, ease of use, and size. The device operates quietly and supports single operator use, significantly reducing manual effort while meeting key safety and operational requirements. Tests for compost uniformity and spillage tolerance require further evaluation due to clamping challenges at high speeds. This offers areas for engineering recommendations, such as improving automation and user-friendliness. The device improves the efficiency and reliability of biodegradability testing while reducing strain on lab technicians.

Table of Contents

Executive Summary ii

List of Figures v

List of Tables vii

1.0 Project Introduction 1

1.1 Background 2
1.1.1 Biodegradation Testing Standards and Laboratory Procedures 2
1.1.2 Bioplastic Composted Test Materials 2
1.1.3 Material Composition of NRC Mixing Utensils 3

2.0 Problem Definition 3

2.1 Design Functions and Client Needs 4

2.2 Technical Specifications 5

2.3 Design Constraints 6

2.4 Client Deliverables 6

3.0 Design Solution 7

3.1 Internal Mechanism 11

3.2 External Mechanism 13
3.2.1 Electronic Control System 13
3.2.2 Vessel Clamping Mechanism 17
3.2.3 Shaft-Motor Attachment 21

4.0 Verification Procedure 23

4.1 Material Specifications (S1.1 – S1.5) 24

4.2 Post-Mixing Compost Specifications 24
4.2.1 Post-mixing compost uniformity (S2.1) 24
4.2.2 Compost spillage tolerance (S2.2) 27

4.3 Mixing Space Specifications 28
4.3.1 Mixing blade length (S3.1) 28
4.3.2 Mixing diameter (S3.2) 29

4.4 Electrical Specifications 30
4.4.1 Agitation mechanism noise output (S4.1) 31
4.4.2 Variability in speed (S4.2) 31
4.4.3 Power use (S4.3) 32

4.5 Manufactured Cost Specifications (S5.1) 33

4.6 Number of Operators Specifications (S6.1) 33

4.7 Physical Specifications 34
4.7.1 Weight (S7.1) 34
4.7.2 Size (S7.2) 34

5.0 Sustainability 36

6.0 Conclusion 39

6.1 Summary 39

6.2 Limitations 40

6.3 Recommendations 41

Acknowledgements 43

7.0 References 44

Appendix A-1

Appendix A: Instruction Manual and Safe Work Procedures A-1

Safety and ergonomic features A-1

Set up prior to beginning 90-day experiment: A-2

During 90-day experiment: A-4

After completing 90-day experiment A-6

Appendix B: Project-Specific Material B-1

B.1 Current Market Designs of Compost Tools B-1

B.2 Internal Mechanism Prototypes B-2

B.3 Technical Specifications of Electrical Components B-3

B.4 Brushless DC Motor Selection Rationale B-4

B.5 Methods for Determining Torque and Speed Requirements B-5

B.6 Equations for S2.1 B-5

B.7 Ideal Large Scale Manufacturing Processes for Design Components B-6

B.8 Manufacturing Drawings B-7

Appendix C: Bill of Materials C-1

Appendix D: Technical Datasheets for Internal Components D-1

List of Figures

Figure 1 – Compost media vessel 1
Figure 2 – Closed compost glass media vessel 7
Figure 3 – Open glass vessel 8
Figure 4 – Glass vessel removed from base structure 8
Figure 5 – Bare glass vessel 8
Figure 6 – Grate-holding sleeve inside glass vessel 8
Figure 7 – Grate-holding sleeve and grate with center rod inside glass vessel 8
Figure 8 – Mixing blade inserted into glass vessel through center rod 8
Figure 9 – Glass vessel filled with 2/3rd compost media 9
Figure 10 – External mechanism structure without the glass vessel system (design solution frame). The transparent lid allows for a visual of the shaft attachment. 9
Figure 11 – Overview of the design solution components. The components in red comprise the internal mechanism; components not in red comprise the external mechanism; components in blue comprise the motor-blade attachment; components in orange comprise the motor and controls; components in grey and black comprise the vessel clamping mechanism. 10
Figure 12 – Internal mechanism's components 11
Figure 13 – Mixing blade features 12
Figure 14 – Silicone coated wiper blade 12
Figure 15 – Grate-holding sleeve features 13
Figure 16 – Grate-holding sleeve coated with a silicone dip 13
Figure 17 – Circuit diagram of the automated compost mixer electrical system 14
Figure 18 – Hardware circuit of the automated compost mixer electrical system. Adapted from the motor driver's user manual [13, pp. 16]. Colored boxes attached to the driver pins showcase additions to the circuit, where each color resembles the color of the wire it uses to attach. 15
Figure 19 – Placement of the metal control box in the overall system 16
Figure 20 – Placements of the electrical control components to the outside of the metal control box 17
Figure 21 – Placement of the motor driver and power supply within the metal control box 17

Figure 22 – Internal components of the metal control box 17
Figure 23 – Motor-lid system applying vertical compression for clamping mechanism 18
Figure 24 – Rail system applying structural support for clamping mechanism 18
Figure 25 – Pressed limit switch position 19
Figure 26 – Vessel base coated on the inside with silicone 20
Figure 27 – Lid clamping mechanism overview where the arrow showcases the movement of the motor-lid system 20
Figure 28 – Bottom-part of the lid protective insert 21
Figure 29 – Manufactured form for top-part of the lid 21
Figure 30 – 3D printed form for top-part of the lid 21
Figure 31 – Hollow mixing blade shaft with compatible motor drive hex attachment 22
Figure 32 – Diagram indicating mixing blade length measurement 29
Figure 33 – Diagram indicating mixing blade length measurement 30
Figure 34 – Diagram indicating mixing length and width measurements of the base plate 35

List of Tables

Table 1. Qualitative and quantitative target technical specifications and verification procedures. 5
Table 2. Project constraints and implications 6
Table 3. Technical specifications and passing criteria for each verification procedure 23
Table 4. Mixing verification results for bead distribution from the bottom (blue beads) 26
Table 5. Mixing verification results for bead distribution from the bottom (orange beads) 26
Table 6. Mixing verification results for bead distribution from the top (blue & orange beads)... 26
Table 7. Compost spillage tolerance measurements and results..... 28
Table 8. Mixing blade length measurement..... 29
Table 9. Mixing blade diameter measurement..... 30
Table 10. Speed variability verification results 32
Table 11. Base plate size verification results..... 35
Table 12. GPM-5 scored elements 37

1.0 Project Introduction

The National Research Council of Canada (NRC), the Government of Canada's largest research and development organization, plays a leading role in advancing the country's science, technology, and innovation ecosystem [1]. Specifically, the Advanced Manufacturing Research Facility (part of the Automotive Surface Transportation Research Centre) in Centreport, Manitoba, focuses on developing sustainable technologies that support a circular economy–minimizing waste and maximizing recycling and composting.

To support these efforts, the facility conducts biodegradation studies of bioplastics using compost in an open system respirometer. A crucial part of this research involves mixing compost media, but the process is labor-intensive, requiring manual stirring for long periods.

In NRC's ongoing 90-day projects, the compost media in 48 glass vessels, shown in Figure 1, are manually stirred once a week using kitchen utensils to ensure even moisture distribution and prevent channeling or clumping of compost [2]. This process causes hand and wrist ergonomic issues for lab technicians and consumes four hours of their time each week.

The compost media vessel consists of a glass container, a perforated screen with a central tube that always remains within the vessel, and a sealed top secured with compression springs and wingnuts.

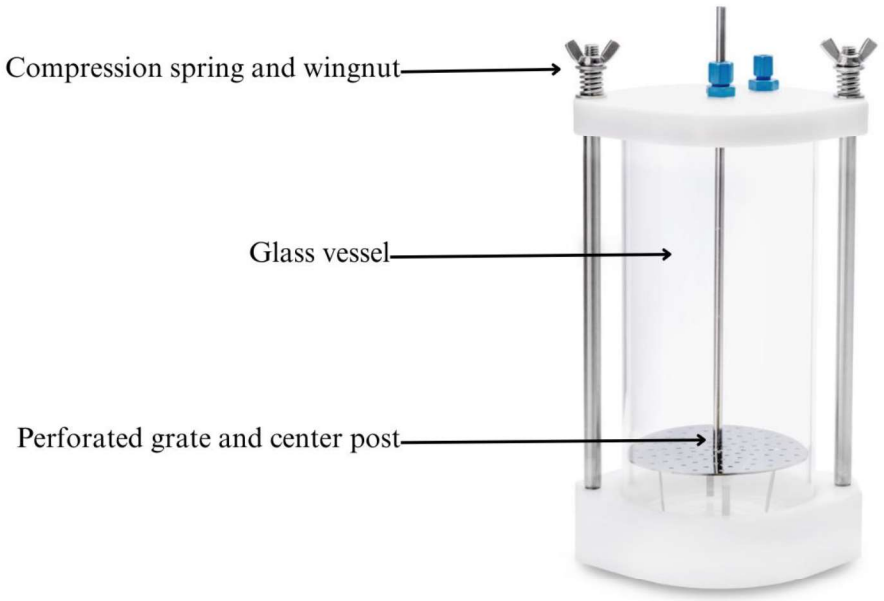

Figure 1 – Compost media vessel

Prolonged use of hand tools can cause fatigue, chronic musculoskeletal injuries, blisters, and restricted blood flow due to soft tissue compression and friction caused by forceful grips [3]. The vessels' narrow shape, shown in Figure 1, forces awkward and repetitive wrist motions, that can lead to carpal tunnel syndrome, a concern raised by the technicians [4].

NRC tasked the team with designing and building an automated device to mix compost media of varying consistency. The device will streamline and improve the biodegradation research process by addressing the time commitment, effort required, and repetitive nature of the task.

1.1 Background

Mixing compost media is essential in NRC's biodegradation research of bioplastics. For this reason, the team requires an understanding of the current standards, procedures, and tools involved in the mixing process. This background section outlines key aspects of biodegradation testing, including laboratory practices, composted materials, and the tools currently used by NRC for compost mixing. It also reviews existing mixing tools used in various applications and evaluates their suitability for NRC's requirements.

1.1.1 Biodegradation Testing Standards and Laboratory Procedures

The NRC laboratory follows the ASTM D5338-15 standard for aerobic degradation of plastic materials to assess biodegradability of test samples. This standard requires measuring the carbon converted to CO_2 over 90 days in a vessel filled one-third to two-thirds with compost inoculum, leaving sufficient headspace to model thermophilic aerobic composting facilities accurately [5]. To achieve this, the testing environment maintains vessel temperature at 58° C and conducts weekly mixing to prevent tunneling (formation of air channels within the compost) and ensure uniform moisture distribution throughout the compost media [5]. For this process, the lab uses a respirator system and compost vessels supplied by ECHO Instruments to simulate thermophilic aerobic composting conditions and meet the required standards. The vessels are sealed with ports for gas flow and software monitors the O_2 and CO_2 concentrations, as well as temperature, humidity, and pressure to ensure precise control and measurement during testing [2].

1.1.2 Bioplastic Composted Test Materials

The NRC facility uses biodegradable (i.e., starch-based (TPS), cellulose-based, PLA, PHAs, bio-PBS) and nonbiodegradable (i.e., bio-PP, bio-PE, bio-PET, bio-PA, bio-PC, PEF) bioplastics as test materials in compost. These test materials can come in the form of pellets, sheets or films, or

large plastic particles cut into various shapes and sizes. Specifically, the ASTM D5338-15 standard indicates a maximum surface area of 2 cm^2 for the test material samples [2]. If the test materials exceed this size, biodegradation may take slightly longer. Regardless of size, weekly mixing of compost facilitates the biodegradation of these test materials. Typically, the pellets are fully biodegraded by the last two weeks of the experiment.

1.1.3 Material Composition of NRC Mixing Utensils

NRC's current practices of mixing compost rely on manual stirring, with several hand mixing tools. One such tool is the Bel-Art™ SP Scienceware™ Stainless-Steel Lab Spoon, which offers high corrosion resistance and durability under heavy use [6]. Stainless steel's high tensile strength and low maintenance requirements make it an ideal material for compost mixing tools [6]. The compost vessel NRC utilizes in their research is composed of stainless-steel components due to these advantageous properties.

Another tool in use is a silicone baking spatula for mixing. Silicone is highly resistant to corrosion, especially in moist environments, and adheres securely to stainless steel [6]. Both materials are non-biodegradable and exhibit high heat resistance and non-scratching properties, providing an optimal balance of strength and flexibility for long-lasting compost mixing [6].

Manual compost mixing, while effective, is prone to inconsistency. Automation reduces operator input and improves mixing consistency providing accurate research outcomes. Current market tools explored range from manual tools to fully automated systems, including drill-operated mixers, KitchenAid devices, and power ratchets. The detailed review of these options for their suitability in addressing the NRC's compost mixing needs is found in Appendix B, section B.1.

The market tools explored are not specifically tailored to the unique requirements of compost mixing in biodegradation research. Therefore, a custom automated solution is necessary to meet NRC's specific goals and enhance the mixing process and research workflow.

2.0 Problem Definition

The NRC needs a compost mixing device that can efficiently mix 48 vessels weekly while reducing ergonomic hazards. The team collected information on the design functions, client needs, target specifications, constraints, and client deliverables to define the problem fully. These

elements guided the design process and were used to verify the project's success by the end of the project timeframe.

2.1 Design Functions and Client Needs

The team met and discussed the project with all stakeholders to ensure the views of the head researcher, technical lead, and technicians using the design on a regular basis were all considered in the design process. The requirements communicated by the client and developed by the team are listed below.

- The design must mitigate or eliminate the ergonomic hazards associated with the current mixing process by introducing automation and considering ergonomic factors and adjustability to accommodate users of different sizes in the design process.
- The design must mitigate safety hazards to ensure safe operation by the user.
- The design must mix 48 compost samples in under 4 hours on a weekly basis to break up tunnelling and ensure uniform moisture distribution.
- The design must accommodate compost volumes of 0.67-1.25 L with consistencies ranging from dry and granular to wet and sticky.
- The design must integrate with the existing respirometer and monitoring system without damaging the vessels, interfering with air flow, or pushing large amounts of sample through the perforated metal base.
- The design must minimize or eliminate spillage and cross contamination between vessels during the mixing process.
- The material and geometry of mixing utensils or devices must be suitable for the composting environment and must not corrode, biodegrade, or interfere with microbial activity.
- The mixing device must be able to be easily sanitized with water every 90 days to eliminate microbes after each experiment cycle.
- The design should use electric power as compressed air is only available to secure the vessel during mixing.
- The entire design should fit and be stored withing the space available on the table provided in the lab.

2.2 Technical Specifications

The initial target specifications of the design are listed in Table 1. The team developed the target specifications and criteria using the design requirements communicated by the client and the specifications of the existing respirometer and vessel system.

Table 1. Qualitative and quantitative target technical specifications and verification procedures

Spec.	Description	Criteria	Verification Method
S1 – Material Specifications			
S1.1	Corrosion resistant material	Material properties are suitable	Sect: 4.1
S1.2	Non-antimicrobial material	Material properties are suitable	Sect: 4.1
S1.3	Non-biodegradable material	Material properties are suitable	Sect: 4.1
S1.4	Heat resistant material	>58 °C	Sect: 4.1
S1.5	Material hardness	< 5.5 (Mohs scale) [12]	Sect: 4.1
S2 – Post-Mixing Compost Specifications			
S2.1	Post-mixing compost uniformity	<10 % Difference at 3 depths	Sect: 4.2.1
S2.2	Compost spillage tolerance	≤ 0.009 g	Sect: 4.2.2
S3 – Mixing Space Specifications			
S3.1	Mixing blade length	5.91 – 7.87 in	Sect: 4.3.1
S3.2	Mixing diameter	3.54 – 4.50 in	Sect: 4.3.2
S4 – Electrical Specifications			
S4.1	Agitation mechanism noise output	< 87 dBA	Sect: 4.4.1
S4.2	Variability in speed	30 – 60 rpm	Sect: 4.4.2
S4.3	Power use	≤ 120 V ± 5 V ≤ 13 A ± 0.6 A	Sect: 4.4.3
S5 – Cost Specifications			
S5.1	Manufactured cost	< $6500 CAD	Sect: 4.5
S6 – Operational Specifications			
S6.1	Number of operators	1 Person	Sect: 4.6
S7 – Physical Specifications			

Spec.	Description	Criteria	Verification Method
S7.1	Weight	< 25 kg	Sect: 4.7.1
S7.2	Size (length x width)	74.8 x 35.4 in	Sect: 4.7.2

2.3 Design Constraints

The constraints of this project and the implications of these limitations are summarized in Table 2. The project timeframe (C1) is limited by the Winter 2025 term end date, while the remainder of the constraints were determined through consultation with the client.

Table 2. Project constraints and implications

Constraint	Description	Implications
C1	Project timeframe restricted to 6.5 months	Progress is monitored on Gantt chart to ensure the project is completed within the timeframe
C2	Project budget limited to $6000 provided by client and $500 provided by UofM	Resources and equipment for building and testing will be sourced from the university where possible to reduce costs
C3	The design must not introduce hazards to the operator	Safety features and interlocks will be included in the design
C4	The design must reduce the ergonomic hazards caused by the current process	Ergonomic strains will be eliminated where possible according to the Canadian Centre for Occupational Health and Safety
C5	Design must not use compressed air as a power source	The design will use electric power either through standard wall outlets or batteries
C6	Design must meet ASTM D5338 and ASTM D6400 standards	The standards will be reviewed throughout the design process to ensure compliance

2.4 Client Deliverables

The following deliverables have been identified based on the client's requirements and expectations for the project outcomes. These deliverables will be delivered with this report.

- CAD model, all detailed engineering drawings of manufactured and assembled parts, including a complete bill of materials.
- A viable physical prototype includes the motor and control system, container restraint, power source, and one mixing blade.

- Demonstration of the functionality of the physical prototype in the NRC lab with compost media in vessels.
- A manual detailing the device specifications and description, usage instructions, troubleshooting information, and safety precautions.

Having established the design specifications, constraints, and client deliverables, the team's next step was to translate these requirements into a design solution that ensures functionality, efficiency, and user-friendliness.

3.0 Design Solution

An automated compost mixer was developed, with an understanding of the project needs and constraints. The main objective of the design solution is to eliminate the manual laborious task of mixing compost media within a glass vessel to enhance the research process. The design solution incorporates a DC motor to drive a mixing blade, ensuring thorough mixing of the compost media within the glass vessel. To understand the overall design solution system's functionality, the general standard operating procedure is detailed below.

At the start of a 90-day research project, the operator begins with a clean and closed compost media vessel as shown in Figure 2.

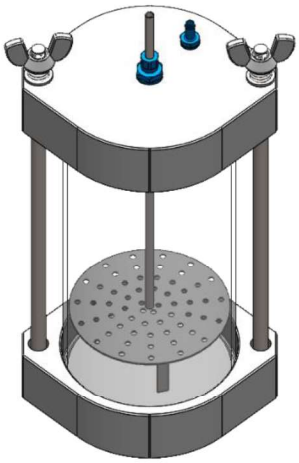

Figure 2 – Closed compost glass media vessel

The compression wingnut is loosened and removed to lift the lid leaving an open glass vessel, Figure 3. The glass vessel is removed from the frame, Figure 4, and the center rod with the metal grate is removed from within the glass vessel, Figure 5, leaving an empty and open glass vessel.

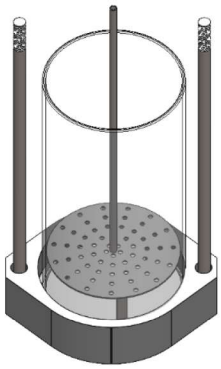

Figure 3 – Open glass vessel

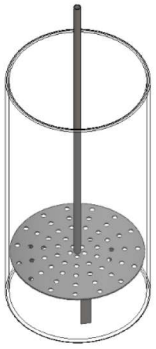

Figure 4 – Glass vessel removed from base structure

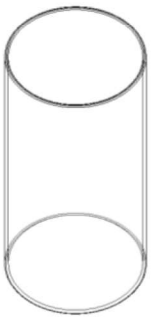

Figure 5 – Bare glass vessel

The grate-holding sleeve is inserted at the bottom of the glass vessel, Figure 6, and water is poured into the glass to moisten the compost over the duration of the 90-day project. Then the center rod with the metal grate is placed back in the vessel and positioned inside the sleeve Figure 7. The water fills approximately half the distance between the bottom of the sleeve to the bottom of the grate. The mixing blade slides through the center rod and sits inside the vessel, Figure 8. These components remain inside the glass vessel throughout the duration of the 90-day research project. This procedure is replicated for the 48 glass vessels, and they are all then filled with 2/3 of compost media and plastic pieces according to biodegradation testing protocol.

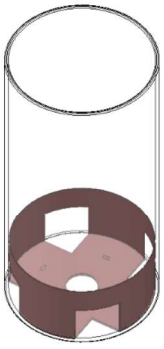

Figure 6 – Grate-holding sleeve inside glass vessel

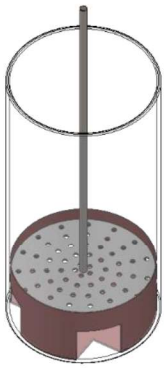

Figure 7 – Grate-holding sleeve and grate with center rod inside glass vessel



Figure 8 – Mixing blade inserted into glass vessel through center rod

The compost filled glass vessel, shown in Figure 9, is placed inside the design solution frame, Figure 10. The motor-on-lid system is then vertically lifted by a linear rail to enclose the glass

vessel. This system enables the seamless replacement of glass vessels, supporting the research process, allowing sequential mixing of 48 glass vessels in a single session.



Figure 9 – Glass vessel filled with 2/3rd compost media

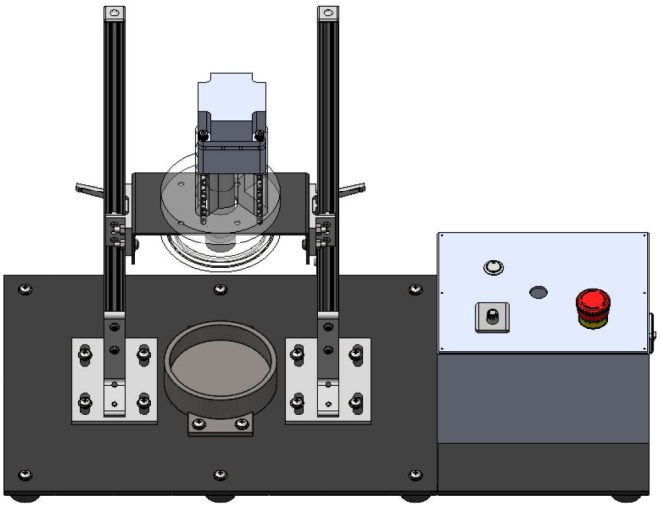

Figure 10 – External mechanism structure without the glass vessel system (design solution frame). The transparent lid allows for a visual of the shaft attachment.

After each session of mixing compost media in the 48 vessels, the mixing blade remains in each glass vessel as the vessels are returned to their original base and enclosed by the lid and

compressive wingnuts to prepare them to be put back into a respirometer. At the conclusion of the 90-day project, the compost volume reduces to approximately one-third of the vessel. The mixing blade and grate-holding sleeve, which remained in the vessels during the duration of the project, are removed, and the compost media disposed of. The glass vessel, mixing blade, and grate-holding sleeve are washed using water and dried. The use of only water helps prevent cross-contamination in subsequent projects. The process repeats to initiate the next research cycle.

A detailed instruction manual and safe work procedures are found in Appendix A. Additionally, a labeled model illustrating the terminology of all the design solution's components is found in Appendix A.

This design solution is divided into two distinct sections: the internal mechanism and the external mechanism, as shown in Figure 11.

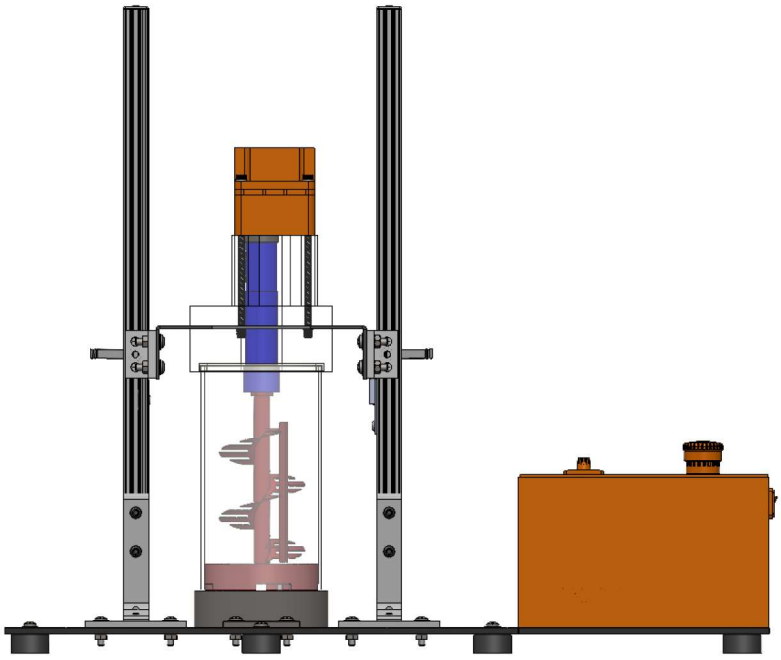

Figure 11 – Overview of the design solution components. The components in red comprise the internal mechanism; components not in red comprise the external mechanism; components in blue comprise the motor-blade attachment; components in orange comprise the motor and controls; components in grey and black comprise the vessel clamping mechanism.

The internal mechanism includes the blade, and the grate-holding insert, which sit inside the vessel, while the external mechanism encompasses all structural components outside the vessel which encase the internal mechanism, as well as the electronic box. When placed on top of the

glass vessel, the external mechanism attaches to the shaft of the internal mechanism, enabling the blade to rotate and mix the compost media.

3.1 Internal Mechanism

The internal mechanism of the automated compost mixer operates within the glass vessel, mixing compost media of varying consistencies. As illustrated in Figure 12, the internal mechanism consists of the grate-holding sleeve and the mixing blade that seamlessly fit within the glass vessel.

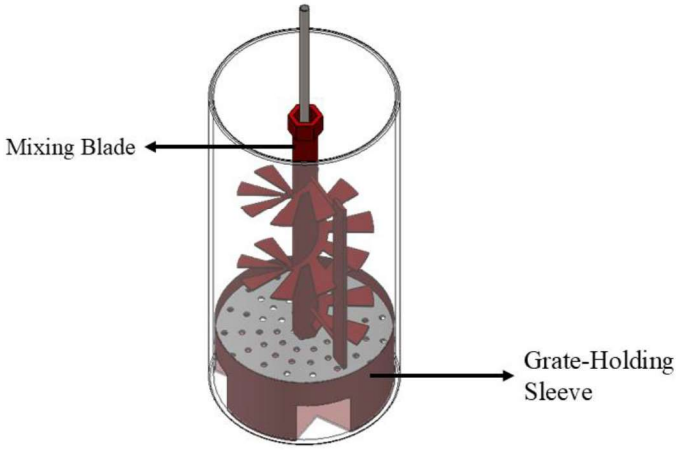

Figure 12 – Internal mechanism's components

The mixing blade, shown in Figure 13, features a 4-inch in diameter segmented auger-shaped flight welded to a hollow shaft, designed to efficiently lift and break compost clumps. The segmented flights minimize surface area to prevent compost accumulation, promoting the redistribution of compost in the vessel and enhancing vertical mixing. Sealed bearings within the shaft eliminate friction with the center rod and metal grate, ensuring proper alignment and smooth rotation. Additionally, a wiper blade is welded to the auger-shaped mixer and coated in silicone, shown in Figure 14, to scrape the glass walls without introducing additional friction. A hexagonal nut, welded to the top of the hollow shaft, serves as the attachment point for the motor.

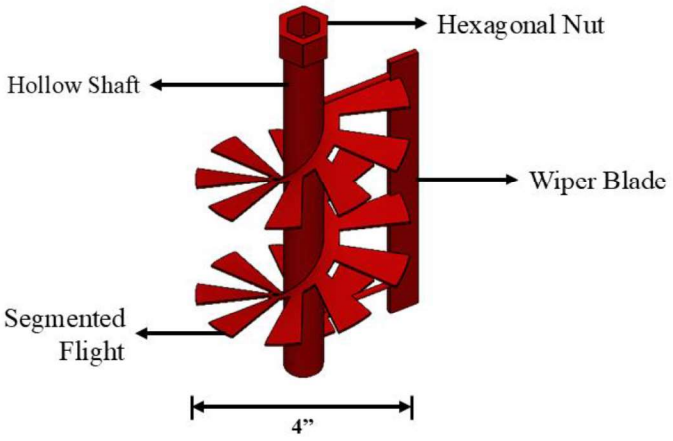

Figure 13 – Mixing blade features



Figure 14 – Silicone coated wiper blade

The overall mixing blade design process involved testing and refining four prototypes, with each iteration improving the mixing process and addressing specific challenges. A summary of the mixing blade prototypes, including their overview, features, and design performance, is provided in Appendix B, Table B2. The final selected design, Prototype 4, combines the best features from earlier prototypes and introduces modifications for better performance.

The internal mechanism also includes the grate-holding sleeve, shown in Figure 15, which prevents the metal grate from spinning with the mixing blade and scratching the internal surfaces of the glass vessel. For the prototype, the sleeve was 3D printed out of a flexible material, Thermoplastic Polyurethane (TPU), and coated with a layer of silicone, shown in Figure 16, to increase friction with the glass and prevent biodegradation, allowing the sleeve to remain in the vessel for the 90-day project. The sleeve features four windows to allow the operator to observe and monitor the water levels. Additionally, the sleeve features four rectangular inserts for the metal grate’s four feet to sink into and provide additional grip.

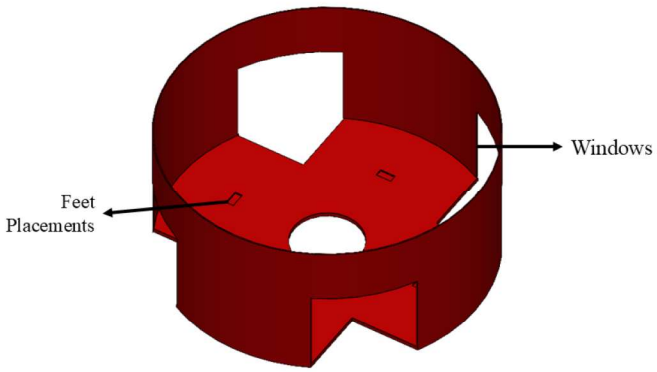

Figure 15 – Grate-holding sleeve features



Figure 16 – Grate-holding sleeve coated with a silicone dip

For future prototype fabrication, the grate-holding sleeve should ideally be manufactured using injection molding to achieve its desired shape. Injection molding is a manufacturing process where molten material, in this case, a non-biodegradable polymer, is pushed into a mold under high pressure. As it cools, it hardens into the desired shape.

The internal mechanism integrates with the external mechanism to deliver consistent and reliable compost mixing while adhering to the constraints of the glass vessel.

3.2 External Mechanism

The external mechanism includes all components that remain outside the glass vessel, as shown in Figure 11. These components consist of the electronic control system, the vessel clamping mechanism, and the shaft-motor attachment mechanism. The purpose of the external mechanism is to provide structure and supply steady and stable rotational energy to the internal mechanism.

3.2.1 Electronic Control System

The electronic control circuit serves as the system controller, managing input processing and output control. As shown in Figure 17, the core of the electronic control system is a brushless DC motor paired with its digital driver. The system is further supported by a gearhead parallel shaft, a power supply (AC/DC adapter), an on/off switch, a safety switch, an external speed potentiometer, a limit switch, and a run switch with an LED indicator light. The specific models and types of these components are detailed in the electronic control system Bill of Materials, found in Appendix C.

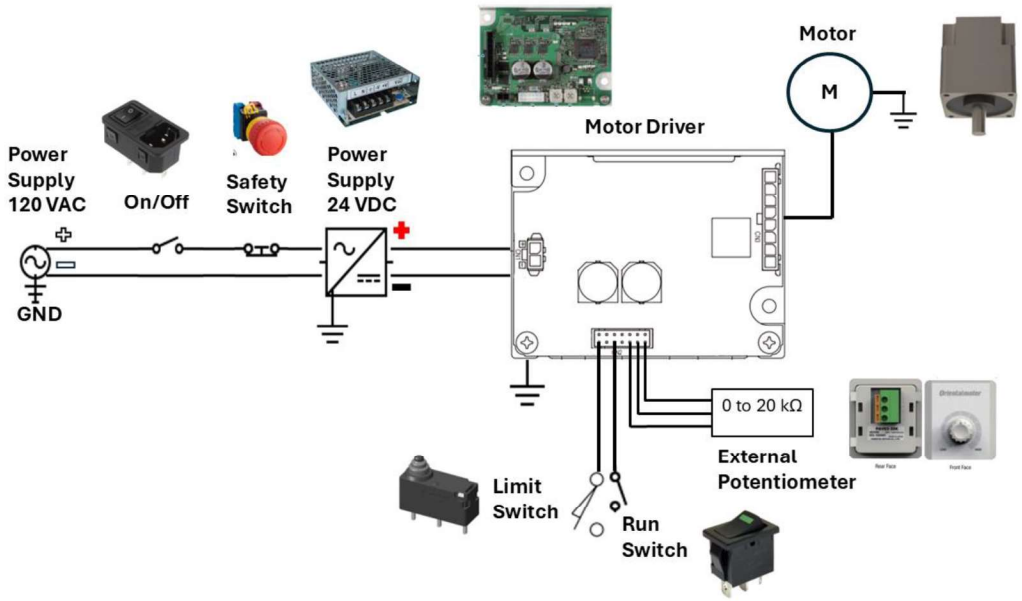

Figure 17 – Circuit diagram of the automated compost mixer electrical system

The system output is designed to generate mechanical rotary movement through a brushless DC motor. In the circuit design showcased in Figure 18, a 50:1 ratio gearbox gears down the motor, which connects to CN3 on the motor driver. The power supply cable connects the motor driver to the AC/DC power supply through the CN1 positive and negative pins. Between the standard wall outlet and the AC/DC power supply, an On/Off switch and a safety switch are added to the circuit configuration. The safety switch enables quick disconnection of the entire system in case of faults or emergencies, while the On/Off switch enables convenient power control at the source. A connection cable attaches to CN2 on the motor driver and to other components, facilitating easy integration and flexible placement.

Additionally, in this design, a limit switch and a run switch with an LED light indicator are connected to the motor driver to ensure safe operation. The limit switch and run switch are connected to pins 14 and 13 of CN2 respectively, and together they are grounded at pin 5 of CN2. The limit switch, integrated into one of the rails, detects whether the vessel is securely clamped. If the run switch is pressed and the vessel is clamped, the limit switch sends an output signal to activate the motor. However, if the vessel is not clamped, the motor remains inactive even if the run switch is pressed. Moreover, pins 6 to 8 are allocated for an external speed potentiometer to adjust motor speed by varying the input voltage. The AC/DC power supply, motor driver, and motor are grounded to a common ground, the metal control box. The technical

specifications of the proposed components, detailed in Appendix B, Table B3, influenced overall circuit design and connections, illustrated in Figure 17 and Figure 18.

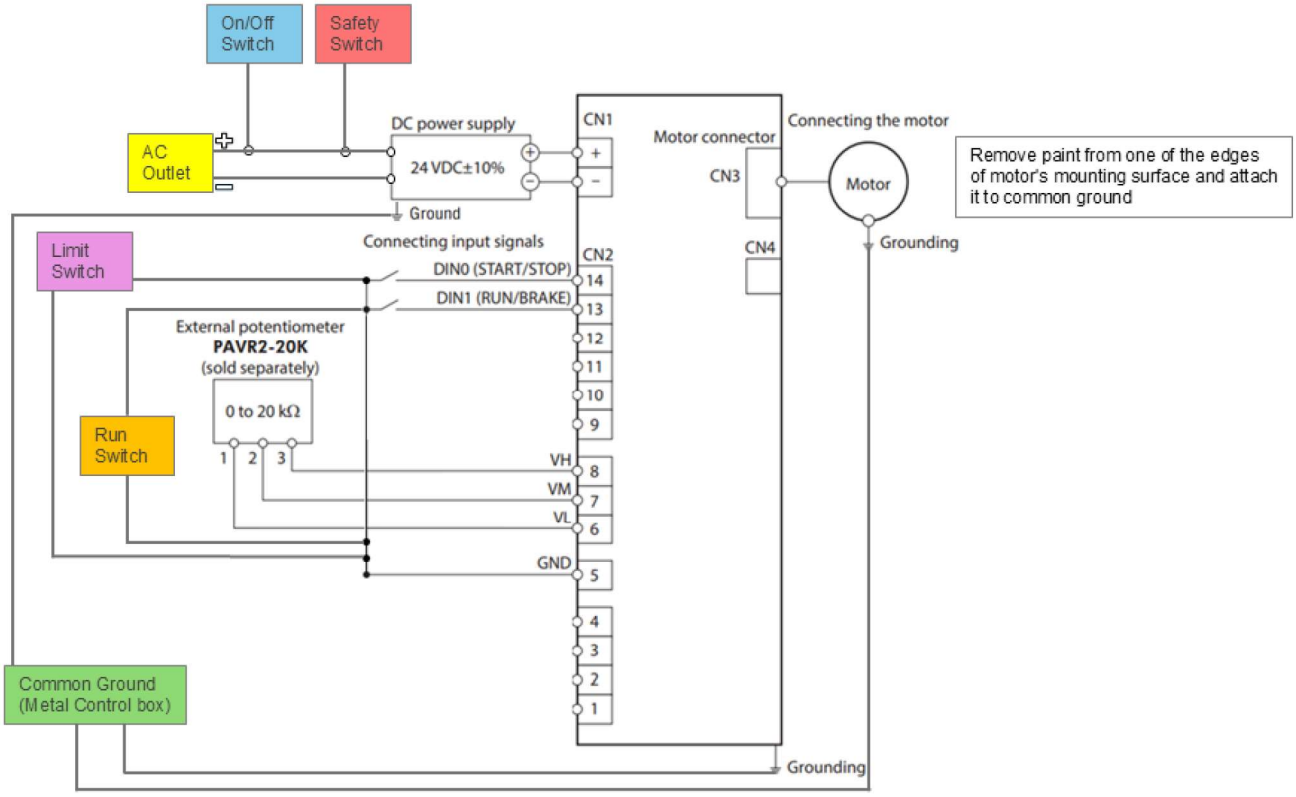

Figure 18 – Hardware circuit of the automated compost mixer electrical system. Adapted from the motor driver's user manual [13, pp. 16]. Colored boxes attached to the driver pins showcase additions to the circuit, where each color resembles the color of the wire it uses to attach.

The team selected a brushless DC motor over a brushed DC motor or stepper motor after careful analysis of performance requirements which can be found in Appendix B, under B.4.

The team determined the required torque and rotations per minute (RPM) to select the most suitable brushless DC motor by testing a mixing blade prototype. The methods the team took to determine these values are found in Appendix B, under B.5.

The team selected Oriental motors brushless DC motor for its ability to meet the torque and speed requirements of 60 inch-pounds and 40-90 rpm, as well as for its lightweight and compact design. In this system, the motor will be mounted on the lid and freely moved up and down along the side linear rails, making its lightweight and compact design crucial for ease of handling and ergonomic operation.

Additionally, choosing a motor system that includes both the motor driver and gearbox significantly simplified the circuit design, eliminating the need for separate components. This reduced the overall complexity of the system.

All circuit components are securely housed within a metal control box, positioned on the right side of the system on the same base plate, to provide damage protection and secure grounding, as shown in Figure 19.

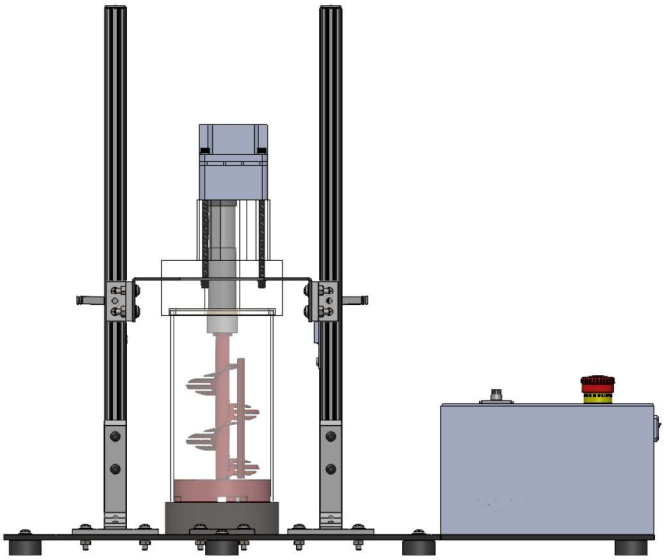

Figure 19 – Placement of the metal control box in the overall system

The control components, including the speed potentiometer, safety switch, On/Off switch, and run switch, are positioned across three walls of the control box to ensure easy user access, as shown in Figure 20. The placement of these components was determined based on ergonomic considerations. The electronic components that do not require user access, such as the power supply, motor driver, and wire connections are securely positioned within the metal control box, keeping them hidden and protected, as shown in Figure 21 and Figure 22.

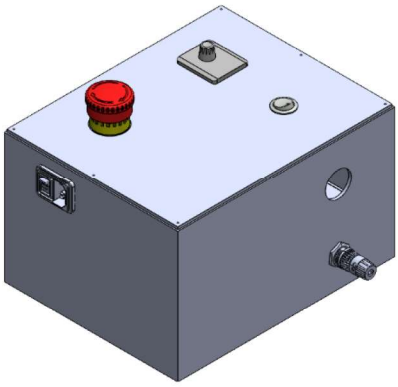

Figure 20 – Placements of the electrical control components to the outside of the metal control box

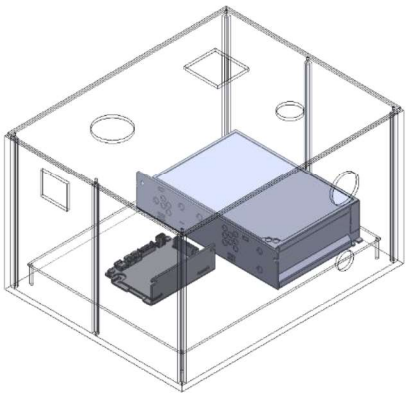

Figure 21 – Placement of the motor driver and power supply within the metal control box

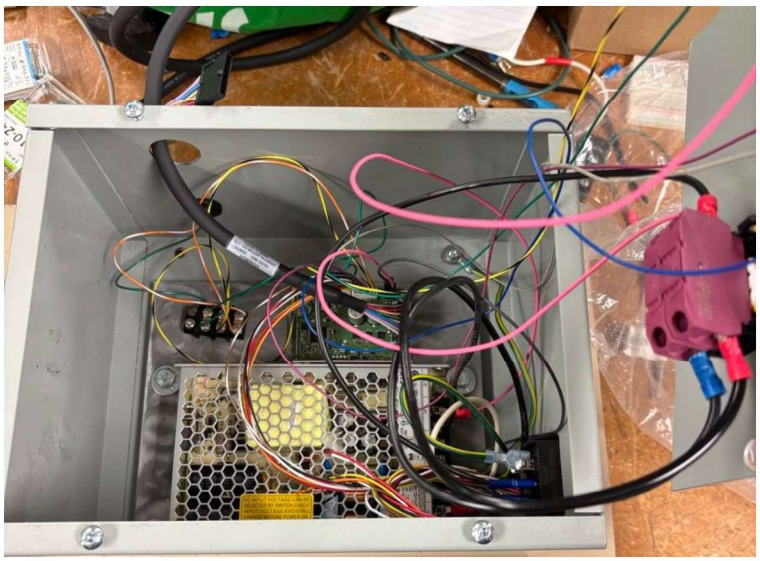

Figure 22 – Internal components of the metal control box

3.2.2 Vessel Clamping Mechanism

The vessel clamping mechanism leverages the existing geometry of the original vessel and the vertical compressive force of the motor's weight to secure the lid onto the glass. The vessel clamping mechanism includes the motor-lid system and linear rail system, shown in Figure 23 and Figure 24, respectively.

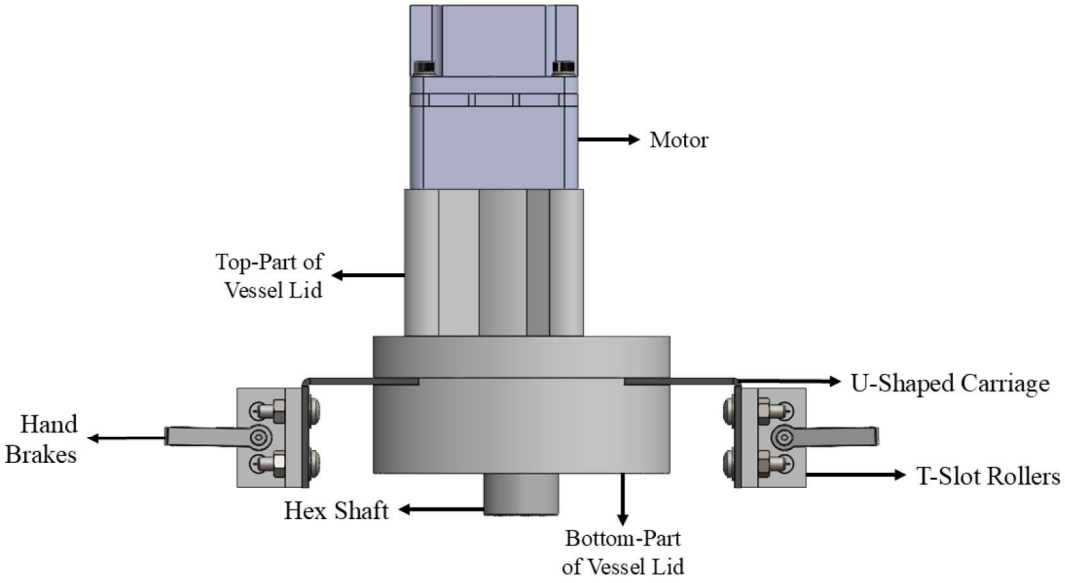

Figure 23 – Motor-lid system applying vertical compression for clamping mechanism

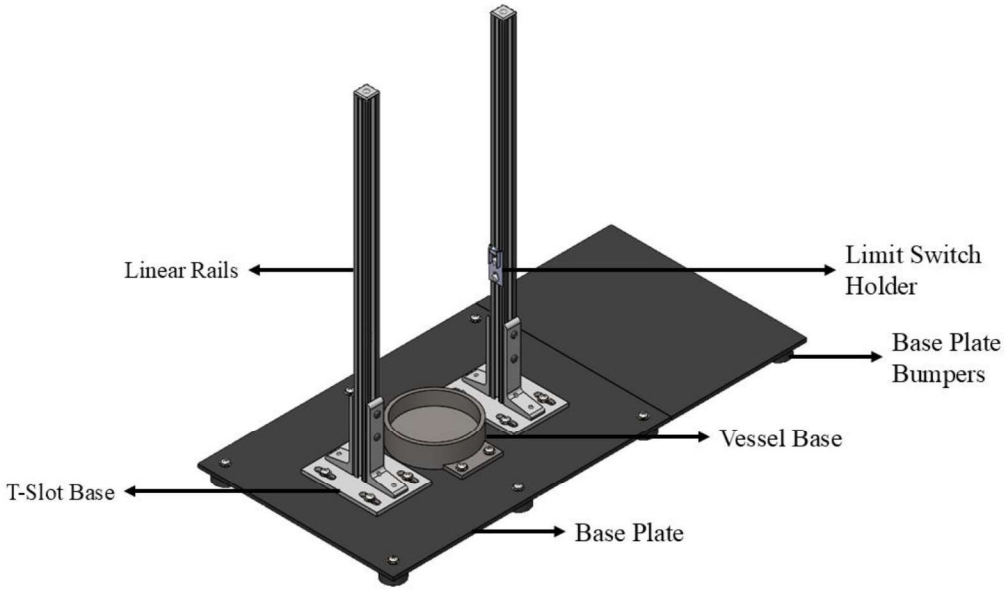

Figure 24 – Rail system applying structural support for clamping mechanism

The vessel clamping mechanism plays a crucial role in maintaining proper alignment between the motor and the vessel. The mechanism ensures a secure motor-shaft attachment, eliminating the need for technicians to manually hold the motor during operation. Additionally, the mechanism reduces the risk of vessel damage caused by component misalignment, which could otherwise result in the internal mixing mechanism contacting and damaging the vessel's

surfaces. By securing the components in place, the design also enhances operator safety by mitigating potential hazards associated with mechanical failures.

The clamping mechanism to secure the vessel's position is applied via axial compressive loading using manual linear rails and set-screw handbrakes. A two-piece vessel lid, motor, and a U-shaped carriage are fixed together, seen in Figure 23, as one body using ¼" fasteners. The carriage of the motor-lid body is then fastened to T-slot rollers on two linear rails to the side of the vessel. When loading the glass vessel onto the machine, the motor-lid body is lifted above 12 inches up to a maximum height of 24 inches from the base plate. Afterwards, the motor-lid body is lowered and secured using set-screw handbrakes. At the clamped position, the lid is at a height of 12 inches above the base plate. A limit switch, Figure 25, is placed at this same height on the linear rails to ensure that the vessel is clamped before operation.

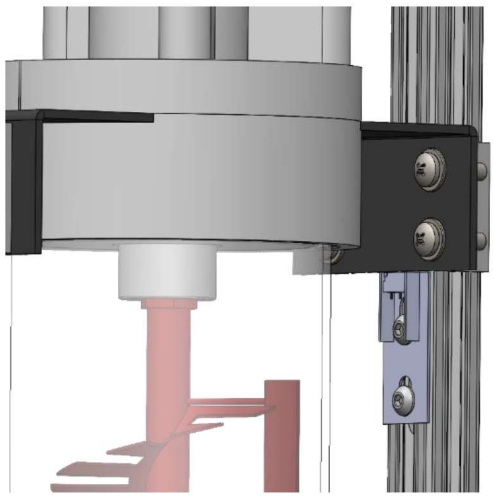

Figure 25 Pressed limit switch position

The glass vessel bottom will be placed in a pocket, labelled vessel base in Figure 26, with a 0.02 inch tolerance to the glass dimension for precise alignment as the existing ECHO instruments vessel base is 0.12 inch greater than the vessel. Figure 27 illustrates an overview of the motion of the vessel clamping mechanism.



Figure 26 – Vessel base coated on the inside with silicone



Figure 27 – Lid clamping mechanism overview where the arrow showcases the movement of the motor-lid system

By clamping the vessel axially, the cylindrical shape of the vessel will sustain a greater compressive load. For this reason, the bottom-part of the lid contains an insert that was coated with silicone, to provide cushion and resistance to fracture as well as increase friction, shown in Figure 28.

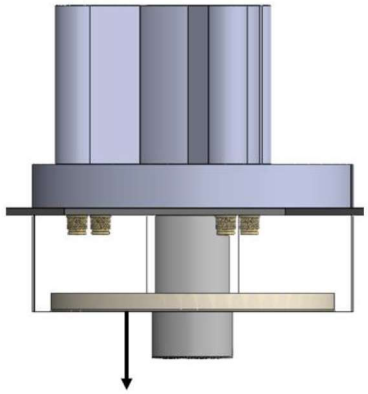

Figure 28 – Bottom-part of the lid protective insert

For the prototype, the top-part and bottom-part of the lid was 3D printed using Polylactic Acid (PLA), as detailed in Table B7, under B.7 of Appendix B. The top-part of the lid was originally printed in the form shown in Figure 30 for more structure and stability to hold the motor. However, to simplify geometry and ease the manufacturing process, the top-part of the lid should be formed as shown in Figure 29, where four cylindrical spacers that are 2.75 inches long for motor shaft alignment. Ideally, the final design of the lid would be manufactured from Teflon using a molding process, where resin is shaped into the lid form shown in Figure 30.

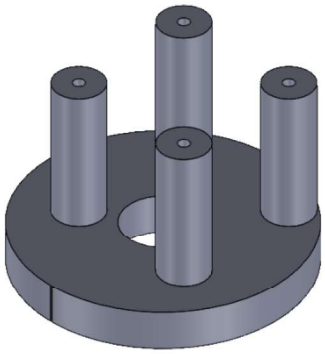

Figure 29 – Manufactured form for top-part of the lid

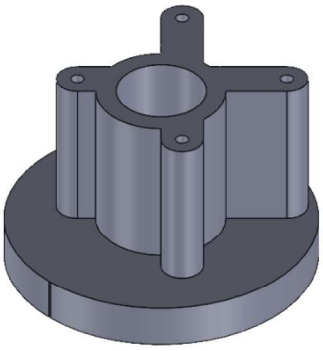

Figure 30 – 3D printed form for top-part of the lid

3.2.3 Shaft-Motor Attachment

A nesting hex attachment connects the motor drive shaft to the mixing blade. To simplify the shaft-motor attachment, a hexagonal nut was attached to the end of the hollow mixing blade shaft. This design allows a deep-set hex socket to be securely attached to the motor using a set-screw keyed collar. The socket fits over the shaft, securely connecting the two, as shown in

Figure 31. The design uses stainless steel parts to meet the non-corrosive and non-biodegradable material specifications of the project.

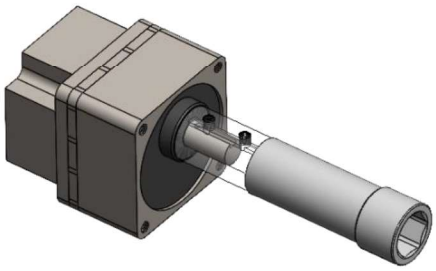

Figure 31 – Hollow mixing blade shaft with compatible motor drive hex attachment

The hex-fitting attachment was chosen to work with the vessel clamping mechanism. Since the motor is attached to the top of the vessel, the hex fitting is ideal as it can be aligned and connected by simply lowering the lid onto the vessel and aligning the hex geometries. This reduces the risk of ergonomic strain as there is no need to reach into the narrow vessel to manually attach it or use tools. The hex nut end of the blade can easily be cleaned between experiments to remove residue or microbes, as there are no crevices that are difficult to access. Since hexagonal shapes are commonly used, the design was easy to prototype, and can be easily manufactured for 48 vessels, at lower costs compared to other commonly used couplings. The hex design is also easily removed to quickly switch between vessels and efficiently mix all 48 vessels. The hex fitting is simple, avoiding complicated geometry which could allow compost to collect. The hex design attachment will effectively transmit torque and rotational movement by connecting the motor to the internal blade in each vessel, while preventing damage to the center grate post of the vessel. The simple design will be easily attached and released without the need for tools or awkward manual work.

The external mechanism, comprising the electronic box, vessel-clamping mechanism, and shaft-motor attachment, seamlessly integrates with the internal mechanism, which includes the mixing blade, to automate the compost mixing process within the glass vessel. This design is evaluated in the following verification section to confirm its overall functionality.

The manufacturing drawings for the vessel assembly, subassemblies, and individual parts including the hex attachment, grate-holding sleeve, vessel base, wooden base, u-shaped carriage, top-part of the vessel lid, bottom-part of the vessel lid, mixing blade, electronics box, limit

switch holder, t-slot frame, t-slot frame base, and t-slot carriage are found in Appendix B, under B.8.

4.0 Verification Procedure

This section details the verification process and the pass criteria for each specification in Table 3, with green indicating a pass and red indicating an inability to test. Some specifications have steps that are to be taken in case of a verification failure, to understand why and modify the procedure or design before attempting the test again.

Table 3. Technical specifications and passing criteria for each verification procedure

Spec.	Description	Criteria	Verification Method	Pass/Fail
S1 – Material Specifications				
S1.1	Corrosion resistant material	Material properties are suitable	Sect: 4.1	Pass
S1.2	Non-antimicrobial material	Material properties are suitable	Sect: 4.1	Pass
S1.3	Non-biodegradable material	Material properties are suitable	Sect: 4.1	Pass
S1.4	Heat resistant material	>58 °C	Sect: 4.1	Pass
S1.5	Material hardness	< 5.5 (Mohs scale) [12]	Sect: 4.1	Pass
S2 – Post-Mixing Compost Specifications				
S2.1	Post-mixing compost uniformity	<10 % Difference at 3 depths	Sect: 4.2.1	TBD
S2.2	Compost spillage tolerance	≤ 0.009 g	Sect: 4.2.2	TBD
S3 – Mixing Space Specifications				
S3.1	Mixing blade length	5.91 – 7.87 in	Sect: 4.3.1	Pass
S3.2	Mixing diameter	3.54 – 4.50 in	Sect: 4.3.2	Pass
S4 – Electrical Specifications				
S4.1	Agitation mechanism noise output	< 87 dBA	Sect: 4.4.1	Pass
S4.2	Variability in speed	30 – 60 rpm	Sect: 4.4.2	Pass
S4.3	Power use	≤ 120 V ± 5 V ≤ 13 A ± 0.6 A	Sect: 4.4.3	Pass
S5 – Cost Specifications				
S5.1	Manufactured cost	< $6500 CAD	Sect: 4.5	Pass

Spec.	Description	Criteria	Verification Method	Pass/Fail
S6 – Operational Specifications				
S6.1	Number of operators	1 Person	Sect: 4.6	Pass
S7 – Physical Specifications				
S7.1	Weight	< 25 kg	Sect: 4.7.1	Pass
S7.2	Size (length x width)	74.8 x 35.4 in	Sect: 4.7.2	Pass

4.1 Material Specifications (S1.1 – S1.5)

The properties of materials used in the design must be researched to ensure they will be able to withstand the composting environment. Data sheets for each part ordered were used to verify that all parts stored inside the vessel meet the material specifications. For a part to pass, its material properties must meet the following criteria: corrosion-resistant, non-antimicrobial, non-biodegradable, stable at temperatures up to 58°C, and, if in contact with glass, a hardness value of less than 5.5 on the Mohs hardness scale [12]. If each part stored inside the vessel (on the internal mechanism) meets these criteria, it passes.

Before manufacturing a full set of the mixing blades, NRC may choose to do an experiment to compare a control vessel and a vessel with a mixing blade prototype to verify the materials are acceptable. As each of NRC's experiments take 90 days, this is beyond the scope of this course.

The data sheets and material properties used to verify the material specifications can be found in Appendix D. Since all components in contact with the glass were coated with silicone and the remaining parts that stay inside the compost vessel were made from stainless steel, they meet the material requirements listed in S1.1 – S1.5.

4.2 Post-Mixing Compost Specifications

These verification procedures will confirm the mixing device can uniformly mix the compost without significant spillage from the vessel.

4.2.1 Post-mixing compost uniformity (S2.1)

Equipment:

A vessel, mixing blade, mixing device, 1.25 L of compost, 100 blue plastic 0.1 in diameter beads, 100 orange plastic 0.1 in diameter beads, 250 mL/1 cup measuring cup, and a timer.

Procedure:

1. Place the mixing blade in the vessel
2. Count and add 100 orange beads to the vessel
3. Fill the vessel 2/3 full with compost (1.25 L)
4. Count and add 100 blue beads to the vessel
5. Clamp the vessel in the mixing device
6. Mix for 2 minutes at 30 to 60 rpm as indicated on the potentiometer
7. Unclamp and remove the vessel from the mixing device
8. Take 250 mL samples from the top, middle, and bottom of the vessel
9. Count the number of orange and blue beads in each sample to calculate the test concentration and the expected concentration of beads in each sample, using Equation 2 in Appendix B, under B.6
10. Calculate the percent error between the expected and test concentrations for all samples using Equation 3 in Appendix B, under B.6

Passing criteria:

< 20% error between the test and expected concentrations

Failure mitigation:

If it fails, the compost can be mixed for a longer time or at higher speeds to determine the minimum required mixing time and speed.

Results:

The post-mixing compost uniformity verification procedure was unable to be completed safely due to the clamping mechanism failing at high mixing speeds. This verification can be done safely when the glass vessel does not slip or spin at high mixing speeds. The results from the compost spillage tolerance verification procedure can go in Table 4, Table 5, and Table 6. These tables have spaces for the error between the expected concentration and the concentration determined in the test procedure.

Table 4 will show the resulting bead distribution for the blue beads initially placed on top of the compost.

Table 4. Mixing verification results for bead distribution from the bottom (blue beads)

Sample	# Blue beads	Bead concentration (beads/mL)	Expected concentration (beads/mL)	Percent error (%)
Top	TBD			
Middle	TBD			
Bottom	TBD			
Average	TBD			

If the percent error values are all below the passing criteria of 20% error, this would indicate that the compost mixer successfully uniformly distributed beads from the top, throughout the entire sample. Table 5 will show the resulting bead distribution for the orange beads initially placed below the compost.

Table 5. Mixing verification results for bead distribution from the bottom (orange beads)

Sample	# Orange beads	Bead concentration (beads/mL)	Expected concentration (beads/mL)	Percent error (%)
Top	TBD			
Middle	TBD			
Bottom	TBD			
Average	TBD			

If the percent error values are all below the passing criteria of 20% error, this would indicate that the compost mixer successfully uniformly distributed beads from the bottom, throughout the entire sample. Table 6 will show the resulting overall bead distribution for the blue and orange beads initially placed below and above the compost.

Table 6. Mixing verification results for bead distribution from the top (blue & orange beads)

Sample	# Beads	Bead concentration (beads/mL)	Expected concentration (beads/mL)	Percent error (%)
Top	TBD			
Middle	TBD			

Sample	# Beads	Bead concentration (beads/mL)	Expected concentration (beads/mL)	Percent error (%)
Bottom	TBD			
Average	TBD			

If the percent error values are all below the passing criteria of 20% error, this would indicate that the compost mixer successfully and uniformly distributed beads from the top and bottom throughout the entire sample.

4.2.2 Compost spillage tolerance (S2.2)

Equipment:

A vessel, the compost mixing device, 1.25L compost, 250ml/1 cup measuring cups, and a scale accurate to one hundredth of a gram (two decimal places)

Procedure:

1. Place the mixing blade in a vessel
2. Fill the vessel 2/3 full with compost (1.25 L)
3. Weigh the vessel, mixing blade, and compost on the scale
4. Clamp the vessel in the mixing device
5. Mix the compost for 2 minutes at speeds from 30 – 60 rpm as indicated on the potentiometer
6. Unclamp and remove the vessel from the mixing device
7. Weigh the vessel, mixing blade, and compost on the scale again
8. Compare the numbers to find the difference

Passing criteria:

Both measurements are the same, indicating a change ≤ 0.009 g

Failure mitigation:

If the test fails, it should be repeated at lower mixing speeds until it passes the verification procedure to determine acceptable mixing speed ranges.

Results:

The compost spillage tolerance verification procedure was unable to be completed safely due to the clamping mechanism failing at high mixing speeds. This verification can be done safely when the glass vessel does not slip or spin at high mixing speeds. The results from the compost spillage tolerance verification procedure can go in Table 7

Table 7. Compost spillage tolerance measurements and results

Initial weight (g)	Final weight (g)	Difference (g)	Difference passing criteria (g)
TBD	TBD	TBD	0.009

Table 7 will show the difference between the initial and final weight measured on a scale accurate to one hundredth of a gram (two decimal places). If the difference is less than 0.009 g, the verification procedure passes. If the difference is greater than 0.009 g, the verification procedure fails and the steps in the failure mitigation section can be followed.

4.3 Mixing Space Specifications

These procedures will verify the design achieves a full mixing depth and effectively mixes the compost radially without scratching the glass.

4.3.1 Mixing blade length (S3.1)

Equipment:

A vice clamp, mixing blade, and calipers (8 in)

Procedure:

1. Securely clamp the mixing blade to keep it stationary
2. Measure from the bottom of the auger blade to the top of the auger blade with calipers as shown in Figure 32

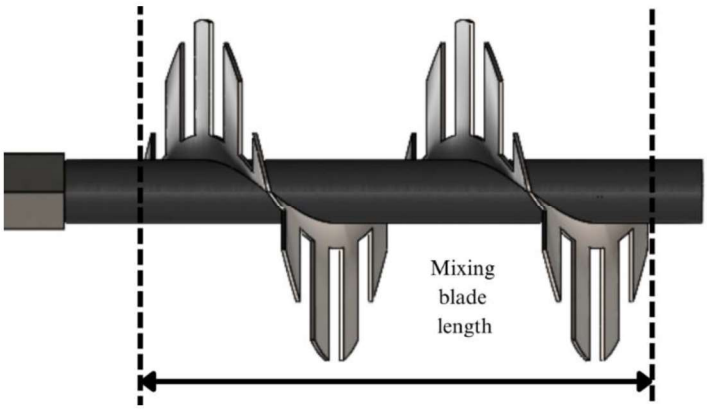

Figure 32 – Diagram indicating mixing blade length measurement

3. Repeat measurement three times and calculate the average to reduce the effect of human error

Passing criteria:

Average measurement between 5.91 – 7.87 in

Results:

The results of the mixing blade length measurements are shown in Table 8.

Table 8. Mixing blade length measurement

Trial	Length measurement (in)
1	6.50
2	6.69
3	6.57
Average	6.59

The average mixing blade length measurement of 6.59 in is between 5.91 – 7.87 in, so the mixing blade length passed the verification test.

4.3.2 Mixing diameter (S3.2)

Equipment:

Vessel, a vice clamp, mixing blade, and calipers (8 in)

Procedure:

1. Securely clamp the mixing blade to keep it stationary
2. Measure the diameter from one edge of the auger blade to the other with calipers as shown in Figure 33

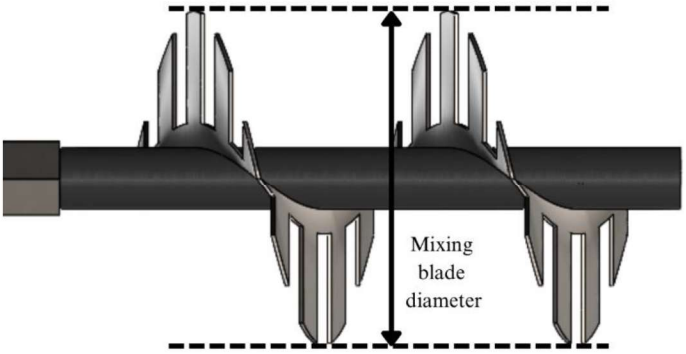

Figure 33 – Diagram indicating mixing blade length measurement

3. Repeat measurement three times and calculate the average to reduce the effect of human error
4. Put mixing blade into the vessel to ensure the wiper blade is in contact with the inner surface of the glass vessel

Passing criteria:

Average measurement between 3.54 – 4.50 in

Results:

The results of the mixing blade measurements are shown in Table 9.

Table 9. Mixing blade diameter measurement

Trial	Diameter measurement (in)
1	3.65
2	3.64
3	3.64
Average	3.64

When the mixing blade is placed in the vessel, the wiper blade is in contact with the glass, and the average mixing blade diameter measurement of 3.64 in is between 3.54 – 4.50 in, so the mixing blade diameter passed the verification test.

4.4 Electrical Specifications

The electrical specifications will verify the technical specifications of the motor and controls system. The noise created by the device cannot be loud enough to create a hazard and require

hearing protection to be worn by the technicians operating it. The device must also mix compost at varying speeds to account for different consistencies while powered by a standard wall outlet.

4.4.1 Agitation mechanism noise output (S4.1)

Equipment:

Vessel, mixing blade, 1.25 L compost, mixing device, sound level meter app, and measuring tape

Procedure:

1. Set up the sound level meter app 12 inches in front of the motor of the device, where the operator would be standing, next to the table
2. Set up and turn on the mixing device and carry out the mixing process
3. Record the maximum noise level measured on the sound meter over a 2-minute period

Passing criteria:

No measurement exceeding 87 dBA

Failure mitigation:

Insulating materials can be added to muffle noise coming from the motor, or hearing protection must be worn.

Results:

The maximum noise level recorded during the 2-minute noise output verification procedure was 68 dB, so the mixer design emits a safe level of noise which would not require the operators to wear hearing protection.

4.4.2 Variability in speed (S4.2)

Equipment:

Mixing device, a vessel, a slow-motion capable camera, and a timer

Procedure:

1. Set up the mixing device with the mixing blade in the vessel
2. Turn it on and set it to the lowest speed setting
3. Set up a timer and a camera with slow motion capabilities
4. Record the mixing process for 2 minutes
5. Review the footage to count the revolutions

6. Turn the speed dial to the highest setting and repeat the process to determine the minimum and maximum speed settings of the mixing device

Passing criteria:

Lowest speed setting ≤ 30 rpm and highest speed setting ≥ 60 rpm

Failure mitigation:

Potentiometer controlling the mixing speed may need to be recalibrated.

Results:

Table 10 below shows the results of the mixing speed variability test. Both the high and low speed settings are within the range of the passing criteria, so the mixing design passed the variability in speed verification procedure.

Table 10. Speed variability verification results

Setting	Speed (rpm)	Passing criteria (rpm)	Pass/Fail
Low	27.5	≤ 30 rpm	Pass
High	61.0	≥ 60 rpm	Pass

4.4.3 Power use (S4.3)

Equipment:

Mixing device, Watts up device, power source

Procedure:

1. Plug the mixing device into a Watts up device
2. Connect to a power source
3. Turn on the mixing device
4. Record the voltage and current measured by Watts up

Passing criteria:

Voltage ≤ 120 V ± 5 V and current ≤ 13 A ± 0.6 A

Results:

The Watts up device recorded a voltage of 122.9 V and a current of 0.401 A so the mixing device passed the power use verification procedure.

4.5 Manufactured Cost Specifications (S5.1)

All the receipts from materials and manufacturing costs were uploaded to a shared folder, so the total can be tracked to ensure the sum of all expenses is < $6500.

Results:

Most of the manufacturing was completed at the university workshop to minimize costs. Additionally, components were recycled or taken from spare parts to further reduce costs, so some components are not reflected in the bill of materials. The bill of materials can be found in Appendix C, with the name, price, and quantity of each part listed. The total cost of the prototype mixing design including the materials used in testing and development was $1863.24. This was $4636.76 below the budget of $6500, so the design passed the manufactured cost verification.

4.6 Number of Operators Specifications (S6.1)

Equipment:

Mixing device, vessel, respirometer lid and fasteners, wingnut ratchet

Procedure:

One team member will perform this procedure without assistance.

1. Remove respirator lid from vessel using wingnut ratchet
2. Place the vessel in the mixing device
3. Lower motor and lid
4. Turn vessel to align hex attachments
5. Clamp lid and vessel in place with hand brakes
6. Turn on mixing device
7. Turn off mixing device
8. Unclamp lid and vessel
9. Lift and secure lid above the vessel
10. Remove the vessel from the mixing device
11. Replace the respirometer lid on the vessel

Passing criteria:

A single person can perform the entire process without assistance

Results:

The mixer design passed the verification procedure for number of operators, as the mixing process was completed by a single operator.

4.7 Physical Specifications

The mixing device will be stored on a tabletop in the NRCs composting lab. The footprint of the design needs to fit on this table and the weight of the device must be supported by the table.

4.7.1 Weight (S7.1)

Equipment:

Mixing device, vessel, 1.25 L of compost, standard bathroom scale (350 lb. capacity)

Procedure:

1. Place the design on a standard bathroom scale
2. Record the weight displayed

Passing criteria:

Scale reads $\leq$ 25 kg or 55.1 lbs

Failure mitigation:

Lighter/thinner building materials can be considered, a large base plate could be added to evenly distribute the weight, or the table can be replaced with a sturdier table or reinforced to ensure the weight is supported.

Results:

The weight of the entire design was measured as 14.5 kg. This is below the passing criteria of 25 kg, so the weight of the design passed the verification procedure.

4.7.2 Size (S7.2)

Equipment:

Mixing device, tape measure, large flat floor/table surface

Procedure:

1. Place the mixing device on a flat surface

2. Measure the maximum length of the design footprint using a tape measure, shown in Figure 34
3. Measure the maximum width of the design footprint using a tape measure, shown in Figure 34

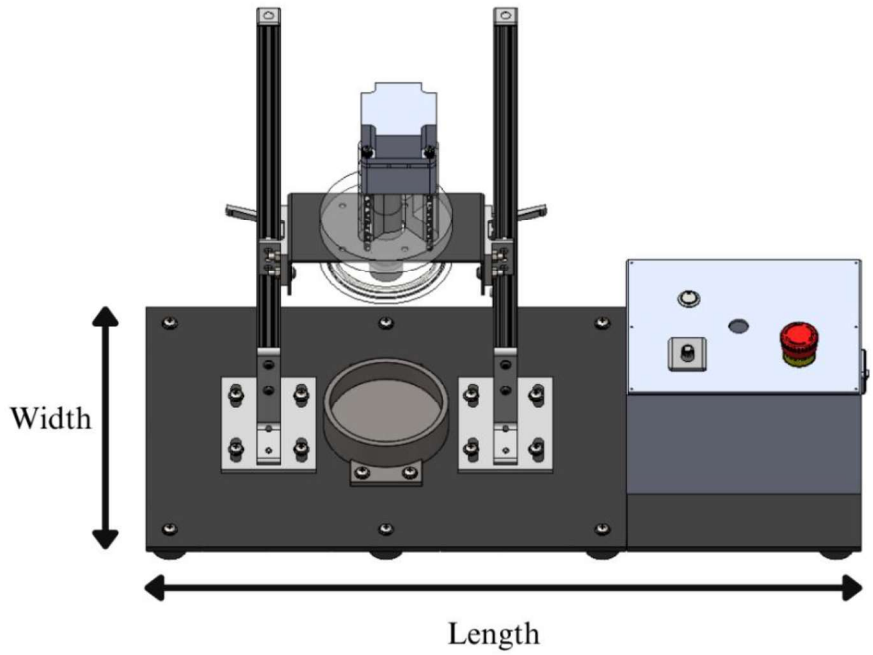

Figure 34 – Diagram indicating mixing length and width measurements of the base plate

Passing criteria:

Length ≤ 74.8 in and Width ≤ 35.4 in

Results:

Table 11 shows the results obtained after measuring the length and width of the wood base plate.

Table 11. Base plate size verification results

Dimension	Measurement (in)	Passing criteria (in)	Pass/Fail
Length	31.0	74.8	Pass
Width	9.9	35.4	Pass

The design prototype passed all the verification procedures that were able to be completed and met the target specs for project success and client approval. The verification procedures for S21 post-mixing compost uniformity and S2.2 compost spillage tolerance were unable to be safely completed due to the risk of the glass breaking as the vessel starts to spin and slip at high mixing speeds. Although these tests were not completed, based on testing of the mixing blade prototype in alternate vessels, the prototype is expected to pass these verification procedures once the vessel can be safely clamped and secured. The recommendations section includes possible improvements to the design of the vessel clamping system.

5.0 Sustainability

Sustainable design benefits all stakeholders of a project, including the public and the environment. It reduces long-term costs by minimizing the need for maintenance, repair, and redesign. This is achieved through self-sufficiency, user well-being, and the use of renewable resources. Green Project Management ® is a global organization that promotes sustainability in project management. It has adopted the Triple Bottom Line (TBL) framework, developed by John Elkington, to assess project success. The TBL framework evaluates performance across three key areas, known as the “three P’s”: People, Planet and Profit. People measure a project’s impact on social equity. Planet assesses its environmental impact. Profit evaluates financial feasibility and profitability.

This TBL framework has been adapted by the University of Waterloo’s Engineering Department to evaluate capstone projects. This adapted framework is applied to the automated compost mixer, focusing on six sustainability elements: Project Health and Safety, Flexibility/Optimality, Indirect Benefits, Employment and Staffing, Noise Pollution, and Waste Generation. These elements are scored in Table 12, which compares the current situation of manual mixing with the proposed solution of automated mixing to determine the change in sustainability impact.

Table 12. GPM-5 scored elements

	Description of the situation (Cause)	Potential Sustainability Impact	Impact Score	Proposed Response	New Score	Change
People Impacts						
Project Health and Safety	Manually mixing compost in 48 slender vessels weekly with varying compost consistencies is difficult and strenuous.	Workplace injury to technicians' wrists, shoulders and arms occurs due to long-term ergonomic strain from manual mixing.	**1**	Automated compost mixer eliminates manual process and include safety measures to address hazards associated with operation of mixer, such as a safety switch and operation instructions.	**4**	**3**
Prosperity Impacts						
Flexibility / Optionality	The material of the tools used to mix compost must not scratch the internal surfaces or be biodegradable that will invalidate testing. Technicians manually mix individual vessels for uniform mixing and prevent scratching.	Human error can damage the vessels and invalidate the biodegradation testing.	**2**	Automated compost mixer design utilizes suitable materials such as steel and silicone and mix predictably for uniform mixing.	**3**	**2**
Indirect benefits	Manually mixing 48 vessels manually requires four hours technicians' time per week.	There is decreased productivity due to time loss to mixing the compost manually, in addition to workplace injury from prolonged ergonomic strain.	**1**	Automating mixing process will free up technicians' time to work on other tasks and eliminate ergonomic injury.	**5**	**4**
Employment and Staffing	Manually mixing compost is a physically strenuous task and requires dexterity to avoid scratching internal surfaces.	The dexterity and physical requirements to appropriately mix the compost limit suitable technicians.	**1**	Automating mixing process eliminates physical requirements and increases accessibility for staffing.	**4**	**3**
Planet Impacts						
Noise Pollution	Manually mixing compost introduces human error to mixing procedure, resulting in undesirable audible clashes between instruments and vessel surfaces.	The instruments used for manually mixing the compost can be noisy when it rattles against the vessel surfaces during mixing.	**2**	Adhering to an operational noise level under 87 dBA, the automated mixer lowers noise pollution by eliminating technicians' proximity to mixing process.	**3**	**1**
Waste Generation	The manual mixing instruments are used for multiple vessels, and compost material is lost between vessels.	The material lost affects consistency of experiment as vessels vary in mass. If the loss is >0.009g, it is negligible.	**3**	The mixing blades of automated mixers will stay in vessel, eliminating material lost between each vessel.	**5**	**2**

Table 12 summarizes the sustainability evaluation for the automated compost mixer, achieving a total TBL score of +15. For People impacts, the mixer significantly improves Project Health and Safety with a score increase of 3 and Indirect Benefits with a score increase of 4 by reducing ergonomic strain and saving technicians four hours per week, allowing them to focus on other tasks. Employment and Staffing improves with a score increase of 3 by lowering physical demands, making the task accessible to more staff. Flexibility/Optimality improves with a score increase of 2, as durable materials like stainless steel and silicone are used, though their effectiveness for uniform mixing need verification. For Planet impacts, Waste Generation improves with a score increase of 2 by minimizing cross-contamination and material loss; a benefit expected to be confirmed once the clamping mechanism prevents glass vessel slippage at high speeds. Noise Pollution improves with a score increase of 1, operating at 68 dBA, below the 87 dBA safety limit. This score reflects the mixer's positive impact on social equity, environmental sustainability, and efficiency, aligning with NRC's mission to advance sustainable technologies.

6.0 Conclusion

6.1 Summary

The automated compost mixing device developed for the National Research Council (NRC) significantly enhances the biodegradability testing of plastics. It tackles the inefficiencies and ergonomic challenges of the manual mixing process currently used in NRC's lab. The project set out to automate the mixing of compost in 48 glass vessels, reduce labor for technicians, ensure uniform mixing, and protect the glass vessels from damage. By achieving these goals, the device improves technician well-being, increases research efficiency, and supports NRC's mission to advance sustainable technologies. The design incorporates both internal and external mechanisms to meet these objectives effectively. The internal mechanism consists of an interrupted flighted auger mixing blade, a silicone-coated wiper blade, and a grate-holding sleeve. These components work together to mix compost of varying consistencies while preventing scratches on the glass vessels. The external mechanism includes a brushless DC motor, a clamping system, and a user-friendly control panel. Full-scale implementation of this prototype system would allow a single operator to efficiently mix all 48 vessels independently, which is a significant improvement over manual mixing method.

For the NRC, this device streamlines research processes, enabling more accurate and efficient biodegradability testing. For the broader public, it contributes to sustainable technology development by supporting research into biodegradable plastics, which can reduce environmental waste. Verification testing confirmed the design's success in several key areas. The device operates quietly at 68 dBA, well below the 87 dBA safety limit. Its cost, at $1,863.24, is substantially under the $6,500 budget. The device's compact size, 31.0 x 9.9 inches, fits within the lab's space constraints. The materials used, such as stainless steel and silicone, are corrosion-resistant, heat-resistant, and non-biodegradable, ensuring durability in the composting environment. Additionally, the design promotes sustainability, scoring +15 on the Triple Bottom Line framework. It enhances technician safety by reducing ergonomic strain, minimizes material loss by preventing cross-contamination, and aligns with NRC's commitment to sustainable innovation. However, tests for compost uniformity and spillage tolerance could not be completed due to the glass vessel spinning at high speeds, which posed a risk of breakage.

The following subsections explore these limitations in detail and provide recommendations to further enhance the design's performance and scalability.

6.2 Limitations

The automated compost mixing device reduces the manual effort required by technicians to mix compost within the vessels, addressing the associated ergonomic health risks. Additionally, the device provides a consistent and uniform mixing process that is not achievable through manual methods. However, there are several limitations that remain that could impact the design's ergonomics, durability, and effectiveness.

One key limitation is the reliance on the use of a manual rail system for lifting and clamping the motor-lid assembly to the vessel. While this system ensures stability and alignment of the components during mixing, it requires manual effort from the operator that may be strenuous depending on their standing height when repeated for 48 vessels. Additionally, the static weight of the motor, which is intended to provide the vertical compressive load, does not provide a dynamic response for the increasing torque during the mixing process. This limitation results in the glass vessel spinning when the static load cannot counteract the torque generated with large compost volumes.

Scalability remains a challenge for the parts designed and selected in the design, as the current design is optimized for the vessel provided by NRC. There are components that require precise fit to operate effectively, that could pose to be an issue depending on variance between each vessel component manufactured by ECHO instruments. The team contacted ECHO instruments for dimensions and CAD models of their instruments but were denied. Additionally, 3D-printed parts are not feasible for scalability, as these parts are limited by the availability of Fused Filament Fabrication (FFF) printers, printing speed, and cost of the filament and additional post-processing coating parts in silicone. The layer lines on FFF 3D-printed parts can harbor dirt and bacteria whilst making it difficult to clean, another reason for coating parts in silicone.

The grate-holding sleeve, designed to prevent metal-on-glass-contact and immobilize the metal grate, demonstrated a failure mode at high torque loads. When compost binding occurred, the torque exceeded the sleeve's resistive friction force, causing both the sleeve and the grate to rotate together. While this failure reduces mixing efficiency, the sleeve was still effective in

preventing direct contact between the metal grate and the glass vessel walls, preventing the risk of scratches.

Similarly, the wiper blade, which scrapes compost from the vessel walls, requires a precise fit to ensure effective operation. Over time, inconsistencies in manufacturing tolerances of the vessels or material degradation from contact erosion between the vessel and wiper could affect its performance and necessitate replacement. The limitations of the prototype parts inform the manufacturing recommendations for scalability.

Lastly, the scope of verification procedures was limited by project constraints. Although the device successfully mitigates ergonomic strain during compost mixing, additional long-term testing is required to assess potential ergonomic risks associated with repeated machine operation. The inability of the prototype to safely and effectively mix compost at a 2/3rd vessel volume without the glass spinning prevented verification of compost spillage and post-mixing uniformity. Additionally, due to time constraints, it was not possible to evaluate the device's performance over NRC's full 90-day biodegradation testing cycle, particularly for the changing compost sample physical properties over time. These limitations highlight areas for further iteration and testing before full scale implementation.

6.3 Recommendations

This section presents recommendations for improving the design, functionality, and performance of the system based on the findings from testing and evaluation. To achieve full automation and eliminate the need for user involvement beyond switching vessels, linear actuators could replace the current linear rail system. Currently, the linear rails offer additional support for vertical translation, assisting the user. The handbrakes attached to the t-slot carriages provide temporary braking for the lid system, offering users physical relief by reducing the need to hold the system for extended periods. With linear actuators, the users will be able to move the system with the push of a button and eliminating the need for this manual labour.

Additionally, the system requires the mixing blade to rotate independently of the metal grate and center rod. Initially, when the mixing blade rotated, the metal grate and center rod also rotated. The metal feet of the grate could scratch the glass, increasing the risk of contamination as material can accumulate in these scratches. To address this, a grate-holding sleeve was designed; however, due to space and printer limitations, it was challenging to 3D print a precise version.

For future use, the grate-holding sleeve should be customized using injection-molded silicone to ensure precise sizing and the use of materials suited for compost environments. Alternatively, the diameter and feet of the metal grate could be dipped in liquid silicone to prevent scratching the glass, eliminating the need for the sleeve altogether and reducing the difficulty of assembly.

Similarly, the edge of the wiper blade should be manufactured using a custom silicone mold through injection molding. This would ensure precise sizing, and the use of materials optimized for the compost environment, leading to consistent performance. Currently, the wiper blade was molded using silicone purchased from Amazon, resulting in a thick mold that extends around the back of the blade. This decision was made to enhance adhesion and prevent detachment during operation due to the material's soft and flexible material. Using a silicone with higher strength and less elasticity would require less material and prevent deterioration of the wiper blade.

One specific challenge was designing a clamping mechanism around the 11.27" long center rod that protrudes from the middle. The metal grate with center rod presented a design constraint, as it is an integral part of the vessel, and modifying it would risk incompatibility with the respirometer system. The prototype design utilizes the hand brakes and vertical compression from the motor-lid system's weight to secure the glass vessel during operation. In this design, to accommodate the height of the center rod, a tall lid acts as a spacer. The lid was 3D printed out of PLA, and the bulky lid counteracts PLA's lack of rigidity. When manufacturing a simple lid designed using molded resin, the overall weight of the system is reduced without compromising support to the motor and improving ergonomic considerations.

Another approach to reducing the system's weight is repositioning the motor to the side, eliminating the need for constantly lifting it. In this alternative design, power can be transmitted using bevel gears, which transfer motion between shafts at a 90-degree angle. This modification would require extending the shaft length above the center rod and welding a bevel gear to its top, allowing the carriage to move vertically without obstruction. However, a drawback of this design is that bevel gears do not transmit as much torque as a parallel drive arrangement. Nevertheless, this approach would eliminate the need for a bulky lid, providing a lighter and more user-friendly alternative if the original design is found to be too heavy by the users.

During verification of the mixing device, it was noticed that at higher speeds, the glass vessel spins in place, creating high levels of noise and risking damage to the glass. A recommendation for limiting the spinning of the glass vessel, is to add a rubberized bracket clamp at the center of the glass vessel. The t-slot frames would support the bracket clamps, providing structure. As the bracket clamp is tightened, the glass is secured and prevented from spinning. The improved manufacturing processes for the grate-holding sleeve and silicone wiper blade would also help prevent the glass vessel from spinning. Making the grate-holding sleeve from silicone with a higher coefficient of friction would help keep the grate in place. Conversely, making the silicone wiper blade from a silicone with a lower coefficient of friction would reduce the drag on the glass which is causing the vessel to spin.

Currently, one mixing blade mechanism was verified using only one of the 48 glass vessels and using a fresh sample of compost that has not yet been subjected to 90 days in a respirometer. Prior to scaling up the project for all 48 vessels, the team recommends a trial period to see how the design performs mixing compost with varying consistencies over a 90-day experiment.

In summary, the recommended design modifications focus on improving automation and ensuring user-friendliness in design. Implementing these changes will enhance the system's efficiency and functionality. Moving forward, further testing will be essential to validate these improvements and ensure seamless integration with the existing setup.

Overall, the learning experience gained from building the prototype was invaluable. The team learned how to embark in unfamiliar territory and absorb as much knowledge as they could to create a working prototype.

Acknowledgements

The team wants to acknowledge the clients, the advisors, Minami Maeda, Daniel Benedet, and Dale Bourns, for their unwavering support and guidance throughout the duration of the capstone project.

7.0 References

[1] National Research Council Canada. “Advanced Manufacturing Research Facility,” *Government of Canada*, para. 1-2, July 23, 2023. [Online]. Available: https://nrc.canada.ca/en/research-development/nrc-facilities/advanced-manufacturing-research-facility https://nrc.canada.ca/en/research-development/nrc-facilities/advanced-manufacturing-research-facility. [Accessed October 15, 2024].

[2] ASTM Compass. ASTM D5338-15 Standard Test Method for Determining Aerobic Biodegradation of Plastic Materials Under Controlled Composting Conditions, Incorporating Thermophilic Temperatures. 2021. Accessed: Sept. 25, 2024. [Online.] Available: https://compass.astm.org/document/?contentCode=ASTM%7CD5338-15R21%7Cen-US

[3] Canadian Centre for Occupational Health and Safety. “Hand Tool Ergonomics - Health Hazards.” CCOHS. Accessed: Sept. 25, 2024. [Online.] Available: https://www.ccohs.ca/oshanswers/ergonomics/handtools/hazards.html

[4] Canadian Centre for Occupational Health and Safety. “Hand Tool Ergonomics – Tool Design.” CCOHS. Accessed: Sept. 25, 2024. [Online.] Available: https://www.ccohs.ca/oshanswers/ergonomics/handtools/tooldesign.html

[5] ECHO Instruments. “Respirometer.” Accessed: Sept. 25, 2024. [Online.] Available: https://echoinstruments.eu/respirometers/respirometer/

[6] Mechanical Education. “Pros and Cons of Stainless Steel.” Accessed: Sept. 25, 2024. [Online.] Available: https://www.mechanicaleducation.com/pros-and-cons-of-stainless-steel/

[7] KitchenAid. “KitchenAid Ultra Power Plus Series 4.5-Quart Tilt-Head Stand Mixer.” Accessed: Sept. 16, 2024. [Online.] Available: https://www.kitchenaid.ca/en_ca/countertop-appliances/stand-mixers/tilt-head-stand-mixers/p.kitchenaid-ultra-power-plus-series-4.5-quart-tilt-head-stand-mixer.ksm96er.html?originVariantsOrder=ER

[8] J. Bouchard. “How Does a Power Ratchet Work?” Accessed: Sep. 28, 2024. [Online.] Available: https://powertools.ingersollrand.com/en-ca/content-hub/how-does-a-power-ratchet-work#:~:text=They%20typically%20have%20a%20motor,%3A1%20and%206%3A1.

[9] Lowes. “Kobalt 24-volt Variable Speed Brushless 3/8-in Drive Cordless Impact Wrench (Bare Tool).” Accessed: Sept. 28, 2024. [Online.] Available: https://www.lowes.com/pd/Kobalt-Brushless-24-Volt-Max-3-8-in-Drive-Cordless-Impact-Wrench/1000061163.

[10] Dewalt. “20V MAX* XR® Brushless Cordless 3/8" & 1/2" Sealed Head Ratchet (Tool Only).” Accessed: Sept. 28, 2024. [Online.] Available: https://www.dewalt.ca/product/dcf510b/20v-max-xr-brushless-cordless-38-12-sealed-head-ratchet-tool-only.

[11] Home Depot. “RIDGID 18V Brushless Cordless 3/8 in. Ratchet (Tool-Only).” Accessed: Sept. 28, 2024. [Online.] Available: https://www.homedepot.ca/product/ridgid-18v-brushless-cordless-3-8-in-ratchet-tool-only-/1001707970

[12] R. N. Abbott. “Mohs hardness scale.” Appalachian State University Department of Geology. Accessed: Dec. 9, 2024. [Online.] Available: https://www.appstate.edu/~abbottrn/mnrl-id/mohs.html

[13] *Brushless Motor BLH Series Digital Setting Type Operating Manual*. Orientalmotor, July 2023. Accessed: Jan. 21, 2025. [Online]. Available: https://www.orientalmotor.com/products/pdfs/opmanuals/HP-5074-11E.pdf?_gl=1*a5udhg*_gcl_au*MjAzODAyNTczNi4xNzQyNTA0MzUw*_ga*MTYxMDc3NjM3OC4xNzQyNTA0MzUw*_ga_VV8FQHSH1R*MTc0MjUwNDM0OS4xLjEuMTc0MjUwNDM2OC40MS4wLjIzNzMxNTY4MQ.

[14] R. Krishnan, *Electric Motor Drives: Modeling, Analysis, and Control*, Upper Saddle River, NJ: Prentice Hall, 2001. [E-book] Available: Academia.edu.

[15] B. K. Bose, *Modern Power Electronics and AC Drives*, Upper Saddle River, NJ: Prentice Hall, 2003. [E-book] Available: Google

[16] P. Krause, O. Wasynczuk, S. Sudhoff, and S. Pekarek, *Analysis of Electric Machinery and Drive Systems*, 3rd ed. Hoboken, NJ: John Wiley & Sons, 2013. [E-book] Available: Google.

[17] Home Depot. "Tumbleweed Compost Aerator." Accessed: Sept. 27, 2024. [Online.] Available: https://www.homedepot.ca/product/tumbleweed-compost-aerator/1001565530?eid=PS_GOOGLE_D00_Corporate_GGL_Shopping_All-Products_All%20Products__PRODUCT_GROUP_pla-294357559827&gad_source=1&gclid=Cj0KCQjwmOm3BhC8ARIsAOSbapUmqGr4QlvNKnNbIeBfDNUv_9fK8MlD0gLdsW02U9prAtF6hb8IYC0aAkxQEALw_wcB&gclsrc=aw.ds

[18] Home Depot. "FreeGarden Compost Turner." Accessed: Sept. 27, 2024. [Online]. Available: https://www.homedepot.ca/product/freegarden-compost-turner/1000790101

[19] Amazon. "Stirring Composting Accessories - 33.4 Inch." Accessed: Sept. 27, 2024. [Online.] Available: https://www.amazon.ca/Stirring-33-4inch-Composting-Accessories-Black-33-4IN/dp/B0CTGCW7WV/ref=sr_1_6?crid=15P70HS78FTJD&dib=eyJ2IjoiMSJ9.gLknKslEW4MT4_4xkgKNC4Of88Wl4ea9v6wrU43AgLOY2k78g9-zIoVrNNjhrlSE1jiRpF-zUulg5aYmUUNZ2tm-lfQcP95SOkt-PlEaaVD4iXxInqLHy_vDUPbLMZ6u6bdvpnj44WVke0ExTDwcC-_xnX2XUZgBY4xo3FwE8C3qhw7jhApwSLEaYDs4_j8QXYkEdMZ_YrLjmuppyAMUJaAm_-bYFJ5QU9FjbdLdtg0M4oZRpGUYZCd-Mrl1Tz3XItHE_Igiey1X_KwtRANSkqMvYqz7b_211o3U84TxuKs.PZFWXsamBDNNZ5o1gmq9RAKgssbi9f1OUB7o5SyBrS0&dib_tag=se&keywords=compost%Lowes, "Kobalt Kobalt 24-volt Variable Speed Brushless 3/8-in Drive Cordless Impact Wrench (Bare Tool)",

Kobalt. ttps://www.lowes.com/pd/Kobalt-Brushless-24-Volt-Max-3-8-in-Drive-Cordless-Impact-Wrench/10000611632Bturner&qid=1727752969&sprefix=compost%2Bturner%2Caps%2C716&sr=8-6&th=1

[20] Amazon. "Compost Stirring Attachment for Turning Compost, Garden Soil." Accessed: Sept. 27, 2024. [Online.] Available: https://www.amazon.ca/Compost-Stirring-Attachment-Turning-Outdoor/dp/B0CZJKLYFH/ref=sr_1_11?crid=15P70HS78FTJD&dib=eyJ2IjoiMSJ9.gLknKslEW4MT4_4xkgKNC4Of88Wl4ea9v6wrU43AgLOY2k78g9-zIoVrNNjhrlSE1jiRpF-zUulg5aYmUUNZ2tm-lfQeP95SOkt-PlEaaVD4iXxInqLHy_vDUPbLMZ6u6bdvpnj44WVke0ExTDwcC-_xnX2XUZgBY4xo3FwE8C3qhw7jhApwSLEaYDs4_j8QXYkEdMZ_YrLjmuppyAMUJaAm_-bYFJ5QU9FjbdLdtg0M4oZRpGUYZCd-Mrl1Tz3XItHE_Igiey1X_KwtRANSkqMvYqz7b_211o3U84TxuKs.PZFWXsamBDNNZ5o1gmq9RAKgssbi9f1OUB7o5SyBrS0&dib_tag=se&keywords=compost+turner&qid=1727752969&sprefix=compost+turner%2Caps%2C716&sr=8-11

Appendix

Appendix A: Instruction Manual and Safe Work Procedures

This section describes the proper use of the mixing device to ensure it is used safely and effectively. The set up prior to using the mixing device, weekly mixing, and clean up after completing an experiment are described as well as general maintenance and safety information. Figure A1 shows the mixing device with all the key parts labelled.

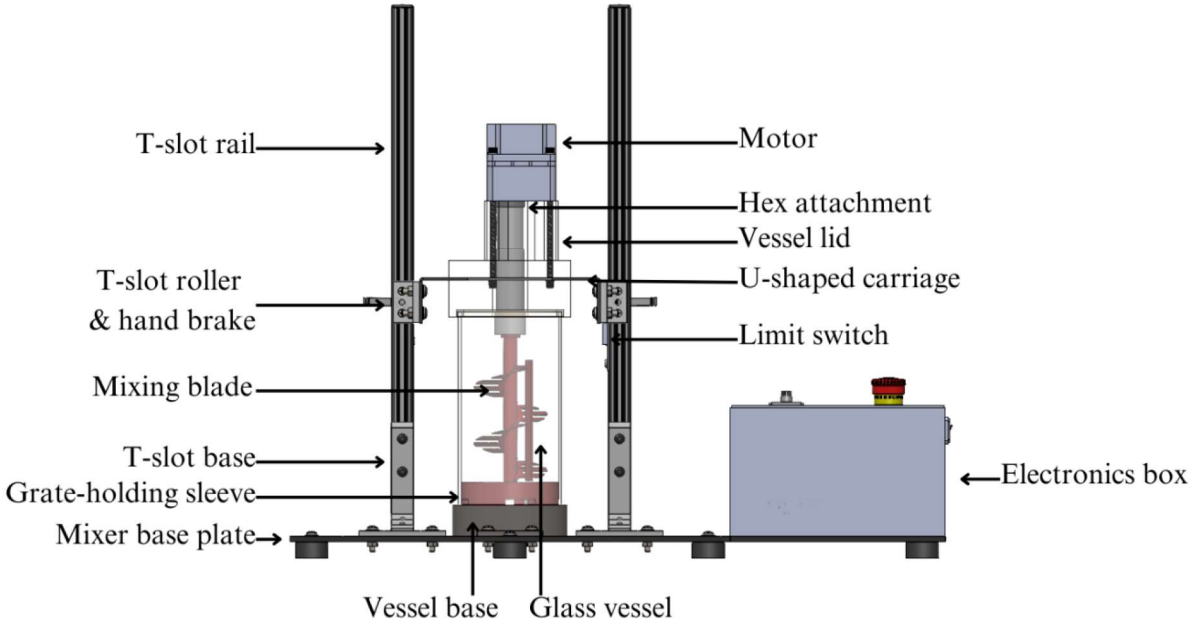

Figure A1. Labelled components of the compost mixing device

Safety and ergonomic features

The compost mixer design includes features designed to improve safety during the mixing process and prevent injuries. The main safety features, identified in Figure A1 are the limit switch and the red emergency button.

The limit switch is located slightly below the top of the glass. The limit switch is depressed when the vessel lid has been fully lowered and the mixing blade is fully confined, ensuring that the lid is lowered before the motor can begin rotating. If the limit switch is suddenly released the motor will immediately stop rotating and the power switches will need to be turned off before the mixer can be operated again. This eliminates significant risks posed by the spinning steel blade by separating it from the user while the motor is in use.

The other key safety component is the red emergency stop button. When pressed, the red emergency button will immediately cut both AC and DC power to the mixer, which turns off all power and stops the motor from spinning. This button is designed to be used only in the case of an emergency and should not be used to regularly stop the mixer. If the emergency button is pressed both switches must be turned off and the emergency button must be reset before the mixer will run again. To reset the emergency button, twist it clockwise until it pops back into its original position.

The mixing design reduces the risk of hand and wrist stain posed by manual mixing. Manual mixing requires prolonged, concentrated manual output from the users dominant hand which can cause injuries. While raising and lowering the lid and motor requires some manual force, the force is evenly distributed on both arms and uses larger muscle groups in the arms and shoulders. The operator also gets a break to rest while each vessel is being mixed which improves ergonomic safety by reducing the risk of injury.

Set up prior to beginning 90-day experiment:

- Ensure all parts of the internal mechanism are clean and dry
    - Grate holding sleeve
    - Metal grate and center rod
    - Mixing blade
- Place the metal grate holding sleeve around the bottom of the grate, ensuring all four feet are covered by the bottom as shown in Figure A2 (a).
- Carefully place these into the vessel and slowly apply even pressure to the grate to push it to the bottom, ensuring the grate stays level as shown in Figure A2 (b) and (c).
- Adjust the grate using the center rod if the grate is not level as shown in Figure A2 (d).

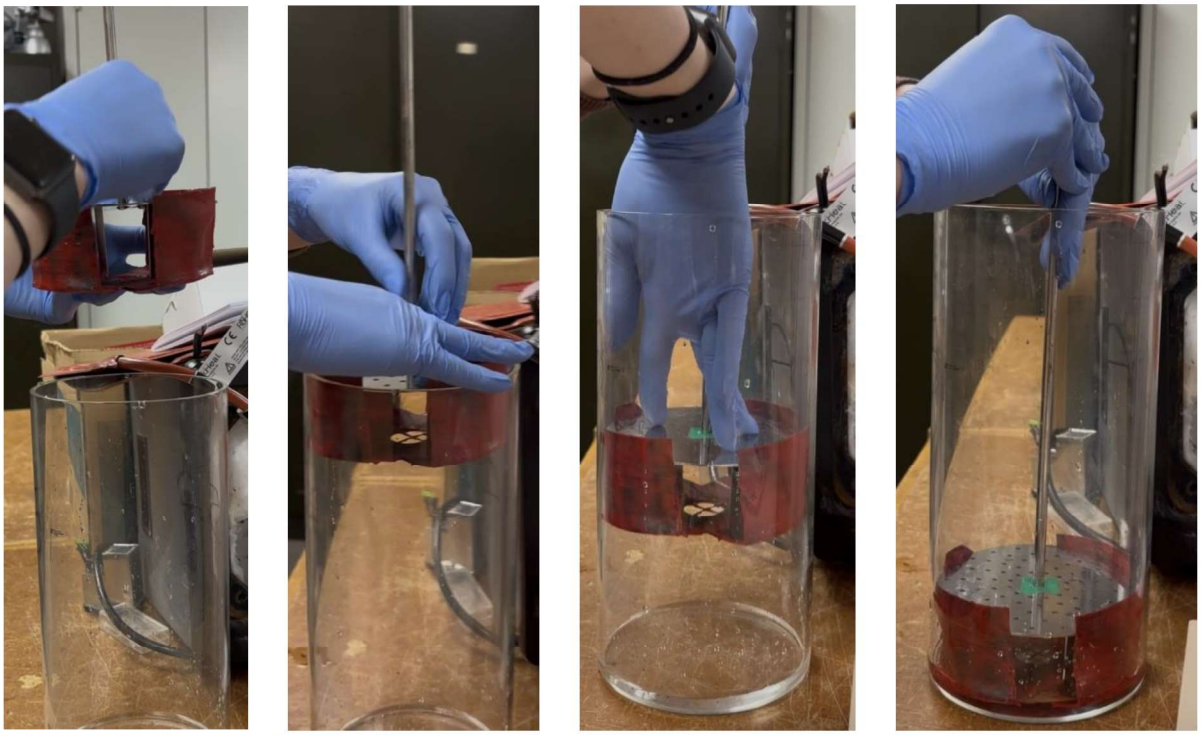

Figure A2. Pictures showing the process of putting the sleeve on the metal grate (a), inserting it into the vessel (b), pushing it to the bottom (c), and adjusting the grate to level it (d)

- To put the mixing blade into the vessel, guide it over the center post with the hex nut attachment facing up as shown in Figure A3.

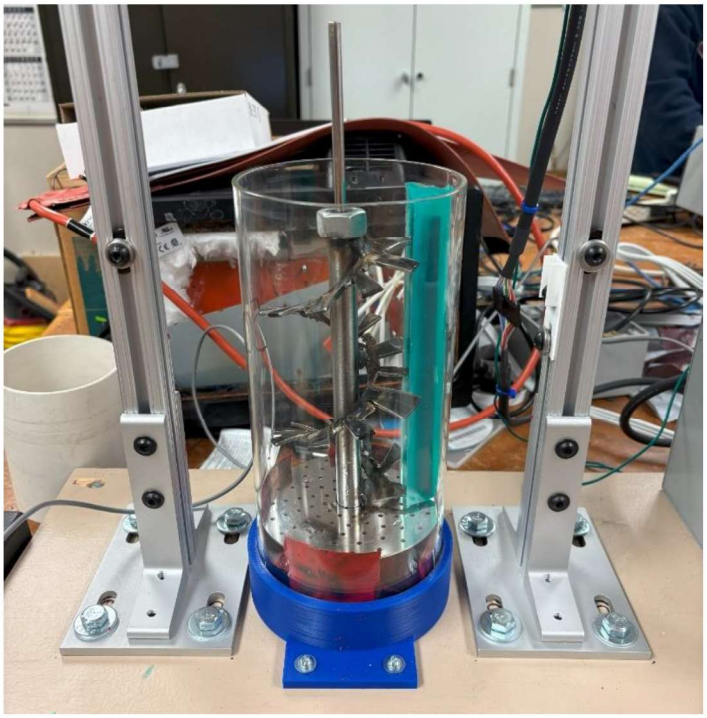

Figure A3. mixing blade correctly placed in the vessel with the hex nut attachment facing up

- Once these components are assembled, the water and compost to be used for the experiment can be added and the ECHO instruments lid can be secured to begin the experiment.

During 90-day experiment:

To begin the weekly mixing process, first ensure the mixing device is properly set up

- Make sure the device is turned off and plug it into the wall outlet
- Ensure the motor and lid are in the raised position and the hand brakes are secured
- Ensure the silicone base is properly aligned in the bottom of the vessel base

Then the following steps can be followed for each vessel that needs to be mixed

- Remove the bolts, washers, and springs so the ECHO Instruments respirometer lid can be removed
- Place the glass vessel in the vessel base, on top of the silicone base as shown in Figure A4.

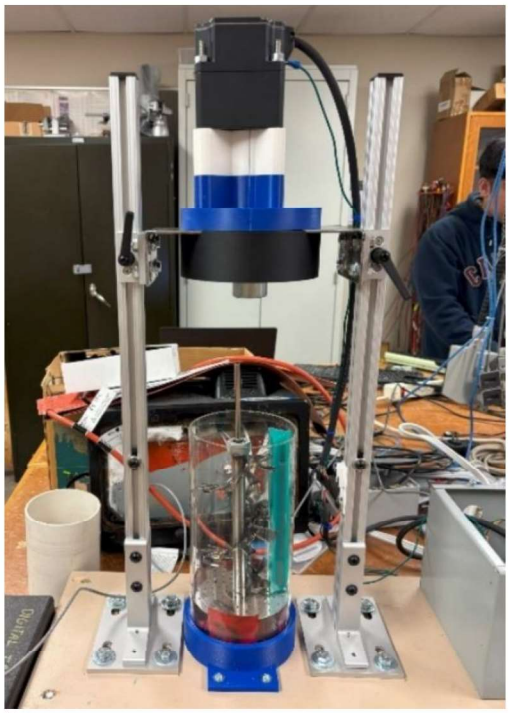

Figure A4. Picture of the glass vessel in the vessel base with the motor and lid locked in the raised position

- Turn the glass vessel to align the hex nut with the hex socket
- Release the hand brakes and slowly lower the motor and lid, ensuring the hex nut and socket are still aligned

- Engage the hand brakes by turning them clockwise to secure the lid on the vessel as shown in Figure A5.

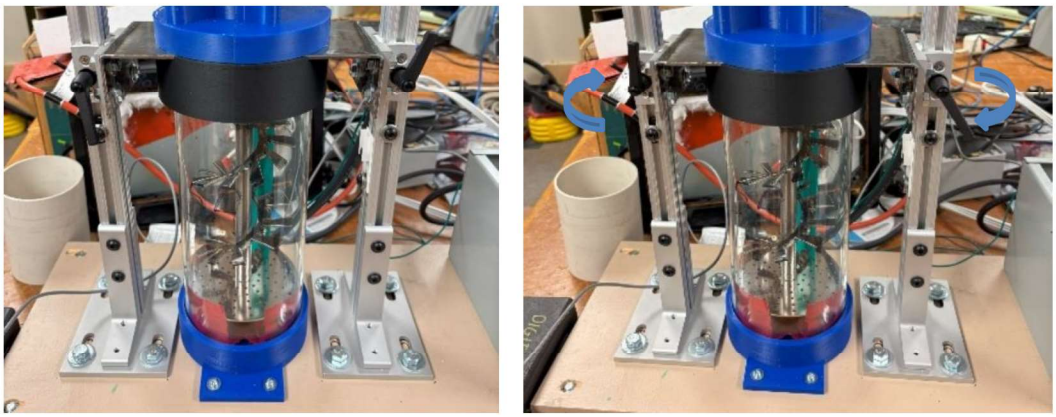

Figure A5. Pictures showing the lid lowered onto the vessel with the hand breaks released (left) and engaged (right)

- Once the lid is lowered all the way onto the glass vessel the T-slot roller should be in contact with the limit switch. The limit switch needs to be engaged in order for the mixing device to be operated, as this ensures the lid is secured over the opening of the vessel, and the hazard posed by the blade is contained away from the operator.
- Ensure the speed is set to the lowest setting and then turn on the device using the power switch and the run switch as shown in Figure A6.



Figure A6. Picture of the power switch (left) and run switch (right) turned on

- Increase the speed as required using the potentiometer dial shown in Figure A7, considering the consistency of the compost. Higher speeds may be required for compost that has a moist or sticky consistency while lower speeds can be used for drier crumbly compost



Figure A7. Picture showing the potentiometer dial used to adjust the mixing speed

- Let the mixing device run for at least 2 minutes (longer mixing durations can be used at the discretion of the operator)
- After mixing, the speed should be lowered before the switch is turned off
- Then the hand brakes can be released, the motor and lid raised, and the hand brakes re-engaged in the raised position
- Remove the vessel from the mixing device and reassemble the ECHO Instruments respirometer, securing the lid with the nuts, washers, and springs

This can be repeated for each vessel. After all vessels have been mixed any compost that was dropped onto the mixing device or baseplate can be brushed off to prevent moisture or microbes from accumulating. The process can be sped up by using the mixing time to remove and re-assemble the respirometer lids of the other vessels.

After completing 90-day experiment

- Once the experiment has been completed and the vessels are ready to be emptied the compost and internal components can be removed from the glass vessel
- The internal components (grate holding sleeve, metal grate, center rod, and mixing blade) can be cleaned using water and the same methods used for the glass vessel and center rod
- Ensure the internal components are clean and dry before they are put into storage or put back in the vessel for the next experiment

Appendix B: Project-Specific Material

B.1 Current Market Designs of Compost Tools

This section reviews these options for their suitability in addressing the NRC's compost mixing needs.

Compost tools

Most compost tools are manually operated stirring sticks; however, others have attachments compatible with external actuators like drills. Common designs, shown in Figure B1, feature a cylindrical pole frame and a blade for uniform mixing of compost media. While these designs meet the client's goal of effectively mixing compost, the client prefers an automated solution to reduce manual labor.



Figure B1 – Different designs of market compost tools: a, b, and c are manual stirring sticks, while d is a drill-operated stirring stick [17, 18, 19, 20 respectively]

KitchenAid stand mixer

The team considered the KitchenAid stand mixer for its high level of automation and minimal operator input, which align with the client's main goals. Most mixers use a planetary orbit and rotation mechanism with ten speed settings to mix various consistencies [7]. Despite these features, this solution is unsuitable for NRC due to the shape and material of the mixing utensils, the inability to secure the vessel, and lack of safety features.

Power ratchets

The clients recommended exploring power ratchets as a mechanism for rotating a custom mixing blade. There are two common forms of power ratchets: electric and pneumatic [8]. The electric power ratchet uses the widely adopted battery system that allows one battery pack to power multiple tools. In contrast, the pneumatic power ratchet relies on compressed air, which conflicts

with the client's requirements. Additionally, the average battery powered ratchets operate around ~90 dBA, 0-400 RPM, 55-150 ft./lbs [9, 10, 11]. While speed and torque are enough to provide power to an internal mixing mechanism, its noise level exceeds the client's maximum noise threshold of 87 dBA.

B.2 Internal Mechanism Prototypes

Table B2. Features, observations, and performance of four internal mechanism prototypes

Prototype	Features	Challenges or Observations	Performance
Prototype 1  Figure B2	- 4-inch continuous auger	- Compost stuck to vessel walls - Clumps carried upward because of no perforations	- Design without perforations resulted in clumping and uneven mixing, leading to poor performance
Prototype 2  Figure B3	- 4.4-inch perforated interrupted flight auger - Rubber bar to scrape glass walls - Plastic bushing for alignment	- Compost clumps carried upward despite perforations - High friction caused by rubber bar scraping the glass walls - Friction between plastic bushing and perforated plate	- Perforations were insufficient to break clumps effectively - Friction increased torque demand, reducing efficiency

Prototype	Features	Challenges or Observations	Performance
Prototype 3  Figure B4	- 4-inch perforated interrupted flight auger - Rubber scraping bar - Larger perforations for improved mixing	- Compost clumped on auger surface when mixing paused, causing material to stick - Removing clumps from the auger was difficult if left idle in the vessel	- Interrupted flights moderately improved mixing slightly but clumping on the auger remained an issue
Prototype 4  Figure B5	- 4-inch segmented interrupted flight auger - Sealed metal bearings for alignment to reduce friction - Squeegee with sharp rubber edge clamped between metal sheets to improve wall scraping and reduce friction	- No major issues observed - Compost lifted by the auger fell back, improving vertical mixing	- Segmented flights broke clumps effectively - Sealed metal bearings reduced friction - Squeegee minimized torque demand - This prototype achieved the best performance

B.3 Technical Specifications of Electrical Components

Table B3. Electrical components technical specifications

Type	Helpful Specifications
Outlet input voltage and current	120 VAC
Outlet input current	15 A
Motor type	BLH Series Brushless DC Motor (cable type)
Motor gearhead	Parallel Shaft Gearhead 50:1 (GFS4G)
Motor driver	Digital Board-type
Motor power input	DC
Motor mass	1800 g
Motor rated torque	72 lb-in

Motor speed control range	80 to 3000 r/min
Motor reduced speed range	1.6 ~ 60 r/min
Motor power supply voltage	24 VDC
Motor output power	50 W (1/15 HP)
Motor calculated maximum current	2.083 A
Motor frame size	3.15 in
Motor output shaft diameter	0.591 in
Motor driver mass	46 g
Motor driver calculated maximum current	4.167 A
Mounting bracket mass	210 g
External potentiometer resistance	20 kΩ
External potentiometer output power	¼ W
Power supply AC/DC adapter output voltage	24 VDC
Power supply AC/DC adapter output current	10 A
Power supply AC/DC adapter input voltage	100-240 VAC

B.4 Brushless DC Motor Selection Rationale

The team selected a DC motor instead of a stepper motor due to the following factors specific to the project's requirements:

1. Speed control: A DC motor offers a smooth and continuous speed control across a wide range of speeds using either a pulse width modulation (PWM) signal or voltage/speed controller [14]. This is ideal for applications when fine speed control is needed. In comparison, a stepper motor has discrete, fixed step increments making it less efficient at higher speeds [15]. Stepper motors excel in applications requiring precise position control which is not required for this project.
2. Torque Characteristics: A DC motor offers high starting torque, which is essential for this project [15]. In comparison, a stepper motor delivers constant torque at lower speeds.
3. Cost and Integration: A DC motor is generally less expensive and simpler to control. It is also easier to integrate into a circuit, reducing system complexity [14].

Furthermore, the team chose a brushless DC motor, which utilizes electronic commutation and lacks brushes, over a brushed DC motor, which uses brushes and a commutator. The primary advantage of a brushless motor is its higher efficiency [15], making it more suitable for high-performance applications. Brushless motors also deliver better torque performance, offering

constant torque across a wide range of speeds [16]. Additionally, brushless motors require minimal maintenance because they do not have brushes that wear out over time and need replacement [16, 14].

B.5 Methods for Determining Torque and Speed Requirements

Initially, the team powered the system with a Makita BDF453H ½" Cordless Driver Drill, which provides a maximum torque of 340 inch-pounds. At lower speed settings, the drill provided sufficient torque to successfully mix the compost media. The drill offers 16 clutch settings, each delivering a fraction of the total torque. For instance, the team set the drill to the third clutch setting and calculated the estimated torque output to be 63.75 inch-pounds as follows:

$$\left(\frac{340\ in.lbs.}{16}\right) \times 3 = 63.75\ in.lbs. \quad (1)$$

Additionally, the team directly measured torque using a torque wrench meter. The team adjusted the wrench through several torque settings, starting at 0 inch-pounds and increasing until it "clicked" at 40 inch-pounds. After recording this value, the team added a 50% safety margin to account for potential inconsistencies in the procedure, resulting in a final torque estimate of 60 inch-pounds.

Furthermore, the team counted the number of rotations produced by the Makita drill to estimate the required RPM for the compost mixing system, determining an optimal range of 40-90 RPM. Thus, the established torque of 60 inch-pounds and the RPM range of 40-90 were identified as the ideal operating conditions for the mixing blade.

B.6 Equations for S2.1

$$Concentration = \frac{\#\ of\ beads}{volume\ of\ compost} \quad (2)$$

$$Total\ C_{expected} = \frac{200\ beads}{1\ L} = \frac{50}{250\ mL}$$

$$Blue\ C_{expected} = \frac{100\ beads}{1\ L} = \frac{25}{250\ mL}$$

$$Orange\ C_{expected} = \frac{100\ beads}{1\ L} = \frac{25}{250\ mL}$$

$$Total\ C_{test} = \frac{\#\ beads}{250\ mL}$$

$$Blue\ C_{test} = \frac{\#\ blue\ beads}{250\ mL}$$

$$Orange\ C_{test} = \frac{\#\ orange\ beads}{250\ mL}$$

$$\%\ error = \frac{\left|C_{test} - C_{expected}\right|}{C_{expected}} x100 \quad (3)$$

B.7 Ideal Large Scale Manufacturing Processes for Design Components

Table B7. Manufacturing process versus prototype process for individual design components

Individual Design Component	Prototype Process	Manufacturing Process
Internal Mechanism – Wiper Blade	At-home silicone molding	Custom silicone injection molding
Grate-Holding Sleeve	3D Printed out of TPU and coated with silicone	Custom silicone injection molding
Top- Part and Bottom-Part of Lid	3D Printed out of PLA	Teflon resin shaping through molding
Vessel Base	3D Printed out of PLA and coated with silicone	Teflon resin shaping through molding
Bushing Guard (between Mixing Blade and Grate)	Manufactured from plastic	Teflon resin shaping through molding

ITEM NO.	DESCRIPTION	QTY.
1	Glass Vessel	1
2	Center Grate & Sleeve Assembly	1
3	Mixing Blade Auger Assembly	1
4	Shaft, Motor & Lid Assembly	1
5	Machine Base Assembly	1
6	Left Side T Slot Rail	1
7	Right Side T Slot Rail	1
8	Hand Brake	2
9	Washer	18
10	Pan Head Philips Screw	18
11	Hex Nut	18
12	End-Feed Nut and Button Head	8
13	Limit Switch and Attachment	1
14	Bumper	8
15	Motor & Control Assembly	1

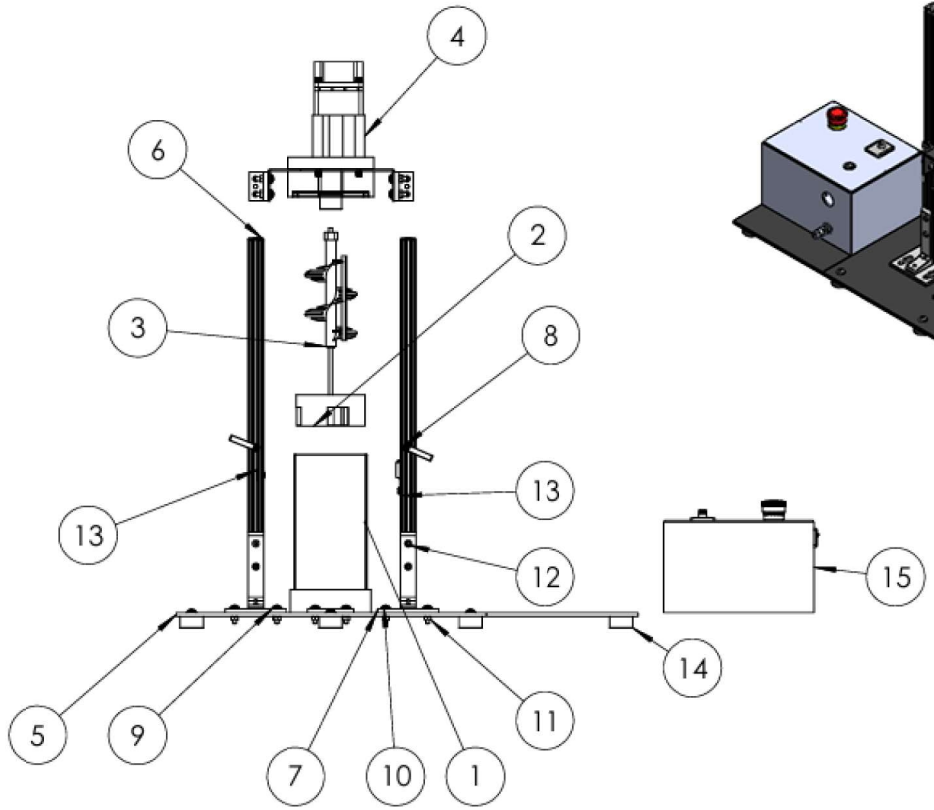

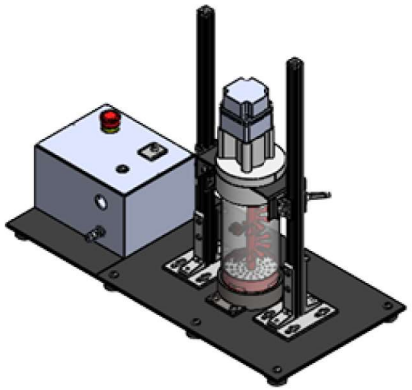

Team 6	NRC
Full Assembly	Title: Vessel Assembly Machine
Capstone Project	

ITEM NO.	DESCRIPTION	QTY.
1	Center Rod & Grate with 4 legs	1
2	Grate-Holding Sleeve	1

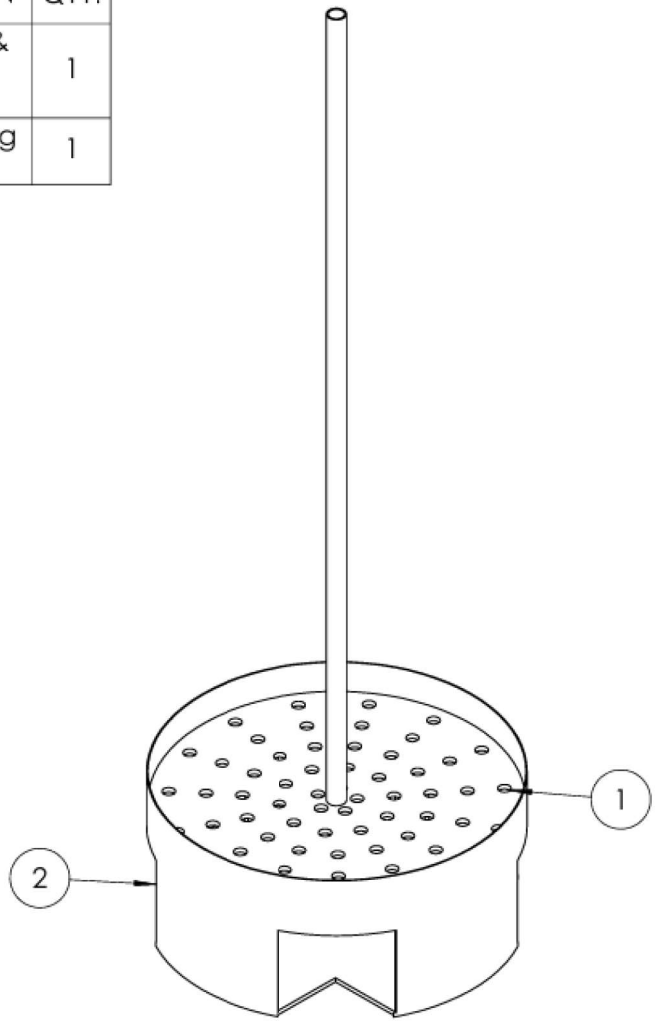



Team 6	NRC
Assembly	Title: Center Grate & Sleeve
Capstone Project	

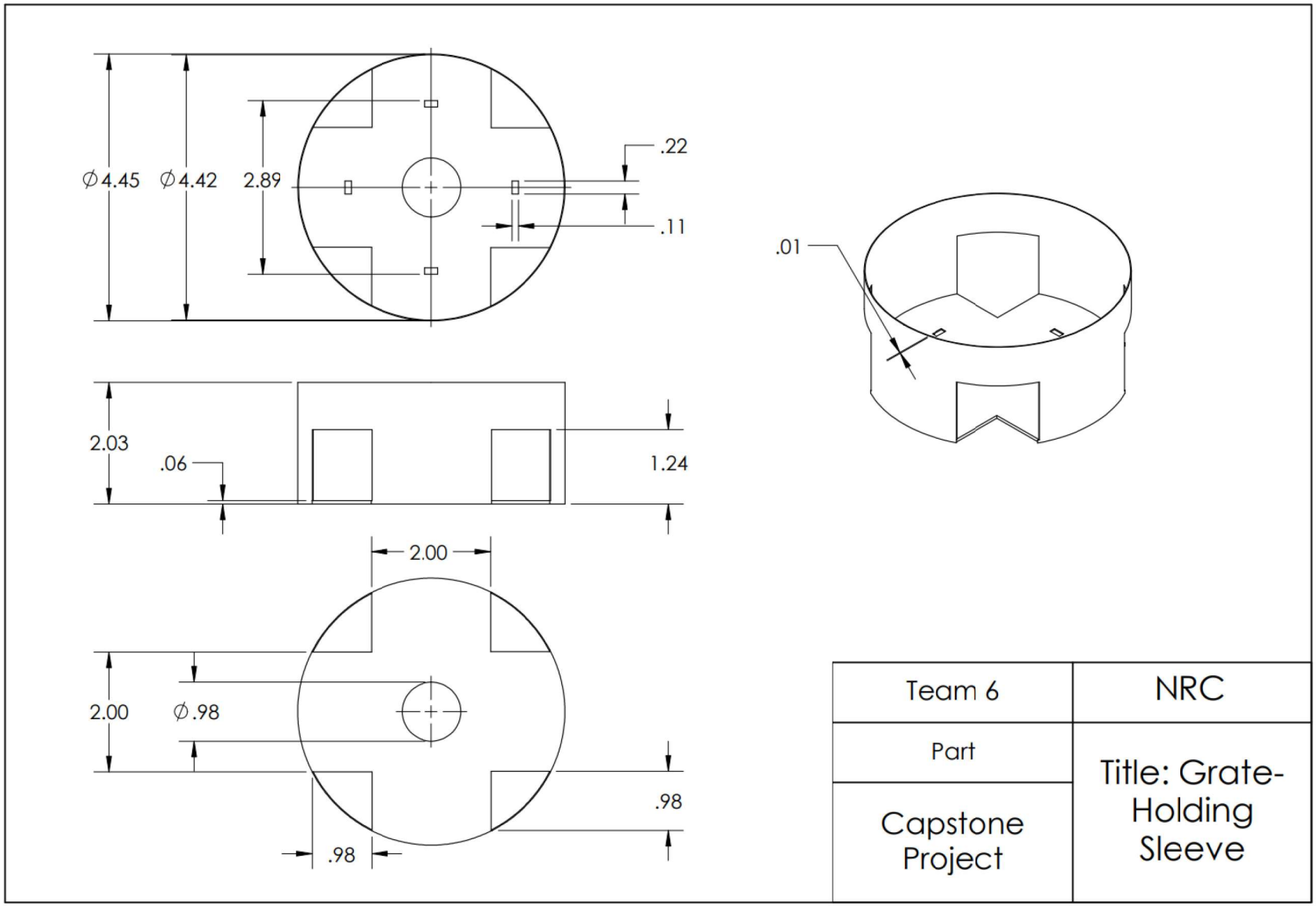
Ø4.45
Ø4.42
2.89
.22
.11
.01
2.03
.06
1.24
2.00
2.00
Ø.98
.98
.98
Team 6
NRC
Part
Capstone Project
Title: Grate-Holding Sleeve

ITEM NO.	DESCRIPTION	QTY.
1	Auger	1
2	Ultra-Low-Friction Dry-Running Sleeve Bearing	1

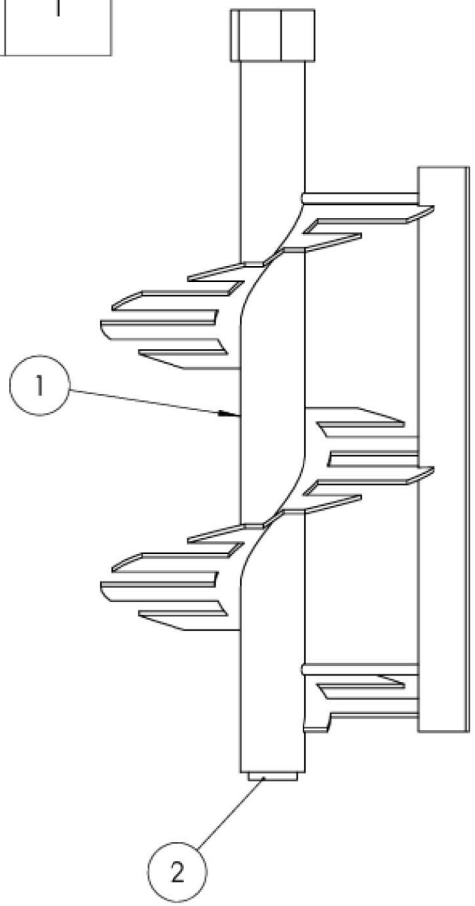

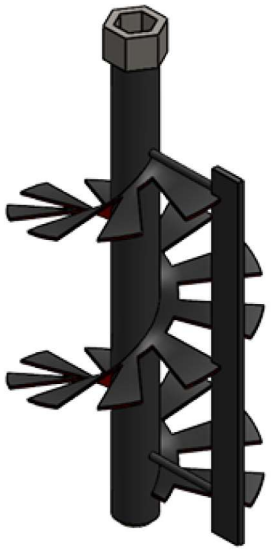

Team 6	NRC
Assembly	Title: Mixing Blade Auger
Capstone Project	

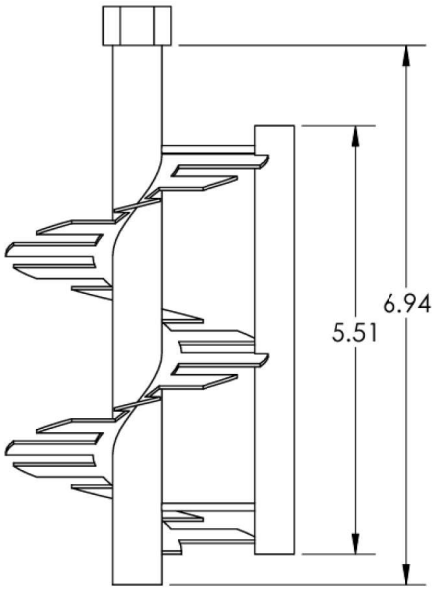

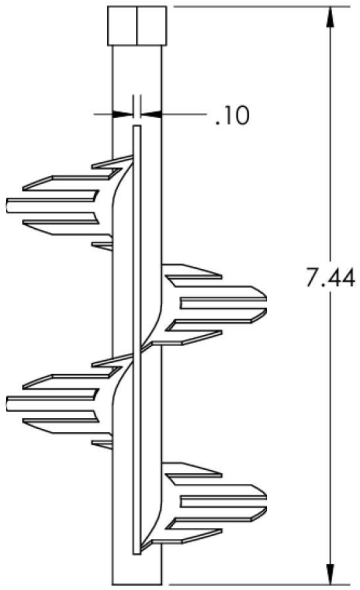

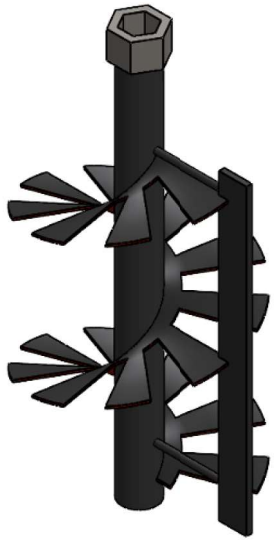

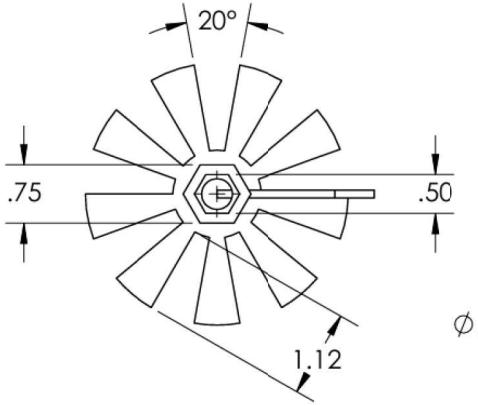

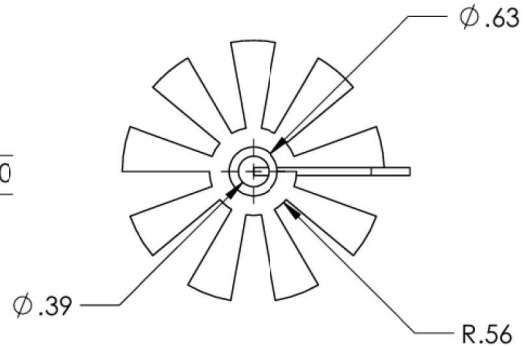

Team 6	NRC
Part	Title: Mixing Blade Auger
Capstone Project	

ITEM NO.	DESCRIPTION	QTY.
1	Motor	1
2	Lid Assembly	1
3	Hex Nut	8
4	Pan Head Philips Screw	8
5	Washer	8
6	Mounting Bracket Washer	4
7	Socket Head Screw	4
8	Hex Shaft & Steel Collar Assembly	1
9	Sleeve Bearing Carriage	2

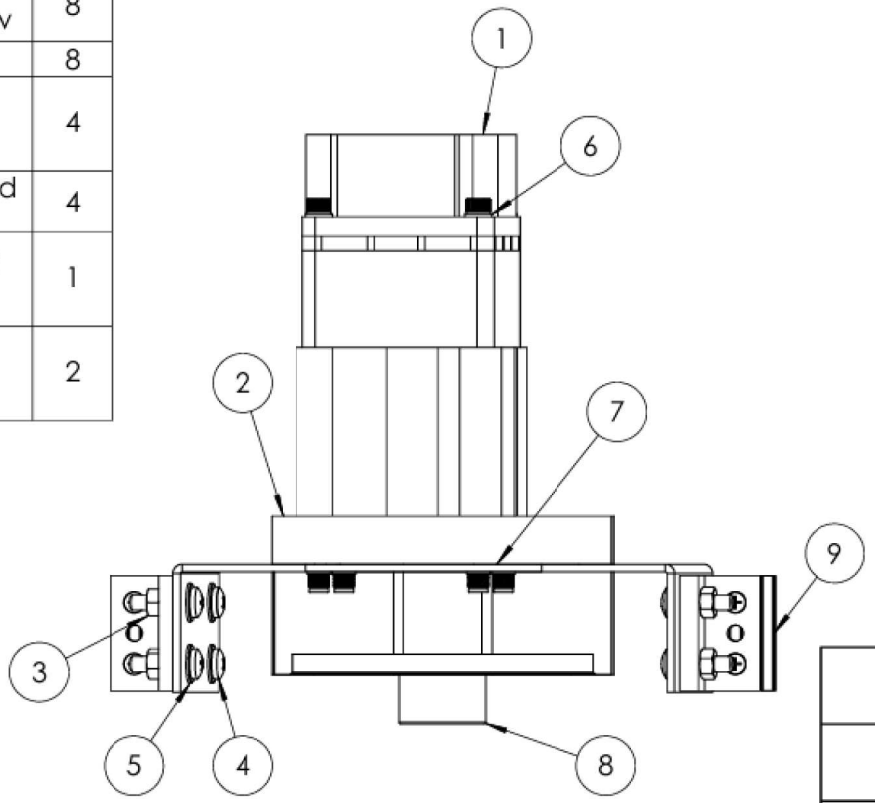

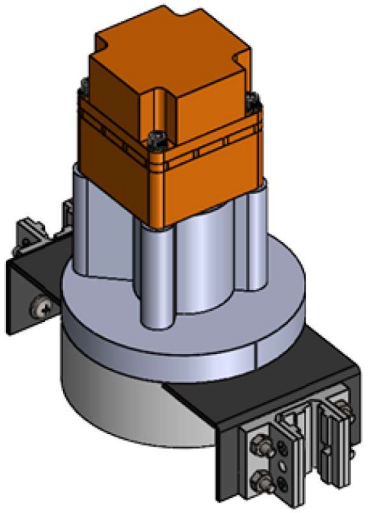

Team 6	NRC
Assembly	Title: Shaft, Motor & Lid
Capstone Project	

ITEM NO.	DESCRIPTION	QTY.
1	Vessel Lid - Top	1
2	Vessel Lid - Bottom Seal	1
3	Heat-Set Inserts	4
4	Vessel Lid - Bottom	1
5	Carriage Motor Connection Bracket	1

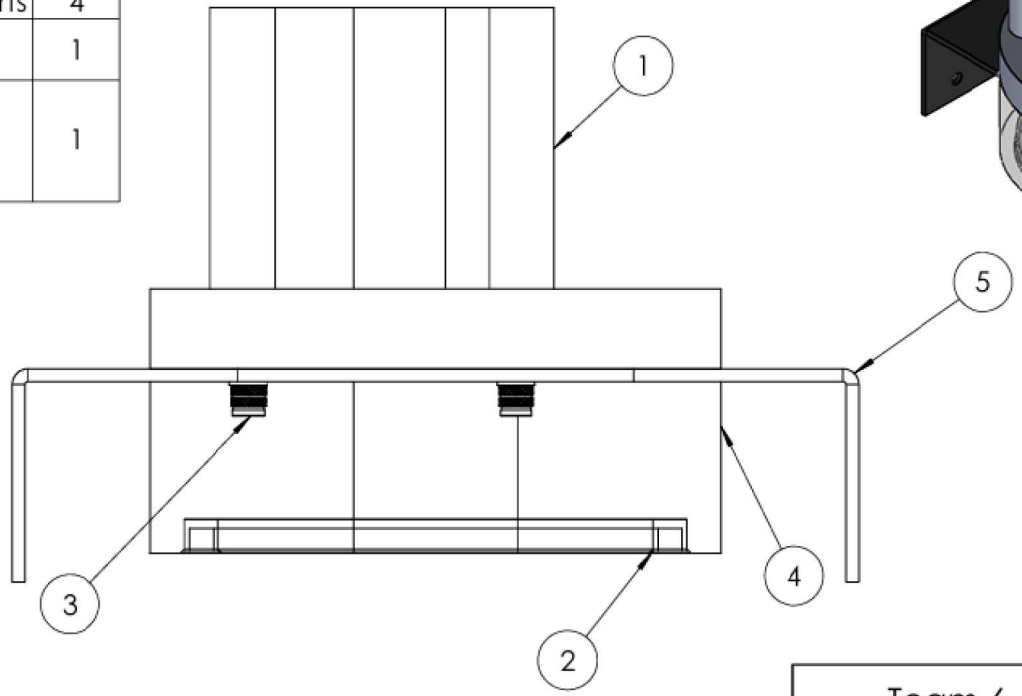

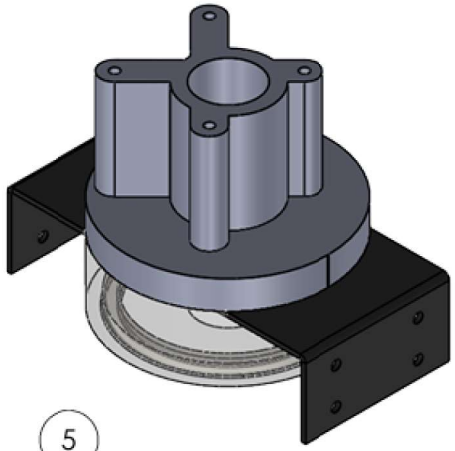

Team 6	NRC
Assembly	Title: Lid
Capstone Project	

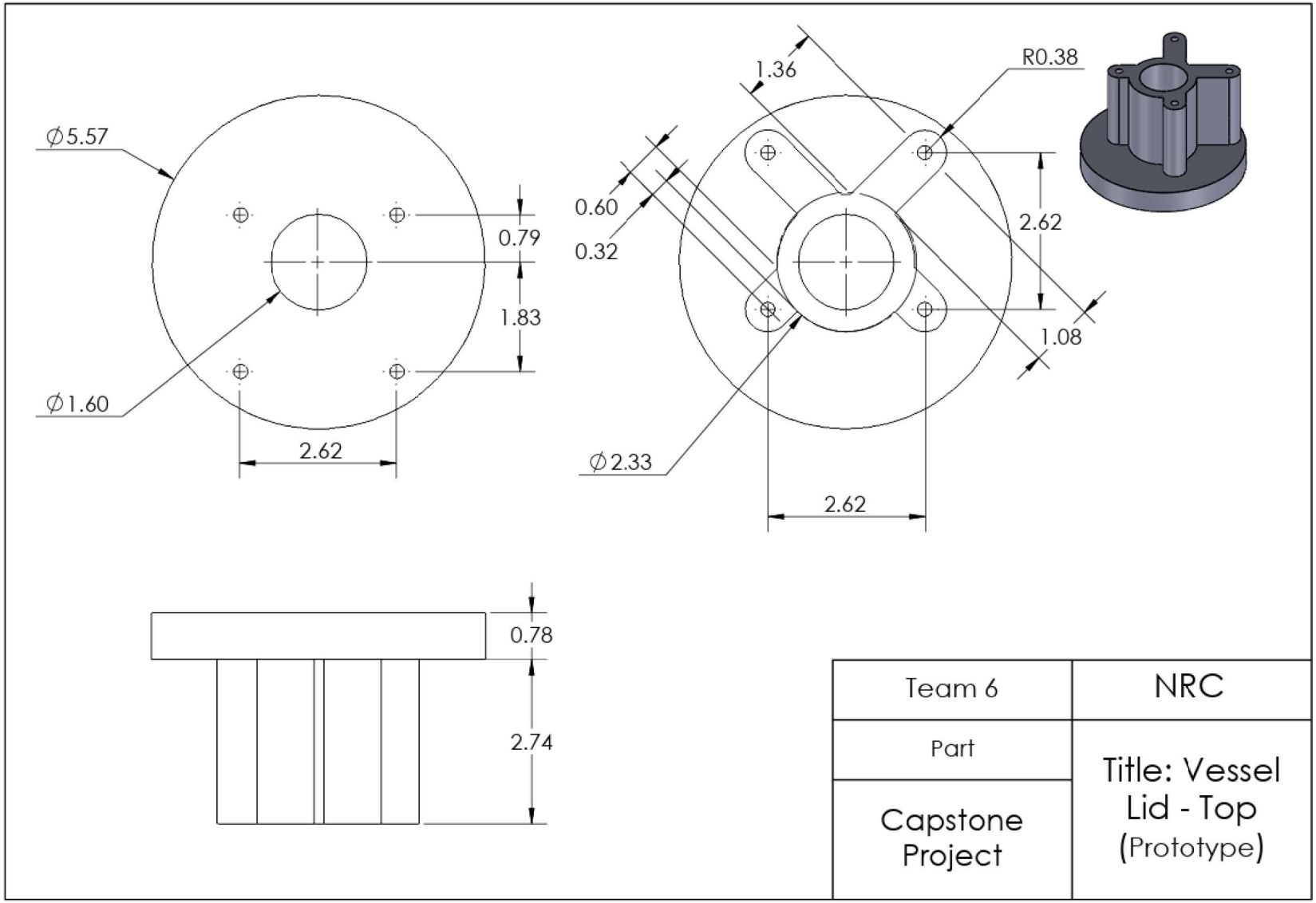
∅5.57
0.79
1.83
∅1.60
2.62
1.36
R0.38
0.60
0.32
2.62
1.08
∅2.33
2.62
0.78
2.74
Team 6
NRC
Part
Capstone Project
Title: Vessel Lid - Top (Prototype)

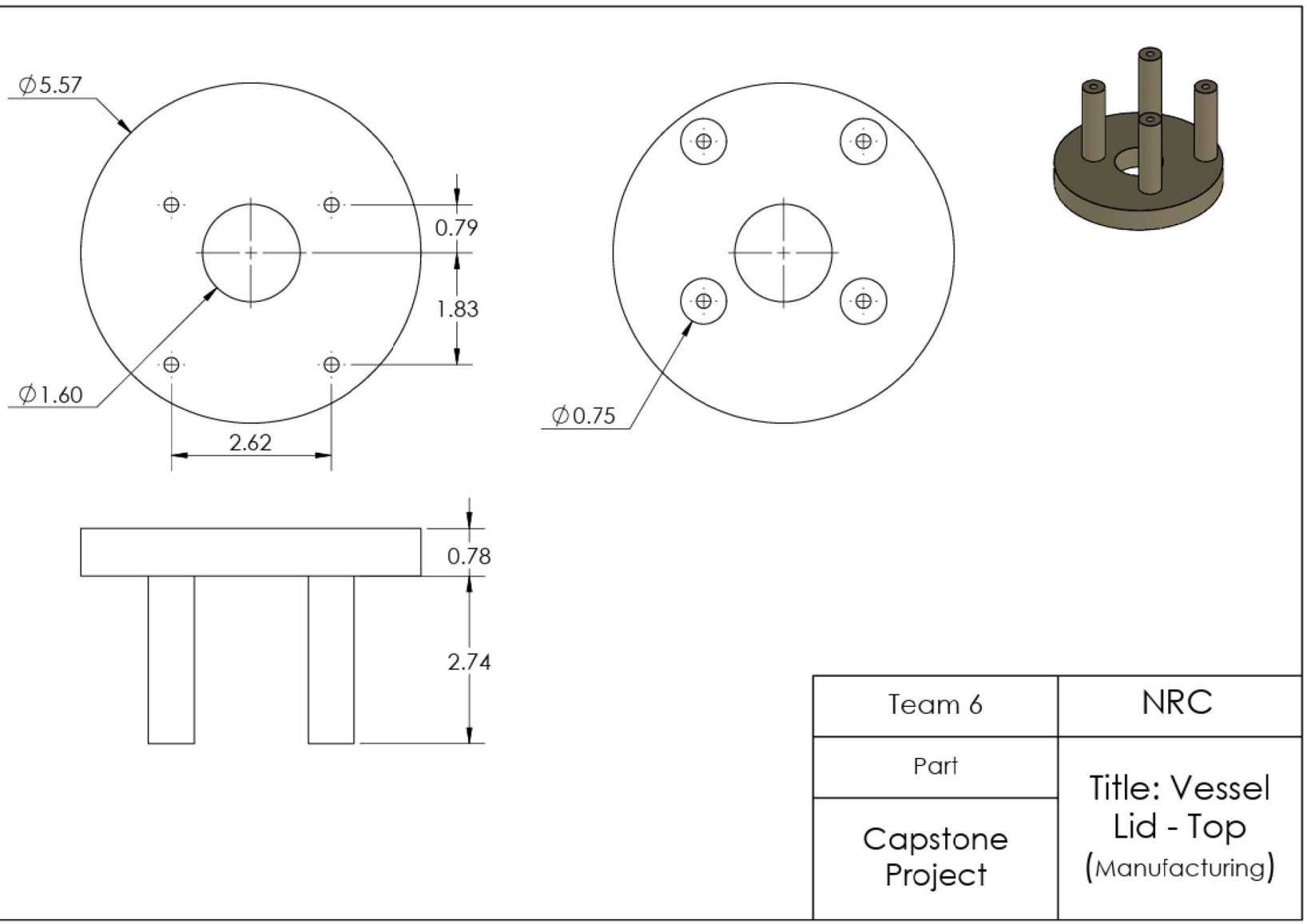

Team 6	NRC
Part	Title: Vessel Lid - Top (Manufacturing)
Capstone Project	

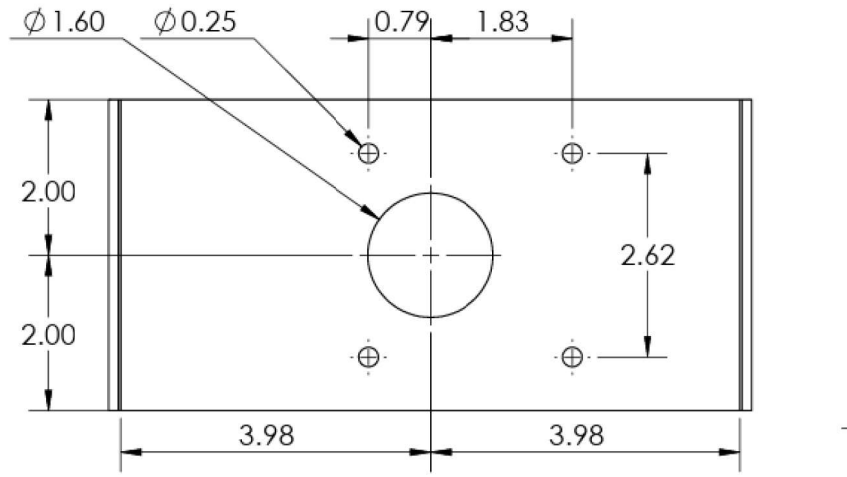

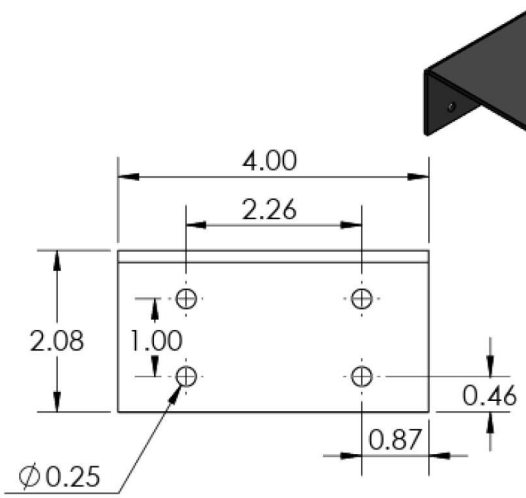

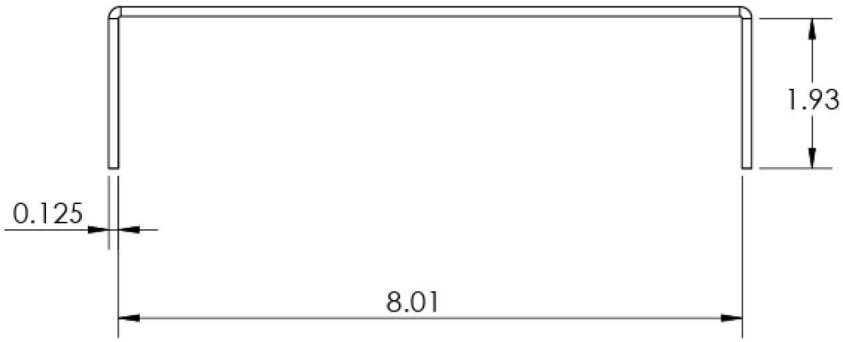

Team 6	NRC
Part	Title: U-Shaped Carriage
Capstone Project	

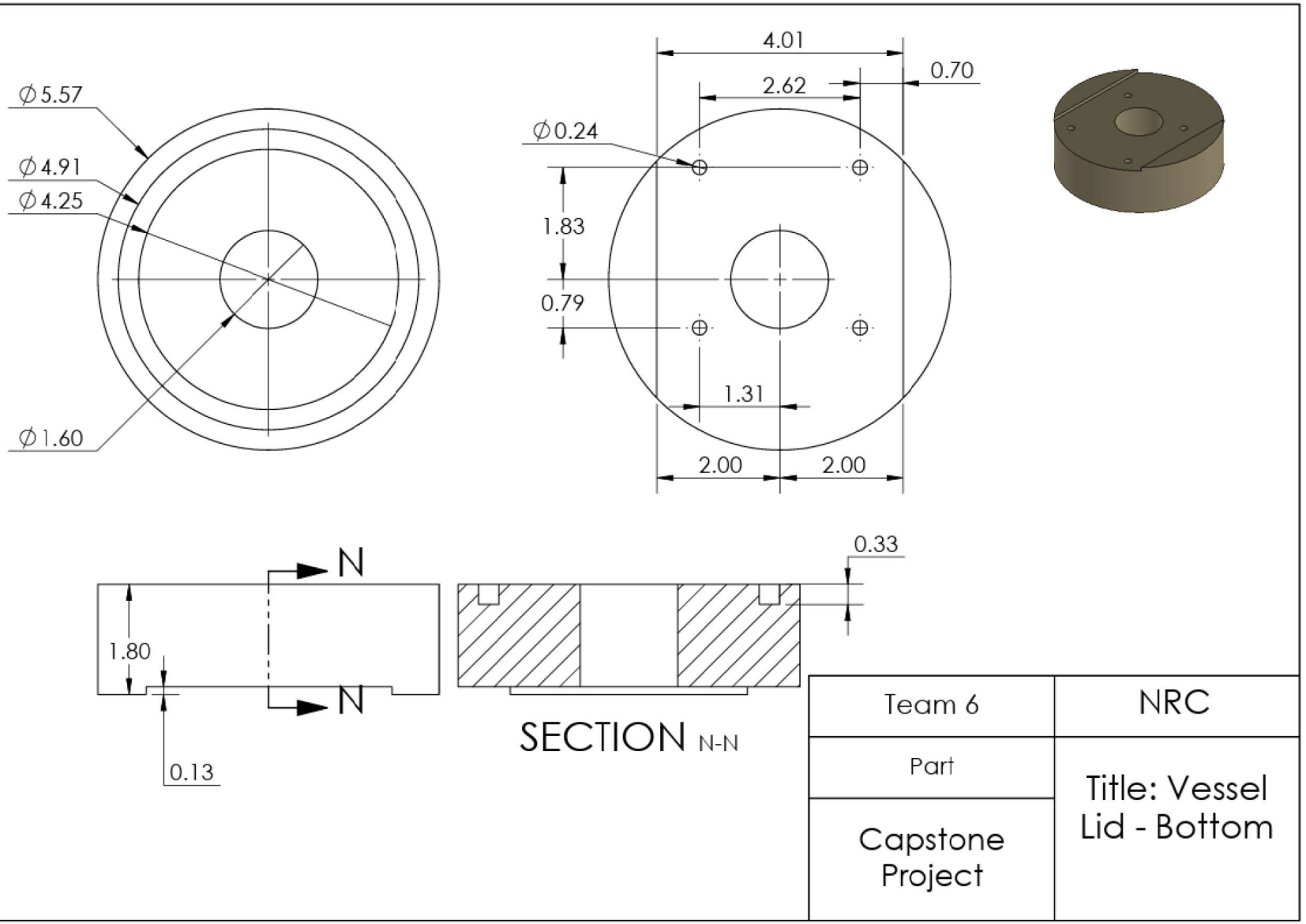
∅5.57
∅4.91
∅4.25
∅1.60
4.01
0.70
2.62
∅0.24
1.83
0.79
1.31
2.00
2.00
N
N
1.80
0.13
0.33
SECTION N-N
Team 6
NRC
Part
Title: Vessel Lid - Bottom
Capstone Project

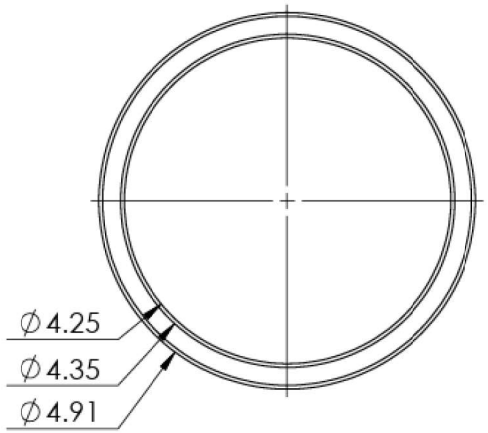

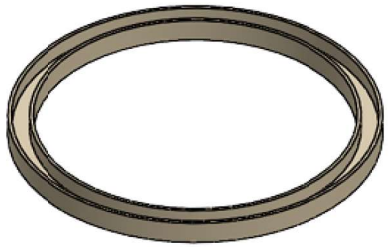

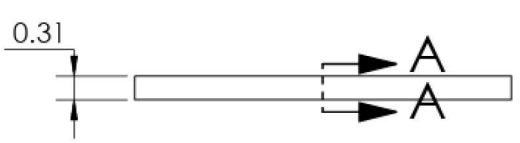



SECTION A-A

Team 6	NRC
Part	Title: Vessel Lid - Bottom Seal
Capstone Project	

ITEM NO.	DESCRIPTION	QTY.
1	Set Screw Shaft Coupling	1
2	Extra-Deep 6-Point Socket	1

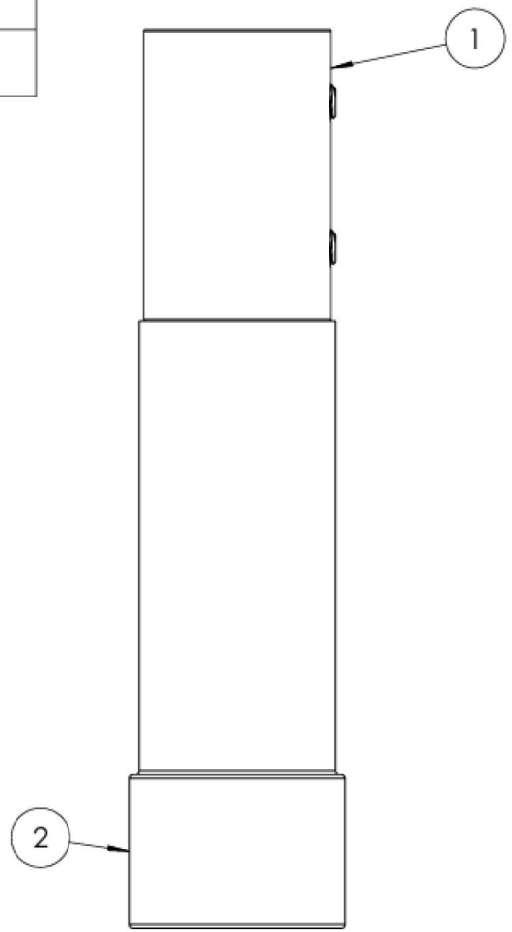

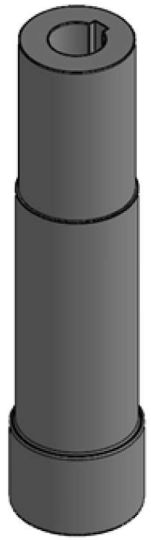

Team 6	NRC
Assembly	Title: Hex Shaft & Steel Collar
Capstone Project	

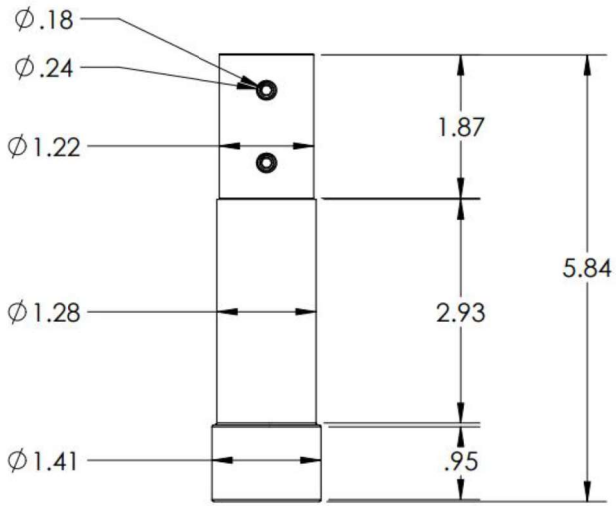

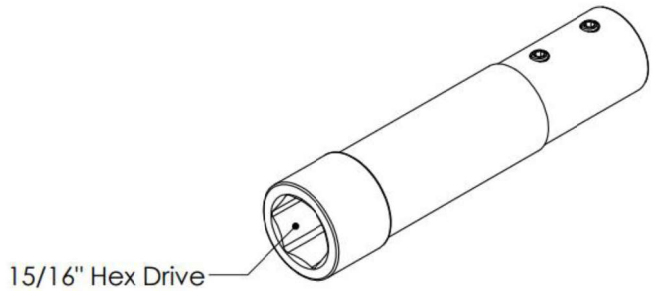

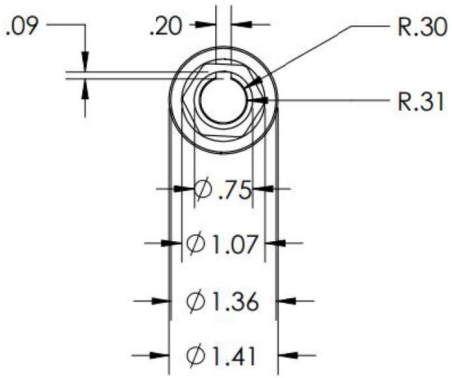

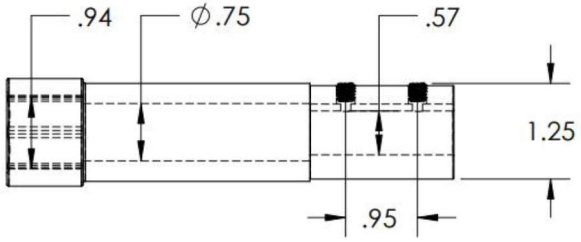

Team 6	NRC
Part	Title: Hex Attachment
Capstone Project	

ITEM NO.	PART NUMBER	QTY.
1	Mixer Base Plate	1
2	Vessel Base	1

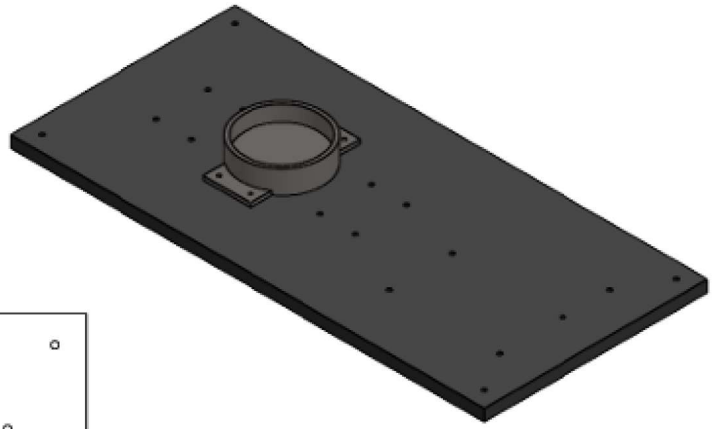

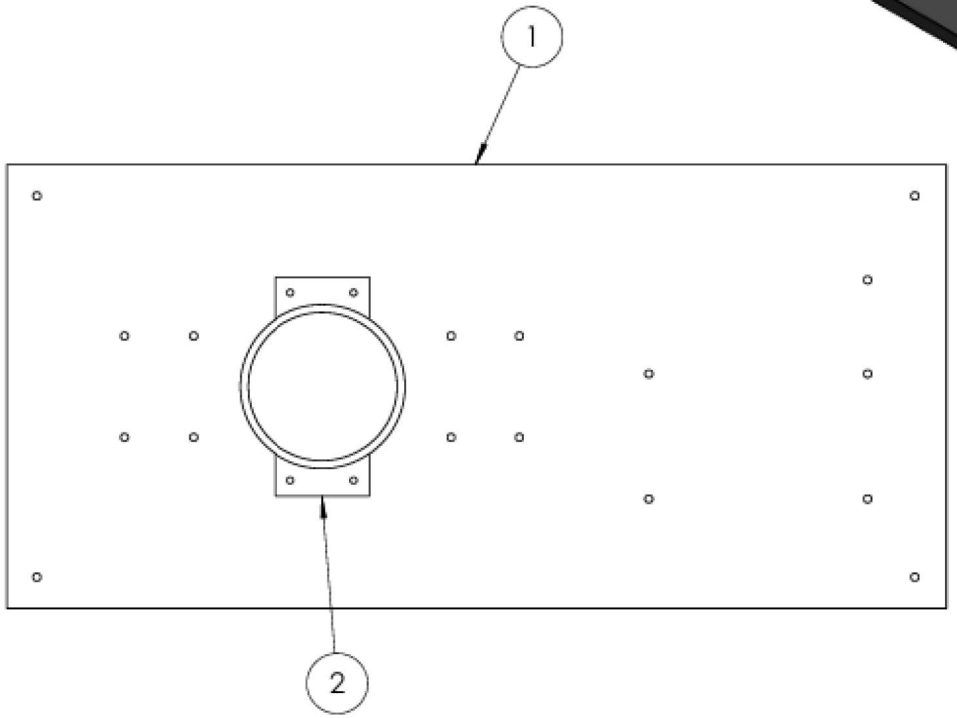

Team 6	NRC
Assembly	Title: Mixer Base Plate Assembly
Capstone Project	

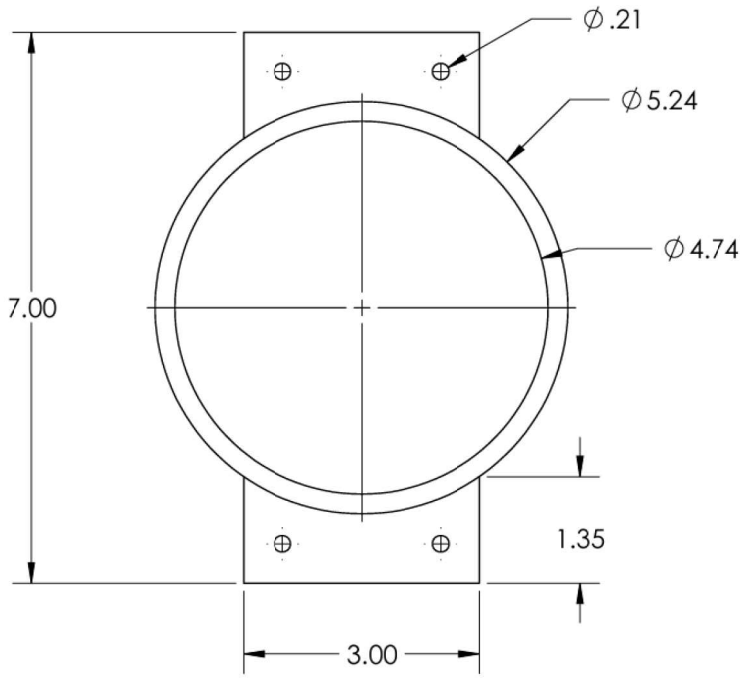

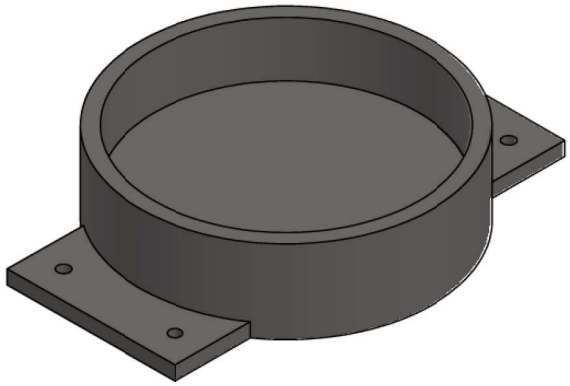

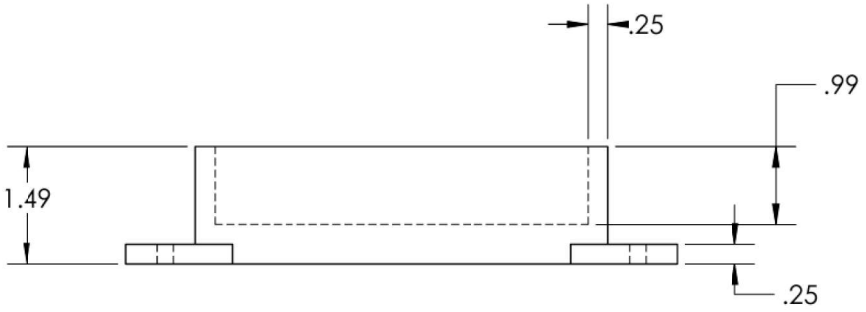

Team 6	NRC
Part	Title: Vessel Base
Capstone Project	

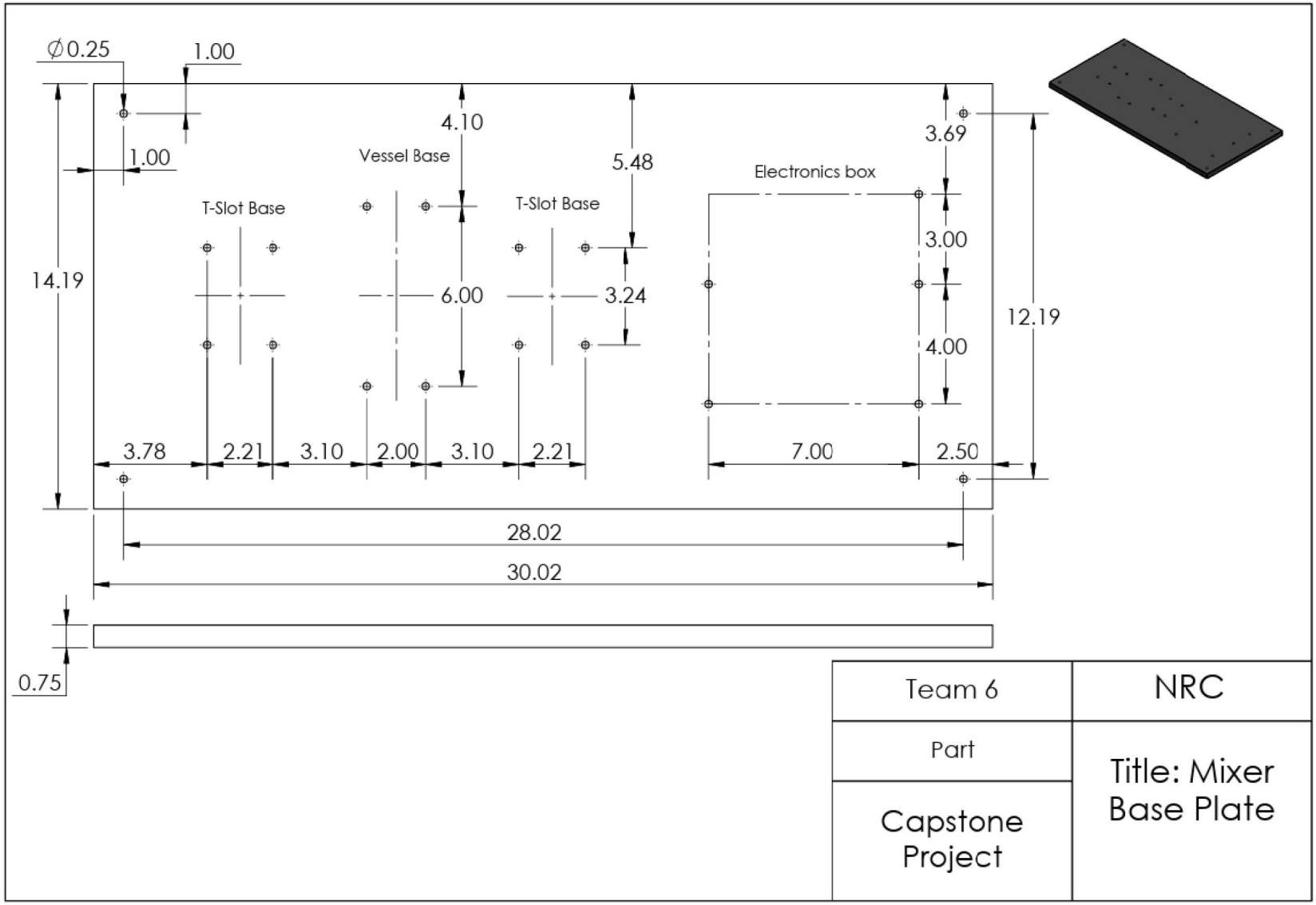
∅0.25
1.00
1.00
4.10
Vessel Base
5.48
T-Slot Base
T-Slot Base
Electronics box
3.69
3.00
4.00
14.19
6.00
3.24
12.19
3.78
2.21
3.10
2.00
3.10
2.21
7.00
2.50
28.02
30.02
0.75
Team 6
NRC
Part
Capstone Project
Title: Mixer Base Plate

ITEM NO.	DESCRIPTION	QTY.
1	T-Slotted Frame Base	1
2	T-Slotted Cap	1
3	T-Slotted Frame	1

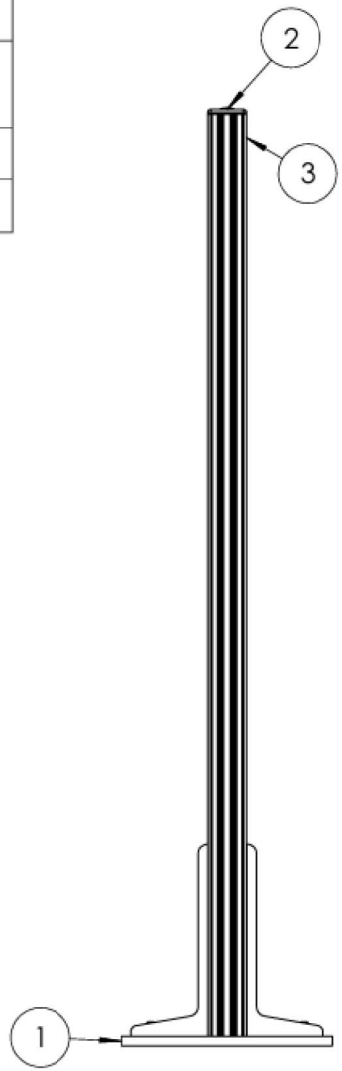

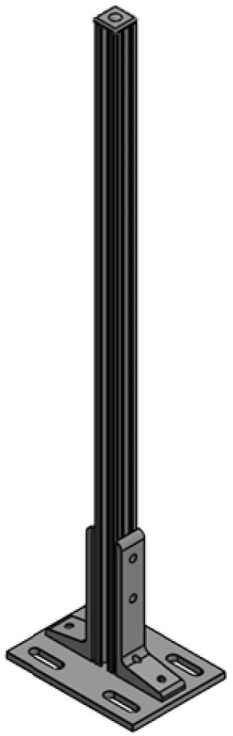

Team 6	NRC
Assembly	Title: T-Slot Rail
Capstone Project	

ITEM NO.	DESCRIPTION	QTY.
1	Limit Switch	1
2	Limit Switch Attachment	1

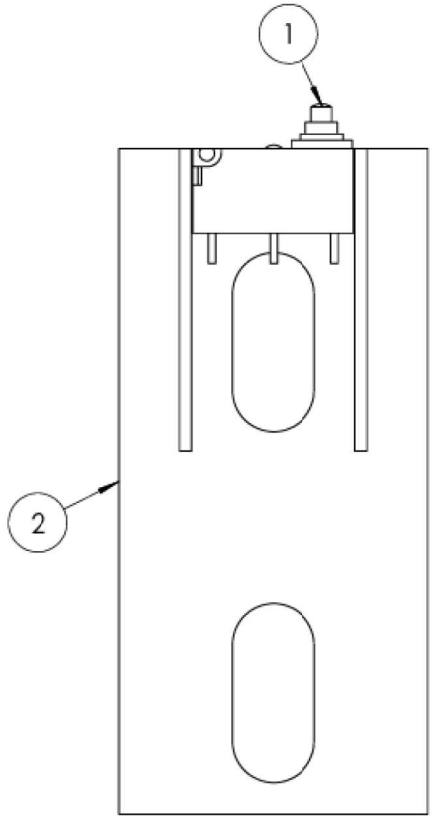

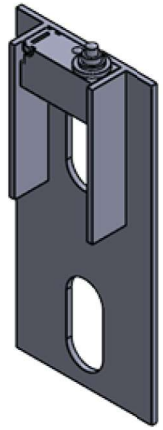

Team 6	NRC
Assembly	Title: Limit Switch & Attachment
Capstone Project	

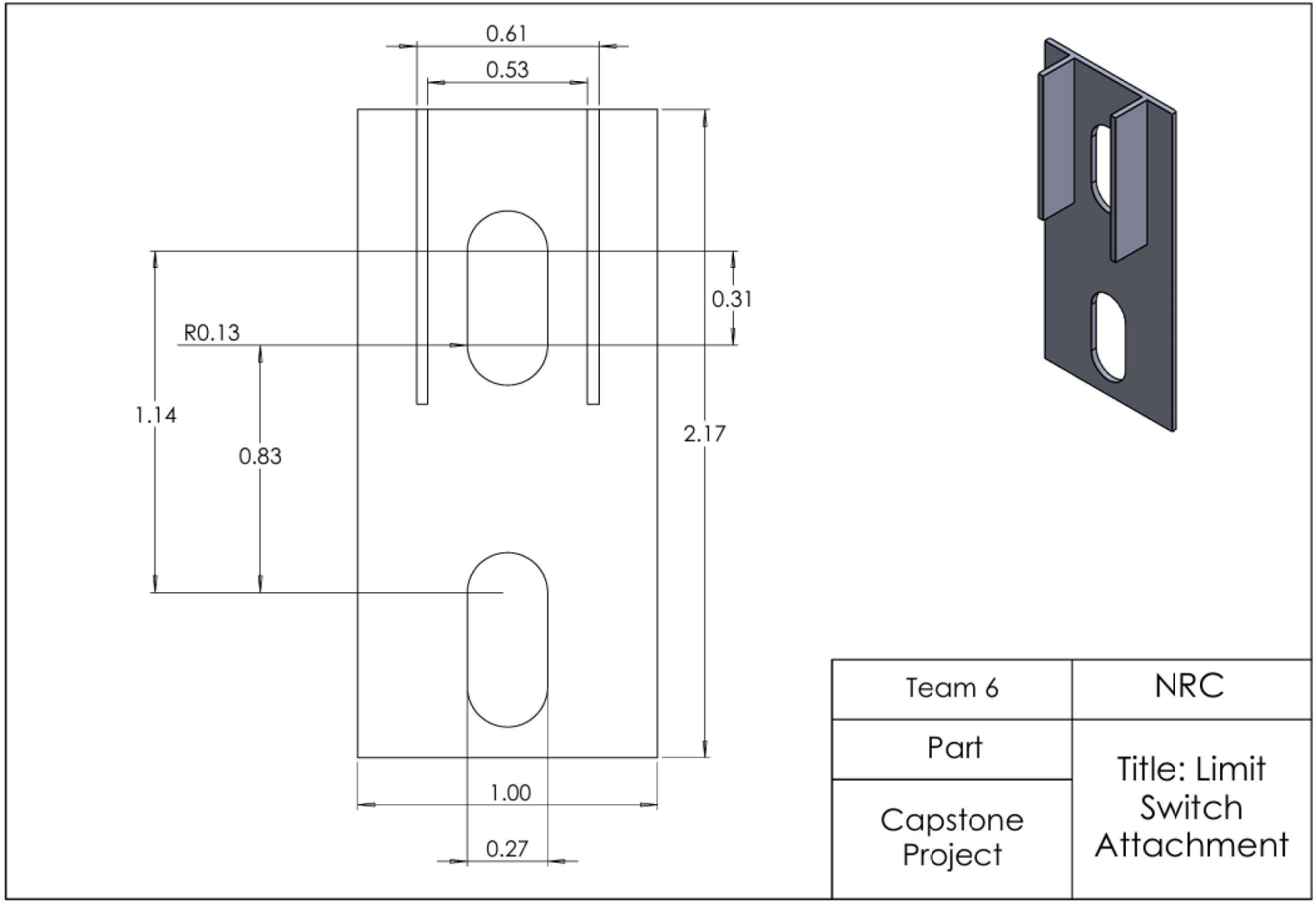
0.61
0.53
0.31
R0.13
1.14
0.83
2.17
1.00
0.27
Team 6
NRC
Part
Capstone Project
Title: Limit Switch Attachment

ITEM NO.	DESCRIPTION	QTY.
1	Box	1
2	Power Supply	1
3	Motor Driver	1
4	Emergency Step	1
5	Potentiometer	1
6	Run Switch	1
7	Power Switch	1
8	Female Socket Solder Cup	1
9	Male Connector	1

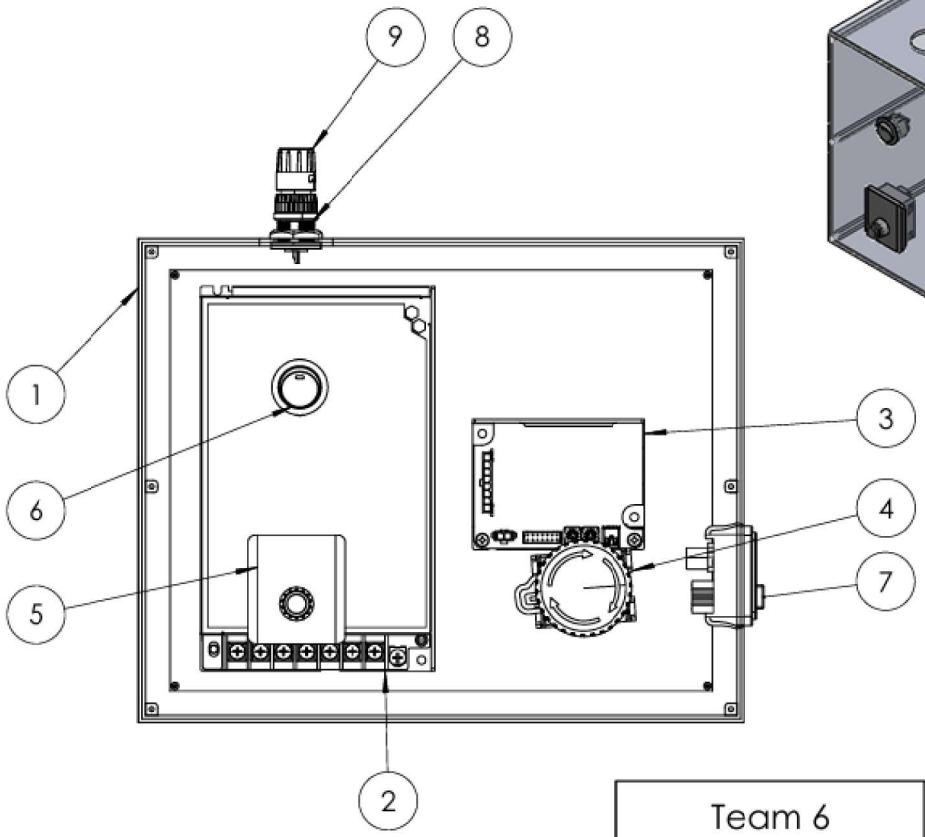

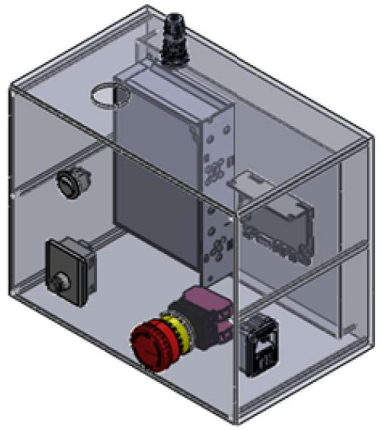

Team 6	NRC
Assembly	Title: Motor & Controls
Capstone Project	

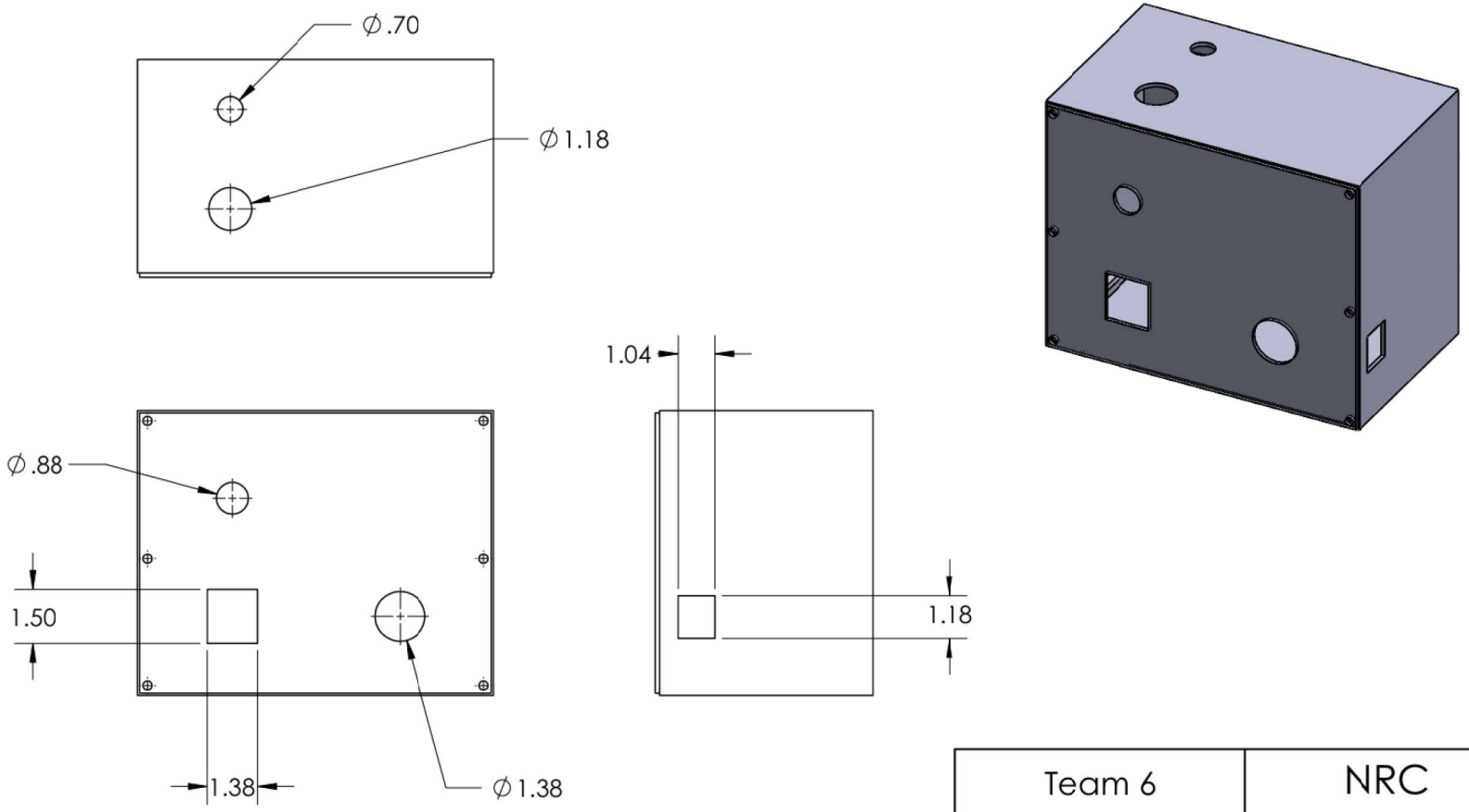

Team 6	NRC
Part	Title: Electrical Box
Capstone Project	

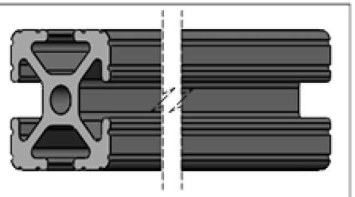

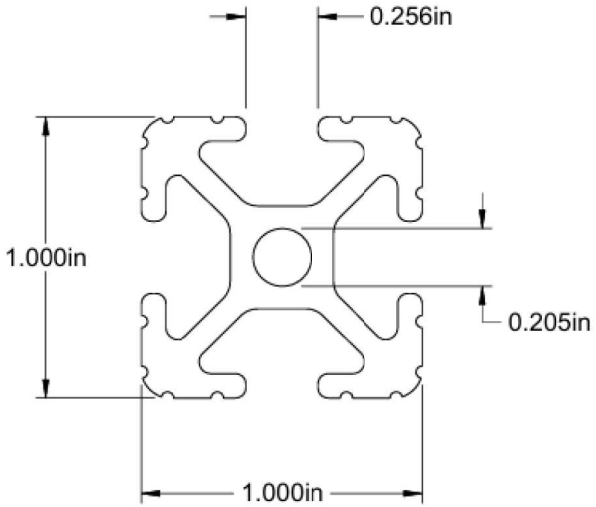

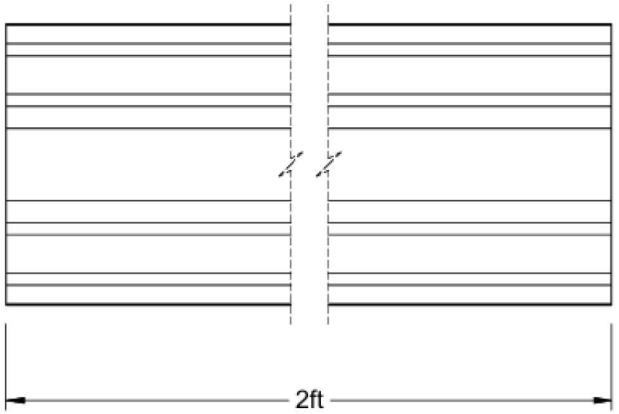

McMASTER-CARR® CAD

http://www.mcmaster.com

© 2023 McMaster-Carr Supply Company

Information in this drawing is provided for reference only.

PART NUMBER **47065T209**

T-Slotted Framing

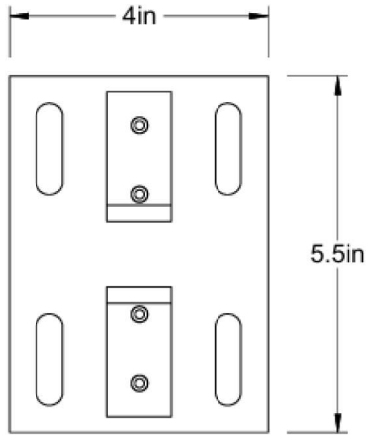

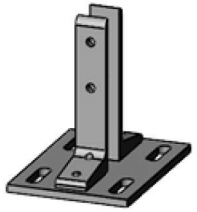

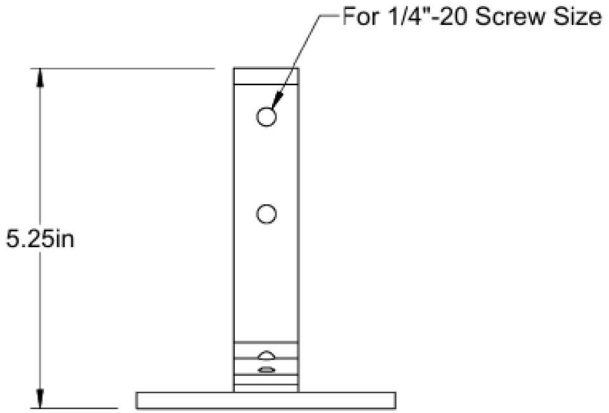

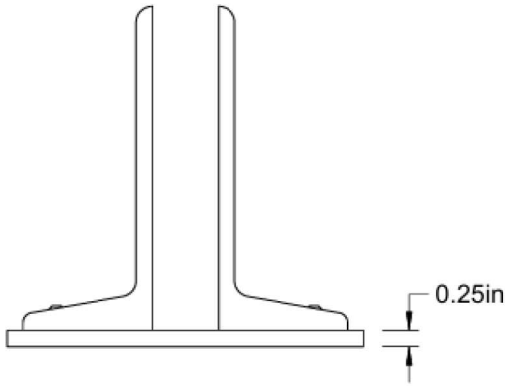

For Rail Height: 1in
Mounting Fastener Thread Length: 1/2in

McMASTER-CARR® CAD

http://www.mcmaster.com

© 2022 McMaster-Carr Supply Company

Information in this drawing is provided for reference only.

PART NUMBER **3136N138**

T-Slotted Framing

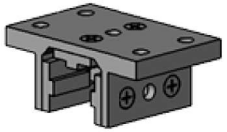

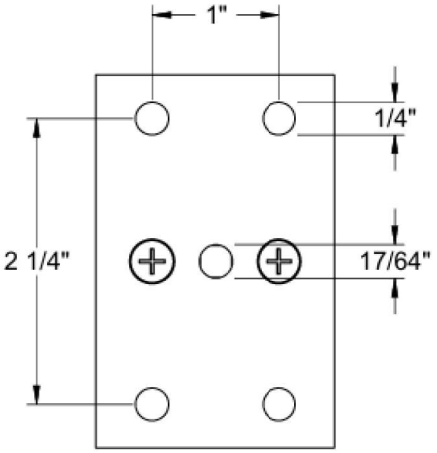

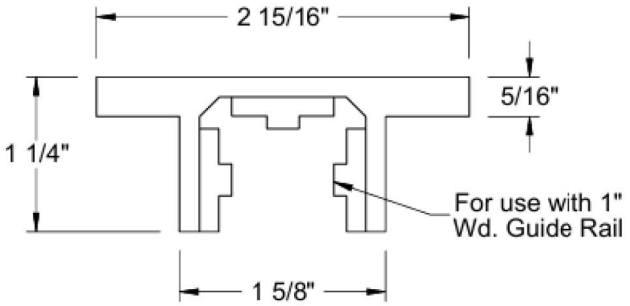

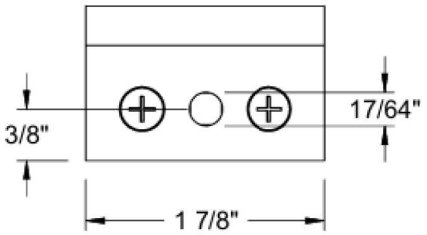

For use with 1" Wd. Guide Rail

McMASTER-CARR® CAD

PART NUMBER **60585K35**

http://www.mcmaster.com
© 2021 McMaster-Carr Supply Company
Information in this drawing is provided for reference only.

Sleeve Bearing Carriage
for T-Slotted Framing

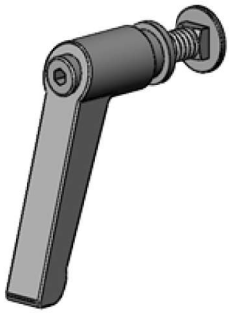

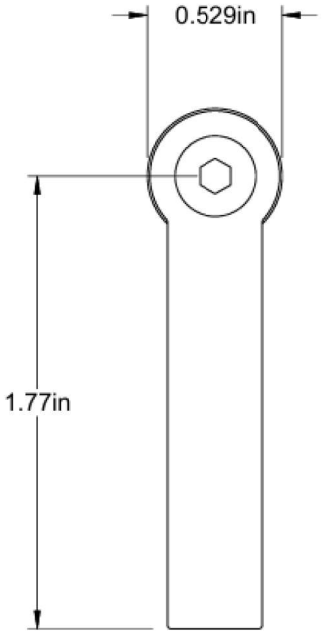

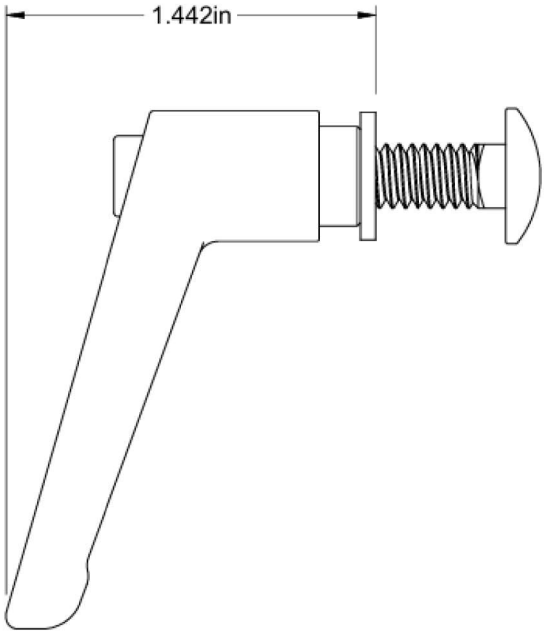

McMASTER-CARR® CAD

PART NUMBER 60585K31

http://www.mcmaster.com

© 2022 McMaster-Carr Supply Company

Hand Brake for 1-7/8" Long and 4" Long Sleeve Bearing Carriage for T-Slotted Framing

Information in this drawing is provided for reference only.

Appendix C: Bill of Materials

Table C1. Required electrical components for purchase (quantity = 1 for all)

Designator	Component	Cost per unit (CAD)	Source of materials
BLH Series Brushless DC Motor Speed Control System (details in Table C.2)	BLHM450KC-GFS	790.85	Orientalmotor
Power Supply Driver Cable (1 m)	LHS010CD	26.64	Orientalmotor
Extension Cable 1.5 m (4.92 ft.)	CC02BLH	92.19	Orientalmotor
External Speed Potentiometer	PAVR2-20K	58.89	Orientalmotor
AC/DC Enclosed Power Supply	LS100-24	49.82	TDK-LAMBDA supplied through Canada Newark
Emergency Stop Safety Switch	YW1B-V4E01R	45.87	APEM Inc. supplied through DigiKey
Contact Block Screw Terminal Safety Switch cartridge	28W5195	28.46	Newark
Run Power Switch with LED Light	CKN11820-ND	8.78	C&K supplied through DigiKey
ON/OFF Switch	CCM1915-ND	21.13	TE Connectivity Corcom Filters supplied through DigiKey
Female Sockets Solder Cup	SC1273-ND	8.41	Switchcraft / Conxall supplied through DigiKey
Male Pins Solder Cup	SC1262-ND	14.59	Switchcraft / Conxall supplied through DigiKey
Micro Limit Switch (10 pieces)	D2HW-A201D	28.64	Omron Electronics Inc-EMC Div supplied through DigiKey
BOX STEEL GRAY 10"L X 8"W X 6" H	CS1086-ND	31.39	Hammond Manufacturing supplied through DigiKey

Table C2. Components of the BLH Series Brushless DC Motor Speed Control System from Orientalmotor

Designator	Component
BLH Series Brushless DC Pinion Shaft Motor	BLHM450KC-GFS
Brushless DC Motor Digital Driver	BLH2D50-KD
GFS Gearhead Parallel Shaft (50:1)	GFS4G50

Table C3. Mechanical components from McMaster-Carr

Designator	Product #	Cost per unit (CAD)	Quantity	Total cost per quantity (CAD)
T-Slotted Framing Single Four Slot Rail, Silver, 1" High x 1" Wide, Solid x 2ft Long	47065T101	11.67	2	23.34
Sleeve Bearing Carriage for T-Slotted Framing for 1" Wide Single Rail, 1-7/8" Long	60585K35	68.82	2	137.64
1-Arm Brake for 1" High and 2" High Rail for Sleeve Bearing Carriage for T-Slotted Framing	60585K31	15.35	2	30.70
End Cap for 1" High Single Rail	3136N2	2.18	2	4.36
Base Plate Mounting Foot for 1" High Single Rail	3136N138	45.55	2	91.10
End-Feed Nut and Button Head, for 1" and 25 mm High Rail (4 pack)	47065T139	3.05	2	6.10
Extra-Deep 6-Point Socket 1/2" Square Drive, 15/16" Drive Size	55375A41	52.81	1	52.81
Set Screw Shaft Coupling 303 Stainless Steel, for 15 mm Diameter Keyed Shaft, 50 mm Overall Length	5395T514	62.27	1	62.27

Table C4. Additional Parts from Amazon

Designator	Product #	Cost per unit (CAD)	Quantity	Total cost per quantity (CAD)
Gorilla 100% Silicone Sealant Caulk	B077TFTBT7	12.99	1	12.99
Performix 11618 14.5 oz Plasti Dip	B01M67EHM1	34.99	1	34.99
BBDINO Silicone Mold Making Kit, Super Elastic Mold Making Silicone Rubber, Liquid Silicone for Mold Making, N.W. 21.2 oz, 1:1 by Volume, Ideal for Casting 3D Silicone Molds| Food Molds, Jade Green	B09BFGQ37Q	23.97	1	23.97
GIANTARM TPU 3D Printer Filament (2.2 lbs)	B09ZQSZWT7	34.99	1	34.99
Uxcell R188-2RS Deep Groove Ball Bearing, 5pcs 1/4" x 1/2" x 3/16" Chrome Steel Z2 Double Rubber Sealed Bearing	B0CLVDZD8Q	10.59	1	10.59
Tynulox 5/8" OD 304 Stainless Steel Tube (12 inch Length, Thickened Pipe Wall), 304 Stainless Steel Weldable Tubing Round Metal Pipe, Industrial Straight Tube, 2 Pcs	B0BGPLRGDQ	21.59	1	21.59
Cyleodo Garden Auger Spiral Drill Bits, 4X12" Post Hole Diggers Auger Drill Bit Drill Auger Attachment with Non-Slip 3/8" Hex Drive Drill	B08C24NYZF	17.99	1	17.99
Threaded inserts	B0CZPD55C1	18.98	1	18.98

Designator	Product #	Cost per unit (CAD)	Quantity	Total cost per quantity (CAD)
Heavy Duty Furniture Leveling Feet Adjustable Furniture Leg Levelers for Tables Chairs Cabinets Sofa Raiser, Support 1320LBs, T- Nut Kit 3/8"-16 Thread, Large Base,w/ 4 Felt Pads,12 Screws (4 Pack)	B08VRPCDNL	22.59	1	22.59

Table C5. Parts Purchased from Local Hardware Stores

Designator	Source	Product #	Cost per unit (CAD)	Quantity	Total cost per quantity (CAD)
Zinc hex bolt 1/4 x 1 1/2	Rona	63312	0.43	4	1.72
Zinc hex bolt 1/4 x 3/4	Rona	55817	0.29	8	2.32
Zinc hex nut 1/4 - 20	Rona	63301	0.25	12	3.00
Zinc flat washer 1/4	Rona	63306	0.25	12	3.00
Grade 5 UNC Plated hex bolts 3/8 x 1 1/2	Home Depot	2733	1.14	8	9.12
Grade 5 UNC Plated hex nuts 3/8	Home Depot	2603	0.40	8	3.20
Grade 5 UNC Plated washers 3/8	Home Depot	3257	0.22	8	1.67
#10-24 Hex Machine Screw Nut - Zinc Plated (14 pack)	Home Depot	1000146170	3.97	1	3.97
#10 SAE Flat Washers, Zinc Plated (16 pack)	Home Depot	1001588233	3.97	1	3.97
#10-24 x 1-1/4-inch Round Head Square Drive Machine Screw - Zinc Plated (16 pack)	Home Depot	1000121191	3.97	1	3.97

Designator	Source	Product #	Cost per unit (CAD)	Quantity	Total cost per quantity (CAD)
1/4-20 x 36-inch Stainless Steel Threaded Rod - UNC	Home Depot	1000126799	11.68	1	11.68
Grade 5 UNC Plated hex nuts 1/4	Home Depot	2601	0.21	8	1.68
Grade 5 UNC Plated washers 1/4	Home Depot	3255	0.16	8	1.28

Table C6. Parts Recycled from Spare/Scrap Material

Designator	Quantity
16 Gauge wire	-
20 Gauge wire	-
Machine screws (1/8x1/4 inches)	4
Nuts (1/8 inches)	4
Washers (1/4 inches)	15
Insulated quick connect terminal wire connection	3
Insulated ring terminal wire connection	2
Insulated fork terminal wire connection	11
8-terminal screwed wire connector	1
Painted wood base plate (31x10x0.75 inches)	1
12-gauge aluminum base plate (8x7 inches)	1
11-gauge steel plate (12x4 inches)	1
Welding material	-
Soldering material	-
Stainless steel wiper blade (7x0.5x0.125 inches)	1
Hex nut mixing blade attachment (7/8 inches)	1
Hot glue	-
Aluminum foil for silicone molding (12x4 inches)	1
Plastic bushing (1/2x1/8 inches)	1

The parts listed in Table C6 were salvaged from non-working devices and scrap material, contributing to the project's sustainability.

The total cost for all components purchased for the construction of the prototype mixer was **$1863.24**

Appendix D: Technical Datasheets for Internal Components

Performix

PLASTI DIP®

MULTI-PURPOSE RUBBER COATING

DESCRIPTION:
PLASTI DIP® is an air dry, synthetic rubber coating that can be easily applied by spraying, brushing or dipping. PLASTI DIP® resists moisture, acids, abrasion, weathering, electrical shock, skidding/slipping, corrosion; coats and gives a comfortable, controlled, color coded grip to all types of tools; lawn and garden, mechanical, electrical, woodworking and masonry. PLASTI DIP ® can also be applied to:

- Wood: seals and protects from weathering and prevents splinters.
- Metal: reduces vibration, deadens sound, prevents corrosion, insulates electrically and from extreme temperatures.
- Glass: shatterproofs glass objects (available in clear).
- Rope/Fabrics: weatherproofs, prevents rotting and fraying.
- Plastics: protects delicate surfac es from scratches.
- Rubber: weatherproofs, wear resistant.
- Maps: weatherproofs, tear resistant (available in clear).

SPECIFICATIONS:

Solids: (wt.) 24%
Tensile: (ASTM D -638) 3,740psi
Elongation: (ASTM D -638) 430%
Cut resistance: (ASTM D -1044) very good
Stone abrasion: (ASTM D -3170) excellent
Shelf life: 1 year at 77°F
Chemical resistance:
acids, alkalines, pollutants: excellent
petroleums: limited

Durometer: shore A (ASTM D -2240) 70
Salt spray: (ASTM B -117) passed 1,000 hours
Weatherability: (ASTM G -53) 3-5 years: PLASTI DIP
7 -10 years: PLASTI DIP U.V. Stable
Temperature use range: -30°F to 200°F.
Viscosity range: 80 – 100 K.U. @ 77 °F (+/- 2°F)
Permeability: (ASTM E -96) .03 grains/sq. ft./hr.
Coverage: 30 sq.ft. per gallon at 15 mils
Dielectric: (ASTM D -149) 1,400 v/mil

ALTERNATIVE PRODUCTS:
For a water base alternative see HCFeccs® technical data sheet

SURFACE PREPARATION:
MIX WELL BEFORE USE.
All surfaces to be coated must be free of all oils, grease, dirt, wax and loose rust. A sandblasted or rough surface improves adhesion. Use PLASTI DIP ® PRIMER on all metals for best results.

USE ADEQUATE VENTILATION.



Unit 1 Harvesting Lane
East Meon
Petersfield
Hampshire
GU32 1QR

SPRAYING: Pressure pot may be used (siphon cup not recommended). Dilute with recommended thinners up to 50% as needed. Gently mix before spraying. Apply wet overlapping coats, holding gun 6" -12" from surface, using a 4"-6" pattern. Allow 10 -20 minutes dry time before applying additional coats to desired thickness.

RECOMMENDED EQUIPMENT AND SETTINGS:
Gun: Binks® model 95
Nozzle: 63B
Needle: 663A
Material: 20-25psi
Atomization: 15-25psi
Dilution: as needed
Cap: 63PB (up to 50% dilution) or 66S D (up to 50% dilution) for heavier build up.
Clean up: see recommended thinners.

SPRAYING: Airless equipment may be used. Use as described above.
Tip size: .011 - .019
Pressure: as needed
Dilution: up to 50%

DIPPING: Dilute with recommended thinne rs up to 25% as needed. Gently mix before each use. Do not introduce air bubbles. Insert item 1" every 5 seconds. Remove at same rate. Allow 30 -40 minutes (dry to the touch) dry time before applying additional coats to desired thickness.

BRUSHING: Dilute with recommended thinners up to 25% as needed. Gently mix before each use. Apply wet overlapping coats using a soft natural bristle brush. Allow 10 -20 minutes (dry to the touch) dry time before applying additional coats to desired thickness.

HINTS:
Recommended thinners: PLASTI DIP ® THINNER, Toluene or VM&P Naphtha. A dry film thickness of 12 -15 mils is recommended for best results. Approximate dry mil thickness per coat, dipping 6 -8 mils; brushing 4 -5 mils; spraying 2-5 mils. **Allow 4 hours dry time per coat before use.** Allow overnight drying whenever possible. When using a dip tank, allow 6" minimum from fluid surface to tank top to avoid "skinning over". Avoid excessive air movement, heat or humidity. Always use proper ventilation and prote ction.

ADDITIONAL APPLICATION IDEAS

Tranformers	Cables / Straps
Rope	Wood
Joy Sticks	Circuit Boards
Electrical Boxes placed on the ground	Magnets
Stove/Oven handles	Fabric
LaCrosse Sticks/Nets	Astro Turf
Food Grade B arrels	Crutch Handles
Control Boxes	Relay Electric Wench
Metal Grates	Sharp edges
Pumps	Hand Tools
Valves / Actuators	Curtains
Pulleys & Rings	Clips
Poles	Glass
Underground tanks	Pipes

Hardware & Metal surfaces to prevent electrical discharge & sparks

We cannot anticipate all conditions under which this information and our products, or the products of other manufacturers in combination with our products, may be used. We accept no responsibility for results obtained by the applications of this informati on or the safety and suitability of our products, either alone or in combination with other product combination for their own purposes. Unless otherwise agreed in writing, we sell the products without warranty, and buyers and users assume all responsibil ty and liability for loss or damage arising from the handling and use of our products whether used alone or in combination with other products. Ever changing V.O.C. regulations in your area may require you to contact local authorities for proper use and/or disposal of this product. Should you need further assistance, please contact PLAST DIP INTERNATIONAL technical service.

PLASTI DIP, HCF, Performix and logo are registered trademarks of PLASTI DIP INTERNATIONAL.
BINKS is a registered trademark of BINKS M FG. CO., Franklin Park, IL

TECHNICAL DATA SHEET #5
REVISED 1/22/02DR
PD

Advanced Silicone 2 Kitchen & Bath Sealant

DESCRIPTION

GE branded Advanced Silicone 2 Kitchen & Bath Sealant is 100% waterproof with 10-year mold-free product protection. Ready for water exposure in as little as 30 minutes, this sealant is ideal for kitchen and bath sealing projects where moisture and humidity may be present. This high-performance, durable sealant is permanently flexible with excellent adhesion. Advanced Silicone 2 Kitchen & Bath Sealant is neutral curing, which means it is low in odor and will not blemish most metal finishes. Backed by a lifetime guarantee.

Available as:

Item #	Country	Package	Size	Color
2812565	USA	Plastic cartridge	10.1 fl. oz. (299 ml)	White
2812562	USA	Plastic cartridge	10.1 fl. oz. (299 ml)	Clear
2816707	USA	Plastic cartridge	10.1 fl. oz. (299 ml)	Almond
2812566	USA	Plastic squeeze tube	2.8 fl. oz. (83 ml)	White
2812563	USA	Plastic squeeze tube	2.8 fl. oz. (83 ml)	Clear
2816708	USA	Plastic squeeze tube	2.8 fl. oz. (83 ml)	Almond
2812608	Canada	Plastic cartridge	10.1 fl. oz. (299 ml)	White
2812607	Canada	Plastic cartridge	10.1 fl. oz. (299 ml)	Clear
2816993	Canada	Plastic cartridge	10.1 fl. oz. (299 ml)	Almond
2816994	Canada	Plastic cartridge	10.1 fl. oz. (299 ml)	Grey
2812606	Canada	Plastic squeeze tube	2.8 fl. oz. (83 ml)	White
2812603	Canada	Plastic squeeze tube	2.8 fl. oz. (83 ml)	Clear

FEATURES & BENEFITS

- 100% Silicone
- 100% Waterproof
- Resist mold with 10-year mold-free product protection [2]
- Meets ASTM C-920, Class 35 specifications
- 30-minute water-ready [1]
- Shrink & crack-proof
- Neutral curing with low odor
- Won't blemish most high-end metal finishes like chrome, bronze & nickel
- 40% more flexibility than Class 25 sealants [3]
- Permanently flexible
- Freeze/thaw stability
- Non-paintable

RECOMMENDED FOR

Advanced Silicone 2 Kitchen & Bath Sealant is used in a wide variety of applications including, but not limited to showers, tubs, sinks, tile, countertops and fixtures, as well as other kitchen and bath applications. It may be used on common kitchen and bath materials including most metals, plastics and wood, glass, drywall, plaster, granite, cultured marble, ceramic and porcelain tile, natural stone, cement board, composites, Formica, fiberglass, aluminum, and painted surfaces, as well as most metal finishes such as chrome, bronze & nickel.

Technical Data Sheet

Revision: May 1, 2024
Supersedes: April 15, 2023
Ref. #: 703669, 703670, 703671
703672, 703673, 703674, 703675

LIMITATIONS

Should not be considered:

- Where painting of sealant is needed
- For use underwater or in other applications where the product will be in continuous contact with water
- For use in food contact applications (direct or indirect)
- For use in aquariums
- For use under shower door tracks, or as a spackling compound
- On frozen or contaminated surfaces
- Under exceedingly hot or cold conditions
- For structural repairs
- On excessively basic or acidic substrates
- For use on galvanized surfaces, or special coatings, such as mirrors, without approval of the article's manufacturer

COVERAGE

For a 10.1 fl. oz. (299 ml) cartridge:

- A 3/16" (5 mm) bead extrudes approx. 51 ft. (15.5 m)
- A 3/8" (9.5 mm) bead extrudes approx. 13.7 ft. (4.2 m)

For a 2.7 fl. oz. (83 ml) squeeze tube:

- A 3/16" (5 mm) bead extrudes approx. 13 ft. (4 m)
- A 3/8" (9.5 mm) bead extrudes approx. 3.7 ft. (1.1 m)

TECHNICAL DATA

Typical Uncured Physical Properties

Colors:	White, Almond, Clear/colorless**, and Grey (CA only)	
Appearance:	Non-slumping paste	
Base:	Neutral cure Silicone	
VOC Content:	3% by weight	CARB
	31 g/l	SCAQMD rule 1168
Shelf Life:	18 months from date of manufacture (unopened) **Use by date** is printed on cartridge or on crimping of squeeze tube	

Typical Application Properties

Application Temperature:	Surface and ambient temperatures must be above 32°F (0°C) and below 120°F (49°C)
Odor:	Light Alcohol
Tooling / Open Time:	5-10 minutes*
Skin Time / Tack Free:	30 minutes*
Cure Time:	24 hours*
Clean Up:	Clean uncured sealant residue immediately using mineral spirits. Cut or scrape away cured sealant using a sharp-edged tool.

**At 73°F (23°C) and 50% relative humidity. Time is dependent on temperature, humidity, porosity of substrates and depth of sealant applied. Cure time is significantly increased in cold temperatures and/or low humidity conditions.*

***Clear/colorless is not descriptive of sealant transparency. Thickness of applied bead will impact clarity of the cured product.*

Typical Cured Performance Properties

Colors:	White, Almond, Clear/Colorless**, and Grey (CA only)		Service Temperature:	-60°F to 400°F (-51°C to 204°C)	
Cured form:	Non-flammable, rubbery solid		Shore A Hardness:	15	ASTM D2240
Water Resistant:	Yes, 30-minute water ready [1]		Elongation at Break:	347%	ASTM D412
Paintable:	No		Tensile Strength at Break:	145 psi	ASTM D412
Movement Capability:	± 35%	ASTM C719			
Specifications:	Meets the performance requirements of: ASTM C-920, Type-S, Grade NS, Class 35, Use G test requirements				

[1] Exposure to water possible in 30 minutes with bead size max 3/16" (4.8 mm), temperature min 65°F (18.3°C) and humidity min 50%. Otherwise, sealant should not be exposed to water for 8 hours. Do not touch or clean sealant for 24 hours, or until fully cured.

[2] Fully cured sealant is resistant to stain-causing mold & mildew. Regular cleaning of sealant is required however, as soap and other residue can cause secondary mold and mildew growth on surfaces.

[3] Based on ASTM C-920, TYPE-S, NS, CLASS 35 analysis, product can span gaps of up to 5/8" x 5/8" with over 347% elongation and 35% joint movement.

DIRECTIONS

Tools Typically Required:
Utility knife, caulking gun, and tool to puncture cartridge seal.

Safety Precautions:
Wear gloves and wash hands after use.

Surface Preparation:

- The temperature of the product, any surfaces, and the working area must be above 32°F (0°C). For best performance, apply sealant at 70°F (21°C). It is recommended to store product at room temperature at least 24 hours before use during extreme cold weather conditions.
- Check "Use By" date on product container. If expired product is applied, the sealant may have difficulty curing, or may not cure at all, and may need to be removed. See instructions on sealant removal.
- All surfaces, including new construction, must be clean, dry, and sound prior to application of the sealant. All contaminants, impurities, or other adhesion inhibitors (such as old sealants, dirt, oils, soap residue, and other surface treatments, etc.) must be removed from surfaces to which the sealant is intended to adhere to. Surface preparation should be completed on the same day product is being applied, preferably within 1 – 2 hours before sealant is to be applied, to allow surfaces to dry.

  If existing UNCURED sealant needs to be removed:
  Remove (scrape, wipe, dig out, etc.) uncured sealant and then scrub the area with isopropyl alcohol (IPA)† to remove any remaining oily residue.

  If existing CURED / OLD sealant needs to be removed:
  Remove as much as possible by cutting/peeling/scraping excess caulk from the surface.
  For ceramic tile, marble, Formica®, fiberglass, etc.: use 100 percent mineral spirits (turpentine)† and a non-abrasive scouring pad. Test mineral spirits† on a hidden area of the surface to ensure discoloration will not occur. If discoloration does occur, contact the manufacturer of the surface for further assistance.
  For glass surfaces: carefully use a razor blade within a holder to remove as much as possible, then apply mineral spirits†. Remove excess with a towel or other suitable cleaning utensil that will not mark the surface (such as a nonabrasive pad).
  For hard plastics or painted surfaces: use rubbing alcohol† and a soft cloth. Do not use mineral spirits†.
  For porous/rough surfaces (concrete, brick, wood, wallpaper): remove as much of the sealant as possible (same as smooth surface). If necessary, use a wire brush in conjunction with mineral spirits†. We do not recommend use of a wire brush to remove sealant from wood surfaces, as doing so could damage the wood. Also, mineral spirits† should not be used if wood has any type of finish on it. Test solvent on a hidden area before applying.
  Special notes about silicone sealant: There is no substance that will dissolve silicone. If you are reapplying silicone to the area, remove the old sealant, and then clean the area as detailed below. If mold or mildew is present, apply rubbing alcohol†. Let the area dry before reapplying silicone.
- Surfaces which sealant are to be applied on need to be prepared properly. The following are guidelines for preparing a variety of surfaces:

  Concrete, masonry, and stone: use a wire brush to remove old caulk/sealant, dirt, dust, and loose particles. All contaminants and impurities must be cleaned off, such as concrete form release agents, water repellents, and other surface treatments and protective coatings.
  Porous surfaces: use sandpaper or a wire brush where necessary to provide a sound, clean surface. Since porous materials can absorb and retain moisture, it is important to confirm that substrates are dry prior to application of sealant.
  Metal, glass, and plastic: clean surface with a solvent such as mineral spirits† or a lacquer thinner†. When using solvents, always wipe the surface dry with a clean cloth or lintless paper towels. Never allow a solvent to air dry or evaporate without wiping. Isopropyl alcohol (IPA)† is a commonly used solvent that has shown to be effective with most non-porous substrates.
  Architectural coatings, paints, and plastics: Clean with a solvent† approved by the manufacturer of the product, or which does not harm or alter the finish.
  Note: cleaning surfaces with detergent or soap and water is not recommended as silicone will not adhere to surfaces with any soap scum/residue present.
- Some materials, such as concrete, soft woods, stone, specially treated metals, plastics, or other man-made materials, might have unpredictable surface characteristics. Therefore, we recommend testing for adhesion by applying the caulk/sealant to a small area before proceeding with an entire job.
- Some materials may cause discoloration on the surface of sealant/substrate. Compatibility testing prior to use is recommended.
- Use backer rod for gaps larger than 3/8" D x 3/8" W (9.5mm x 9.5mm). Sealant beads should not be thicker than ½" (12.7mm) or thinner than 1/8" (3.2 mm), using a width-to-depth ratio of 2:1.

Masking: The use of masking tape is recommended, where appropriate, to ensure a neat job and to protect adjoining surfaces from over-application of sealant. Masking tape should be removed immediately after tooling the sealant and before the sealant begins to skin over (see Tooling / Open time).

DIRECTIONS

Application:

- Cut nozzle to obtain desired bead size and pierce inner foil seal. For squeeze tube, remove cap and cut nozzle.
- Using a caulking gun (for cartridge use), apply sealant in a continuous operation applying a positive pressure adequate to properly fill and seal the seam, cavity, or joint.
- Smooth or tool the sealant into gap within 5–10 minutes of application. Smooth or tool the sealant into gap within 5–10 minutes of application. Tool or strike the sealant with a clean and dry gloved finger or caulk finishing tool, applying light pressure to spread the material against the joint surfaces to ensure a void-free application. Do not over tool or tool too thin. Doing so will have a negative impact on sealant integrity and performance. Sealant skins over in approximately 30 minutes, depending on humidity and temperature.
- When tooling, use care not to spread the sealant over the face of the substrates adjacent to the joint or masking as Advanced Silicone 2 Kitchen & Bath Sealant can be extremely difficult to remove from rough or porous substrates. Excess sealant should be cleaned from glass, metal, and plastic surfaces while still uncured. On porous surfaces, excess sealant should be allowed to progress through the initial cure or set-up. It should then be removed by abrasion or other mechanical means.
- In near-confined spaces, which limit overall access to the atmosphere, sealant will cure only from that surface which has access to the atmosphere. Do not encapsulate sealant between two non-porous substrates.

NOTE:

- Some materials that bleed plasticizers or oils can cause a discoloration on the surface of sealants. When sealing to or over items such as rubberized gaskets, bituminous based materials, butyl or oil-based products, oily woods, tapes, etc., compatibility testing prior to use is recommended.
- If Advanced Silicone 2 Kitchen & Bath Sealant is applied when the temperature is below 32°F (0°C) or if frost or moisture is present on the surfaces to be sealed, the rate of cure will slow. For standard cure speed, apply in temperatures above 40°F (4°C).
- The cure rate of this product is primarily dependent upon temperature and the availability of atmospheric moisture. Under average conditions (relative humidity of 50% at an air temperature of 73°F (23°C)) this material can attain a cured thickness of 2-3 mm per 24 hours (assuming ample access to atmospheric moisture). As temperature decreases, the cure rate slows down (and vice versa). Low moisture environments will also reduce the cure rate.
- Users must evaluate GE branded products and make their own determination as to fitness of use in their specific application. It is the user's responsibility to test substrate compatibility, and adhesion of the cured sealant on a test joint before applying to the entire project.
- In addition to the guidelines provided in this datasheet, Henkel Corporation recommends designers and users of Advanced Silicone 2 Sealant familiarize themselves with the latest editions of the following industry guidelines and best practices:
  - ASTM C1193 Standard Guide for Use of Joint Sealants.

Clean up:

Clean uncured sealant residue immediately using mineral spirits† or paint thinner†. Cut or scrape away cured sealant using a sharp-edged tool. For removal from specific surfaces, refer to section on "Surface Preparation" for additional information.

†Mineral spirits and alcohols are flammable and should be used away from sparks, flames, and other ignition sources. Only use solvents in a well-ventilated area and follow all safety precautions and instructions listed on the product label or as otherwise provided by the manufacturer.

STORAGE & DISPOSAL

NOT DAMAGED BY FREEZING. Store unopened containers in a cool, dry, well-ventilated area away from heat, sparks, and direct sunshine under standard conditions. Standard storage conditions are defined as 72 ± 4°F (22 ± 2°C) and < 50% relative humidity. Elevated temperatures or extreme cold temperatures will reduce shelf life. In cool or cold weather, store container at room temperature for at least 24 hours before using. Keep container tightly closed until ready for use. Use an approved hazardous waste facility for disposal. Hardened material may be disposed of in the trash.

Technical Data Sheet

Revision: May 1, 2024
Supersedes: April 15, 2023
Ref. #: 703669, 703670, 703671
703672, 703673, 703674, 703675

LABEL PRECAUTIONS

WARNING! UNCURED SEALANT MAY IRRITATE EYES, SKIN, AND RESPIRATORY TRACT.

CAUTION! Contains hexamethyldisilazane, methyltrimethoxysilane, and petroleum distillates. Methanol and ammonia are released during application and cure, which may affect the nervous system causing dizziness, headache, or nausea. Prolonged or repeated skin contact with uncured product may cause irritation. Do not get in eyes on skin or clothing. Gloves are recommended to prevent skin contact. Remove contact lenses before using. Wear safety glasses. Use with adequate ventilation. Do not swallow.

FIRST AID: For eye contact flush immediately with water for 15 minutes. Call a physician if irritation develops and persists. For skin contact, wipe off with paper towel or cloth. Wash with water and soap immediately. If affected by inhalation, move to fresh air and get medical attention if symptoms develop or persist. If ingested, DO NOT induce vomiting; call a physician or Poison Control Center immediately. **DO NOT TAKE INTERNALLY.**
KEEP OUT OF THE REACH OF CHILDREN.

⚠ **WARNING: Reproductive Harm – www.P65Warnings.ca.gov**

Refer to the Safety Data Sheet (SDS) for further information

DISCLAIMER

The information and recommendations contained herein are based on our research and are believed to be accurate, but no warranty, express or implied, is made or should be inferred. Henkel recommends purchasers/users should test the products to determine acceptable quality and suitability for the intended use. All adhesive/sealant applications should be tested under simulated or actual end use conditions to ensure the adhesive/sealant meets or exceeds all required project specifications. Since assembly conditions may be critical to adhesive/sealant performance, it is also recommended that testing be performed on specimens assembled under simulated or actual production conditions. Nothing contained herein shall be construed to imply the nonexistence of any relevant patents or to constitute a permission, inducement, or recommendation to practice any invention covered by any patent, without authority from the owner of the patent.

LIMITED WARRANTY

LIMITED LIFETIME GUARANTEE: Manufacturer warrants that this product, when used as directed, will meet the above specifications for as long as you own your home. If not satisfied, return with proof of purchase for refund. This is the sole and exclusive remedy and Manufacturer shall not be liable for any damages in excess of the purchase price. THIS WARRANTY IS IN LIEU OF ALL OTHER WARRANTIES, EXPRESS OR IMPLIED, INCLUDING ANY WARRANTY OF MERCHANTABILITY OR FITNESS. For warranty assistance, contact Henkel at 1.877.607.7407 M-F 9:00 am to 4:00 pm ET.

GE is a registered trademark of General Electric Company and is used under trademark license by Henkel.

For Technical Assistance call : 1-877-607-7407 – Mon - Fri 9:00a – 4:00p ET
www.gesealants.com

Founded in 1876, Henkel is a global leader in the consumer and industrial businesses. Henkel operates worldwide with leading brands and technologies in three business areas: Laundry & Home Care, Beauty Care (Consumer Brands) and Adhesive Technologies.

Henkel Corporation - Professional & Consumer Adhesives Headquarters - Rocky Hill, CT 06067
www.henkelna.com

Heavy Duty Furniture Leveling Feet Adjustable Furniture Leg Levelers for Tables Chairs Cabinets Sofa Raiser, Support 1320LBs, T- Nut Kit 3/8"-16 Thread, Large Base w/ 4 Felt Pads 12 Screws (4 Pack)



Brand	Anwenk
Colour	White 4p
Material	Metal
Size	Small
Style	Modern
Item weight	0.26 Kilograms
Shape	Round
Product care instructions	Wipe with Damp Cloth

Best Sellers Rank	#35,052 in Tools & Home Improvement (See Top 100 in Tools & Home Improvement) #155 in Furniture Legs
ASIN	B08VRPCDNL
• **Measurements**	
Size	Small
Item Weight	0.26 Kilograms
• **Additional details**	
Weight Capacity Maximum	330 Pounds
• **Style**	
Colour	White 4p
Style	Modern
Shape	Round
Leg Style	Modern
• **Materials & Care**	
Material	Metal
Product Care Instructions	Wipe with Damp Cloth
Furniture Finish	Painted

Installation type Screw-In

Leg style Modern

About this item

- ✓Heavy Duty & Large Furniture Leg Levelers- Allow easy leveling of furniture at home, office, restaurant, school or café, to match in same height. They allow raising your furniture, and help slide your furniture at ease !
- ✓Adjustable Leveling Feet - 1.75" long steel insert with 3/8-16" thread; Large Commercial Quality 1 3/8" Diameter 1/2" Thick Base and Fully Adjustable Height from 3/4" to 1 3/4" for Maximum Support and Adjustability.
- ✓1320LBs Max Support- Commercial quality furniture levelers, T-nuts and thread insert are made of steel that support over 330LBs per feet, a set of four support furniture weight 1320LBs!
- ✓For All Floors- Universal Nylon bottom that work for all floors such as hardwood/tile/carpeting floors. Comes with separate high density thick felt for hardwood floor to protect floor from scratches or harsh noises.
- ✓Easy Installation- For furniture legs with existing 3/8"-16 thread, simply screw in the leg leveler to adjust the height. Or, pre-drill a 1/2" hole and insert the Locknut with mounting screws ,stabilize the leveler and adjust to the desired height.

Anwenk Heavy Duty Furniture Leveling Feet

Adjustable Furniture leg Levelers for Tables Chairs Cabinets Sofa 3/8"-16 Thread, Support 1320LBs

Set of 4-Adjustable Heavy Duty Furniture Levers 3/8-16 Inch Thread Size.

These adjustable furniture levelers help save your furniture! No more folded cardboard under table leg just to have a peaceful sit.

Easy to install and adjustable height as your require. Suitable for various purposes ,stops wobbling on uneven floor and reduces vibration,allow removing furniture at ease. They work out perfectly as replacement in your table, office table, sofa, couch, ottoman bench, chair, bed and more!

Support max ***1320LBs***, universal nylon bottom for all type of floors, perfect choice for heavy furniture.

Package includes:

- 4x Furniture levelers;
- 4x Furniture T-nuts ;
- 12x Mounting Screws;
- 4x Felt.

Features:

- Used as furniture replacement feet or install in wood furniture leg by drilling a 1/2" hole and inserting Locknut.
- The leg levelers allow easy leveling of your furniture and adjust the height of furniture.
- Heavy duty levelers that support max 330lbs per leveler. (Set of 4 Supports over 1320lbs)
- Separated high density felt floor protectors to allow your furniture to glide smoothly and quietly along hardwood floor to prevent scratches, scrapes or harsh grating.
- Steel thread insert and t-nuts, commercial quality standard.
- Adjustable Height from 3/4" to 1 3/4" .

Product information

Item details

Brand	Anwenk
NumberOfPieces	4
Manufacturer	Anwenk
Customer Reviews	4.6 *4.6 out of 5 stars* 435 ratings 4.6 out of 5 stars

- **User guide**

Mount Type	Screw-In
Recommended Uses For Product	Tables, chairs, cabinets, sofas, and other furniture
Specific Uses For Product	furniture leveling in uneven flooring, reducing vibration in furniture, facilitating furniture movement on various floor types

Tynulox 5/8" OD 304 Stainless Steel Tube (12 inch Length, Thickened Pipe Wall), 304 Stainless Steel Weldable Tubing Round Metal Pipe, Industrial Straight Tube, 2 Pcs

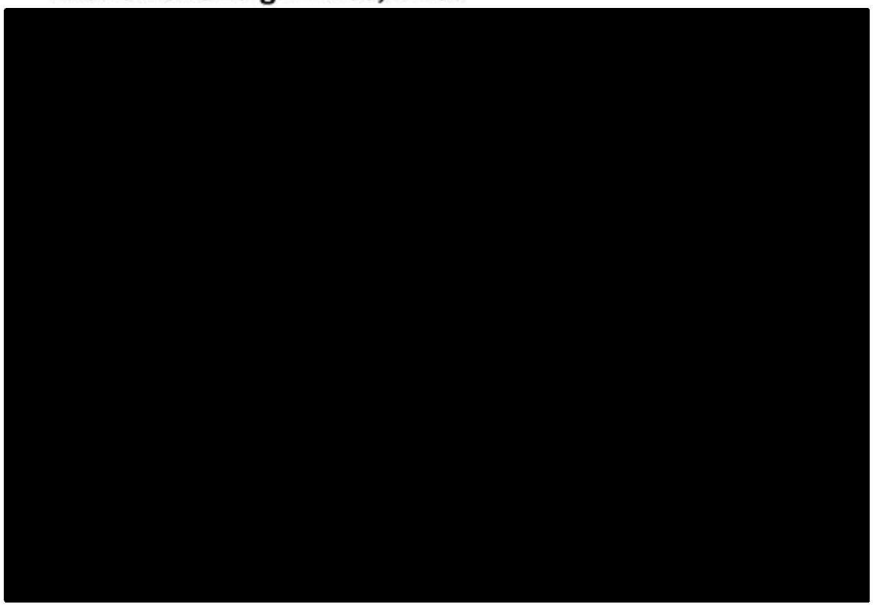

Brand	Tynulox
Material	Stainless Steel
Colour	Silver
Product Dimensions	30.5L x 1.6W Centimetres
Inside diameter	0.63 Inches
Item weight	0.34 Kilograms
Nominal wall thickness	1.5 mm
Outside diameter	16 Millimeters

Item length	12 Inches
UPC	756166603905

About this item

- 【Tube Size】-16mm(5/8") OD, 1.5mm(3/50") Wall Thickness,300mm(11.8") Length, Pack of 2.
- 【Material】-304 stainless steel material, with high strength and good weldability.
- 【Surface Treatment】-The stainless steel pipe adopts polishing process, which is more beautiful and durable.
- 【How to Use】-According to the required length, use professional equipment for processing such as threading or welding.
- 【Applications】-Used in industry, food production equipment, auto parts, medical equipment, construction, chemical, agricultural, marine parts such as frames, handicrafts, garden products, railings, shop fittings and furniture.

Technical Details

Manufacturer	Yirde
Product Dimensions	30.48 x 1.59 x 0.1 cm; 340 g
Size	5/8"OD
Colour	Silver
Style	12" Length
Material	Stainless Steel
Inside Diameter	0.63 Inches

Batteries Included?	No
Batteries Required?	No
Item Weight	340 g

Product description

Wide Applications

- Used in industry, ship models, handicrafts, pipelines, mechanical structural components, etc. Especially in living decoration and industry, such as frames, crafts, gardening products, railings, shop fittings and furniture.

Specifications

- *Name*: stainless steel tube
- *Material*: 304 stainless steel
- *Length*: (10"-12") 250-300 mm
- *OD*: (1/8"-1") 3-12.5mm
- *Thickness*: (1/64"-1/16") 0.5-1.5mm

Package Content:

- 2 x Stainless Steel Round Tubes

Buyer's remarks

- Light shooting and different displays may cause the color of the items in the pictures to be slightly different from the real ones.
- Please allow a difference of 1-3mm due to manual measurement.
- Due to the manufacturing process and inevitable objective reasons, slight scratches may appear on the surface.

Uxcell R188-2RS Deep Groove Ball Bearing, 5pcs 1/4" x 1/2" x 3/16" Chrome Steel Z2 Double Rubber Sealed Bearing



Brand	uxcell
Material	Chrome Steel
Bearing number	R188-2RS
Item thickness	0.19 Inches
Specification met	ABEC 3
Bearing type	Ball Bearing
Compatible lubricant	Grease
Outside diameter	0.5 Inches
Manufacturer	uxcell

About this item

- Size: Model: R188-2RS; Dimension: 1/4" x 1/2" x 3/16"(Inner Dia*Outer Dia*T)
- Double-sided Rubber Seal: This bearing is equipped with a double-sided rubber seal, which effectively prevents the entry of dust and moisture extending the service life of the bearing and maintaining optimal performance.
- Chrome Steel Material: Deep groove ball bearings are made of quality chrome steel with excellent strength, hardness, wear resistance and corrosion resistance. It can withstand significant radial and axial loads, providing reliable support in a variety of applications.
- Grease Lubrication Method: This bearing uses grease as the lubrication method, which can provide a lasting lubrication effect during bearing operation, reduce friction and wear, protect the bearing, and extend the maintenance cycle.
- Wide Application: widely used in high-speed rotating equipment, such as power tools, motors, fans, rollers, etc., as well as household appliances and office equipment. In addition, since the lubrication method is grease, the bearing is also suitable for some equipment where conventional lubrication is impossible or inconvenient, providing long-term and reliable lubrication.

Product details

- **Parcel Dimensions** : 9.3 x 6.1 x 1.3 cm; 15 g
- **Manufacturer** : uxcell
- **ASIN** : B0CLVDZD8Q

Product description

- Double-sided Rubber Seal: This bearing is equipped with a double-sided rubber seal, which effectively prevents the entry of dust and moisture extending the service life of the bearing and maintaining optimal performance.
  Chrome Steel Material: Deep groove ball bearings are made of quality chrome steel with excellent strength, hardness, wear resistance and corrosion resistance. It can withstand significant radial and axial loads, providing reliable support in a variety of applications.
  Wide Application: Widely used in high-speed rotating equipment, such as power

tools, motors, fans, rollers, etc., as well as household appliances and office equipment. In addition, since the lubrication method is grease, the bearing is also suitable for some equipment where conventional lubrication is impossible or inconvenient, providing long-term and reliable lubrication.

Selecting Guide:

Open Type (No Designation Suffix) - Suitable for high-speed and even very high-speed operation.

Shielded (Designation Suffix Z/ZZ) - High speed. Protect from dirt and debris.

Sealed (Designation Suffix RS/2RS) - Made of sheet steel reinforced nitrile butadiene rubber (oil- and liquid-resistant). Lower limit speed than metal shield bearings.

Specification:

Model: R188-2RS
Sealed Type: Double Sealed
Inner Race/Outer Race Material: Chrome Steel (GCr15)
Cage Material: Stamping Steel
Dimension: 1/4" x 1/2" x 3/16"(Inner Dia*Outer Dia*T)
Accuracy Class: P6(ABEC3)
Noise Level: Z2
Package Content: 5pcs x Deep Groove Ball Bearings

Cyleodo Garden Auger Spiral Drill Bits, 4X12" Post Hole Diggers Auger Drill Bit Drill Auger Attachment with Non-Slip 3/8" Hex Drive Drill



Material	Alloy Steel Steel
Cutting diameter	4 Inches
Finish type	Painted
Shank type	Hex
Cutting angle string	360 Degrees

About this item

- 【Widely Application】Bulb & Bedding Plant Augers work with many kinds of soil but work fast and best for garden soft soil and sand.Perfect for planting tulips, iris, bulbs, bedding plants, potted plants, vegetables, flowers and seedlings. Also great

for digging weeds up by the roots.Effortlessly dig post holes or even bring it on vacation to drill a hole in sand to anchor your beach umbrella.

- 【Updated Shaft】Updated shaft with sturdy metal is made of heavey alloy steel,so that it will not be broken or twisted so easily.The Auger drill bit with glossy black painted can withstand a lot of garden work.The shaft interfaces with the drill is squared off instead of rounded.These design made solid contact with drill chuck better.
- 【Suitable Size】Attach the garden auger to any electric or cordless drill 3/8" or larger to dig holes in your garden with ease. 18V or greater drill recommended,for cordless drills a minimum 14V drill is recommended;Easy creating hole 4inch wide and 12inch deep.The drill is not included.
- 【30 Day No Risk Guarantee】 - This product is equipped with a no risk 30 day satisfaction guarantee.
- 【Efficient Garden Work】Our drill auger can dig hundreds of holes in a short time,which save your back and your time.It's a very nice choice for gardening tool.

Product details

- **Parcel Dimensions** : 31.1 x 10.2 x 10.1 cm; 680 g
- **Manufacturer** : Cyleodo
- **ASIN** : B08C24NYZF

BBDINO Silicone Mold Making Kit, Super Elastic Mold Making Silicone Rubber, Liquid Silicone for Mold Making, N.W. 21.2 oz, 1:1 by Volume, Ideal for Casting 3D Silicone Molds| Food Molds, Jade Green



Material	100% silicone rubber
Colour	Jade Green
Brand	BBDINO
Item dimensions L x W x H	14 x 13.3 x 6.3 Centimetres
Shape	Liquid
Number of pieces	2

Manufacturer SIPOLYSUN TECHNOLOGY

About this item

- [Mold Making Kit] This silicone mold-making kit includes 2 bottles, part A and part B, each 10.58 ounces, totaling 21.16 ounces. The bottles are also very simple to use and come with tinfoil that is sealed within the top, providing double assurance that there will be no leaks.
- [Easy Mixing and Pouring] This liquid silicone for mold making is intended for the creation of all varieties of silicone molds and has a low viscosity to make it simple to mix and pour silicone material without the need for a pressurized pot or degassing system. The molds created using this liquid RTV silicone rubber for mold making have excellent flexibility and strength. Excellent for creating both 3D and flat silicone molds, this silicone mold-making kit is extremely simple to demold.
- [Fast Curing] It has 30 minutes of working time and 4 hours of curing time at a temperature of 25 °C (73.4 °F) at room temperature. This silicone for mold-making cures at room temperature with very little shrinkage, and the heat cure will shorten the cure time.
- [Wide Application] The BBDINO super elastic pourable silicone mold-making kit is made of platinum-grade silicone. It is used for a variety of arts and crafts projects, including the casting of resins, wax, gypsum, concrete, soap, and candles ;
- [Long Shelf Life and Vivid Color] The liquid silicone has a very long shelf life of over a year. You can easily store the leftover materials for use at a later time by covering the cap, which means there is absolutely no waste. Additionally, this silicone mold maker rubber is designed with a stunning jade green color so that you can easily tell if parts A and B are mixed evenly enough to create artwork and molds in a stunning jade-look color.
- BBDINO provides all platinum silicone lines, the hardness range from super soft 00-30 to Super Clear 35A, including 10A, 15A, 20A and 30A in middle range, the whole silicone line are designed for easy using, even mold making beginners can use BBDINO mold making silicone to make silicone molds easily.
- Moreover, BBDINO provide rich color solutions, for the colored silicone, we have Jade Green, Sapphire Blue, Warm Orange for choosing, and we also provide silicone pigments, 9-color pack included 9 selected silicone pigments: 6 basic colors which

you can use them to create endless colors, and 3 skin tone: light flesh, dark flesh and blood. also we provide options or pure black and White silicone pigment in bigger size.

Product information

Item details

Brand Name	BBDINO
Manufacturer	SIPOLYSUN TECHNOLOGY
ASIN	B09BFGQ37Q

- **Style**

Colour	Jade Green
Shape	Liquid

- **Additional details**

material-type	100% silicone rubber
Item Dimensions	14 x 13.3 x 6.3 Centimetres