Letter of Transmittal

December 8, 2021

Midhun Babu
Engineering Technologist & Technical Projects Lead
750 Bradford St.
Duha Color Services
Winnipeg, MB
R3H 0N3

Dear Mr. Babu,

We are pleased to inform you that Team 4 has successfully designed a system for VOC emission reduction from the rooftop exhaust vent.

Enclosed is the report titled "Duha Color Services: VOC Emission Reduction". This report provides information on the project background, final design concept background and a thorough explanation of the design process performed to achieve the proposed final design. Details of the final design include a comprehensive design summary, a cost analysis, and a risk analysis.

The team would like to acknowledge the help received throughout the duration of the project from the project advisor, technical communications instructor and Duha Color Services. The project advisor, Meghan Guyot, contributed to the success of the report by providing clarity on the different design phases, content requirements of the report, and providing professional engineering advice. The technical communications instructor, Aidan Topping, assisted in IEEE formatting and references of the report as well as assisted with report writing mechanics. Duha Color Services, provided all necessary information needed to complete a final design.

Best regards,

Jingyu Bai

Andrew Charles

Omer Sajjad

Paulina Zielonka



University of Manitoba

Duha Color Services: VOC Emission Reduction
Final Design Report

Price Faculty of Engineering



Report Prepared For: Dr. Paul Labossiere P.Eng.
Dr. Meghan Guyot P.Eng.
Aidan Topping
Duha Color Services

Report Prepared By: Jingyu Bai
Omer Sajjad
Andrew Charles
Paulina Zielonka

Date of Submission: December 8th, 2021

Executive Summary

This report outlines the "VOC Emission Reduction" project presented by Duha Color Services. Duha Color Services produces color marketing tools for an international market. Part of the production process exposes the tools to a high heat intensive process in order for the paint to dry. This step generates a large volume of volatile organic compounds (VOC) which are exhausted to the outside air. The objective of the project is to reduce the transmission of these volatile organic compounds by 95% as they are harmful to human health and the environment.

The method selected to reduce the VOC concentrations from the exhaust air was an activated carbon adsorber system with steam regeneration. Activated carbon adsorbs the VOCs present in the exhaust air allowing for only purified air to be exhaust to the environment. A steam regeneration system is then used to remove the VOCs from the carbon so it can be re-used for VOC adsorption and handled as non-hazardous waste. Once the steam removes the VOCs from the carbon, the carbon is dried and can be re-used.

This report contains a detailed introduction of the project background, the ideal design target specifications, the project constraints, background on activated carbon, a detail design of the complete activated carbon system, and a final bill of material (BOM). Furthermore, government incentives for the project were determined and a risk analysis for the project was completed. The detail design of the system includes the calculations for the VOC abatement using activated carbon followed by the design of a vertical carbon vessel and a horizontal carbon vessel. The detail design also includes a complete steam regeneration system design with inlet/outlet parameters, boiler and condenser selection, pressure drop, wastewater, and drying calculations.

The final design equipment is summarized as follows: 2 activated carbon beds, one boiler, one condenser, multiple valves, and piping. The final capital cost for the project was determined to be $190,010 and final yearly upkeep cost of $2,980,582. This costs correlates to the 30-day carbon refill scenario. The size of the activate carbon beds was determined to be 4,017 lbs/vessel. The final mass of the design was predicted to be 8,052 lbs. The final design was able to meet the objective of a 95% reduction of VOCs from the rooftop exhaust.

Contents

1 Introduction . . . **1**
1.1 Project Background . . . 1
1.2 Project Scope . . . 2
1.3 Project Requirements and Specifications . . . 3

2 Activated Carbon Background . . . **5**

3 System Overview . . . **6**

4 Subsystem Analysis . . . **8**
4.1 Amount of Carbon Required for VOC Abatement . . . 8
4.1.1 Carbon Transfer to Vessel . . . 10
4.2 Activated Carbon Vessel Sizing . . . 10
4.2.1 Vertical Vessel . . . 11
4.2.2 Horizontal Vessel . . . 12
4.2.3 Vessel Mass . . . 14
4.2.4 Other Considerations for Vessel Design . . . 15
4.3 Steam Regeneration System Assessment . . . 15
4.3.1 Steam Inlet Physical Properties . . . 15
4.3.2 VOC Desorption Time and Steam Inlet Velocity . . . 16
4.3.3 Volume of Wastewater Generated Per Cycle . . . 17
4.3.4 Wastewater Collection . . . 18
4.3.5 Pressure Drop Due to Carbon in the Vessel . . . 19
4.3.6 Carbon Drying Time . . . 20
4.3.7 Other Considerations for Design Optimization . . . 22

5 Economic Analysis . . . **23**
5.1 Total Adsorber Equipment Cost . . . 23
5.2 Steam Regeneration Equipment Cost . . . 24
5.3 Yearly Upkeep Costs . . . 25
5.3.1 Carbon Costs . . . 25
5.3.2 Steam and Wastewater Disposal Costs . . . 26
5.4 Total Cost BOM . . . 26
5.5 Government Environmental Incentives . . . 28

6 Risk Analysis . . . **29**

7 Conclusion & Recommendations . . . **31**

8 References . . . **32**

Appendix A Exhaust Stack VOCs Testing . . . **34**

List of Figures

1 Painted paper sheet exiting the heating tunnel. 1
2 Target exhaust. 2
3 Duha Colour Services roof schematic. 2
4 Example activated carbon process. 5
5 System line diagram. 6
6 System process diagram. 7
8 Carbon transfer. 10
9 Vertical design parameters. 12
10 Horizontal design parameters. 14
11 Natural gas boiler. 16
12 Steam flow for vertical and horizontal vessels. 17
13 Shell and tube condenser. 19
14 Activated carbon drying experiment. 21

List of Tables

I PROJECT NEEDS 3
II PROJECT METRICS 4
III VOC CONCENTRATION AT OUTLET 4
IV UNIT CONVERSION OF VOC CONCENTRATIONS 8
V UNIT CONVERSION OF AIRFLOW 9
VI CARBON REQUIREMENT DATA 9
VII CARBON REQUIREMENT WITH STEAM REGENERATION 9
VIII VERTICAL DESIGN SPECIFICATIONS 12
IX HORIZONTAL DESIGN SPECIFICATIONS 13
X VESSEL MASS 14
XI STEAM REGENERATION - STEAM INLET PHYSICAL PROPERTIES 16
XII BOILING POINTS OF EXHAUST VOC CHEMICALS 16
XIII STEAM REGENERATION SIMULATION PARAMETERS 17
XIV WASTEWATER GENERATED FOR VARIOUS VESSEL SIZES 18
XV CARBON PARTICLE PROPERTIES FOR ESTIMATION 20
XVI PRESSURE DROP IN VARIOUS VESSELS 20
XVII CARBON DRYING TIME 22
XVIII VESSEL COST 23
XIX CARBON COST 23
XX TOTAL ADSORBER COST 24
XXI STEAM REGENERATION BOM 24
XXII AMOUNT OF CARBON REPLACEMENTS 25
XXIII YEARLY CARBON REQUIREMENTS 25
XXIV CARBON DISPOSAL COSTS 25
XXV YEARLY STEAM COST 26
XXVI YEARLY WATER DISPOSAL COST 26
XXVII TOTAL CAPITAL COST 26
XXVIII TOTAL YEARLY UPKEEP 27
XXIX BILL OF MATERIALS 27
XXX POTENTIAL PROJECT FUNDING MATRIX 28
XXXI RISK REGISTER - RISK IDENTIFICATION 29
XXXII RISK REGISTER - QUALITATIVE RISK ASSESSMENT 30
XXXIII RISK REGISTER - RISK RESPONSE STRATEGY 30
XXXIV FINAL DESIGN SUMMARY 31

Glossary of Terms and Abbreviations

Activated Carbon - a form of carbon having very fine pores: used chiefly for adsorbing gases or solutes, as in various filter systems for purification, deodorization, and decolorization [1].

Adsorption - The property of a solid or liquid to attract and hold to its surface a gas, liquid, solute, or suspension [1].

Bed Velocity - the superficial gas velocity through the bed that must be maintained for optimum adsorption [2].

BOM - Bill of Materials. A list of materials required for the system.

Carbon Bed Access - Additional space above and below the carbon bed to allow for physical access to the carbon bed [2].

Carbon Bed Thickness - The height of the carbon in the bed [2].

Gas Distribution Allowance - Additional space above and below the carbon bed for distribution and disengaging of the gas stream [2].

Impregnated Carbon - Carbon with a fine distribution of chemicals that greatly enhance the carbon's adsorptive capacity through a synergism between the chemicals and the carbon. Provides a cost-effective way to remove impurities from gas streams which would otherwise not be possible [3].

MEK - Methyl Ethyl Ketone. A chemical present at the target exhaust.
Saturated Carbon - Carbon that has adsorbed its maximum amount of volatile organic compounds.

Steam Regeneration - The process in which high temperature steam is used to remove chemicals from the surface of carbon.

VOC - Volatile Organic Compounds. An organic chemical that can be harmful to the body with repeated exposure.

VOC Desorption Time - The amount of time taken for VOCs to be removed from activated carbon.

Wastewater - Water that has been used in chemical processing and is not safe for standard disposal.

1 Introduction

For the Fall 2021 Capstone Engineering Design Course, team 4 has undertaken the "VOC Emission Reduction" project with Duha Colour Services under the Duha Group. This project focuses on the efficient treatment of exhaust fumes containing a large amount of **volatile organic compounds** (VOCs) released from the paint drying process.

This report is a formal design report including the detailed specifications of the design and the key equipment components required. The selected concept for VOC emission reduction is an activated carbon filtration system combined with a steam regeneration system. The associated economics of the design including the total capital and yearly upkeep costs, as well as government funding are found in Section 5. The associated major risks related to the design are analyzed in Section 6. This section outlines the project background, scope, requirements, and specifications used to define the design parameters.

1.1 Project Background

Duha Group is a manufacturer and distributor of colour marketing tools (i.e., colour fan decks) with a leading reputation around the globe. Based on their mission of "Connecting the world with colour", Duha Group has expanded their markets and factories from North America to nearly every market in the world. These markets include Australia, Germany, and China [4]. Duha Group specializes in colour strategy and has developed innovative painting approaches. The head office for Duha Colour Services is located in Winnipeg, Canada along with the company's largest manufacturing operation.

One key step of the colour fan deck manufacturing process involves pumping paint onto a paper roll slowly and precisely followed by transporting the roll through a heated tunnel. The heated tunnel runs at approximately 220°F in order to fully dry the paint while maintaining a high quality finish. A large amount of VOCs are generated from this heating process that is used to cure the fresh, solvent based paint. An example of a dry sheet exiting the heating tunnel can be seen in Fig. 1. The VOCs generated in the heating tunnel travel through the ducts to get released through the exhaust vent on the roof. Even though the VOC levels being output from the exhaust stack are currently under the allowable emissions level, Duha Colour Services aims to reduce their VOC emissions even further to present a higher professional standard of ethics.



Fig. 1. Painted paper sheet exiting the heating tunnel.

Duha Colour Services is looking for a new approach to reduce the VOC emissions from a specified exhaust. The target rooftop exhaust for this project can be seen in Fig. 2. The new method must fall within the project budget which has two components, the capital costs and the annual upkeep costs of the system. Furthermore, the new method must also achieve the objective while adhering to all of the project constraints as indicated by Duha Color Services.



Fig. 2. Target exhaust.

1.2 Project Scope

The project aims to develop a suitable solution for reducing the VOC emissions produced by the heating tunnel connected to the target exhaust. The solution includes designing a system to eliminate the VOCs at the exhaust within a designated 12 feet x 12 feet area on the roof as shown in Fig. 3. This final report aims to illustrate the detailed specifications of the design to all the stake holders, including the University of Manitoba and Duha Colour Services (herein referred to as "Duha"). The final deliverables for Duha include the size and weight load of the system, **bill of material** (BOM), an aerial system schematic of placement on roof, and any additional equipment drawings (if applicable).

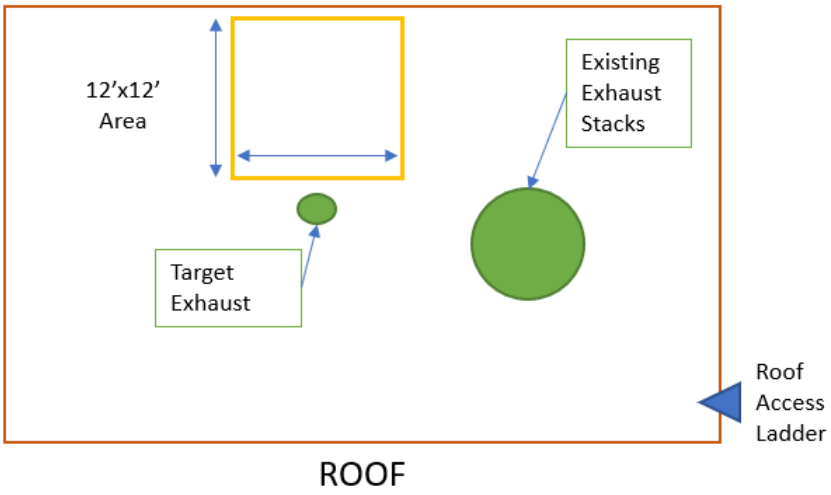

Fig. 3. Duha Colour Services roof schematic.

1.3 Project Requirements and Specifications

The requirements and specifications constraining the project are defined in Table I. Each requirement or specification is summarized and scored based on their importance to the project with a 5 representing the greatest importance and a 1 representing the least importance.

TABLE I. PROJECT NEEDS

#	Need	Importance
1	The system shall reduce the VOC emissions from paint line	5
2	The system must be able to withstand Winnipeg weather	5
3	The system shall not incorporate thermal oxidation to remove VOCs	5
4	The system must be able to operate in the presence of all VOC emissions	4
5	The system shall be affordable for Duha Color Services	4
6	The system must be able to operate above the maximum process speed	3
7	The system shall allow for a minimal amount of operators and supervision	3
8	The system shall not exceed the maximum weight capacity of the roof	2
9	The system must fit in the designated unit area on the roof of the Duha building	2
10	The system shall be easy to maintain	2

The system being able to reduce VOC emissions is the primary requirement of the project and therefore all concepts must be able to meet it. Two requirements set by Duha must be strictly met, namely, withstanding the weather of Winnipeg and the system not using thermal oxidation to remove VOCs. The latter is a safety requirement set by Duha due to their previous negative experiences in using this kind of technology. The system being able to operate in the presence of all VOC emissions is important given the project's scope. However, if a VOC emission is in low concentration, it is possible to ignore it making it less important than the overall reduction of VOC emissions. The system not exceeding the maximum weight capacity of the roof is a requirement set due to the roof weight limitations and must be considered during design. However, should the total system weight exceed the allowable roof limit, the system may be located on the ground. The system being able to fit onto the roof of the Duha building is preferred but not a strict requirement should the system be located on the ground.

Regarding the economical and maintenance aspects, although the system's affordability is important, a relatively high budget range was given making it less important than some other requirements. The system operating above maximum operational speed and having minimal operators is another requirement set by Duha as they want to ensure any future increases to their process speed will not affect the system and that it will not add a significant amount of work requiring multiple operators. Finally, the system being easy to maintain is a requirement set so that Duha can do repairs and maintenance in-house instead of requiring outside contractors to be scheduled.

With the requirements of the system defined, the associated metrics and values are summarized in Table II. These values will be used to evaluate how well each concept being considered meets the requirements of the project.

TABLE II. PROJECT METRICS

Metric #	Metric	Units	Marginal Value	Ideal Value
1	VOC Emission Concentration	$\mu g/m^3$	See Table III	
2	System mass	lbs	15480	<15480
3	System area	ft x ft	12 x 12	<12 x 12
4	Process operational speed	ft/min	80	100
5	Time taken to conduct maintenance	min	120	<120
6	Ease of maintenance	$subjective$	Medium Difficulty	Very Easy
7	System cost	CAD	100k-150k	80k-100k
8	Area of VOC outlet	ft x ft	24-1/8" x 16-1/8"	-
9	Number of operators	$people$	2	0-1
10	Frequency of maintenance	$days$	30	60
11	Percentage of VOC emission decreased	%	95	100
12	Air speed	ft/min	2000	-
13	Tunnel Temperature	$^\circ F$	220	-
14	Corrosion Resistance	$mm/year$	3	1
15	Production Hours Per Year	$hrs/year$	6240	7072
16	Roof Height	ft	18	-
17	Yearly Upkeep Cost	CAD	20,000	10,000

The primary metrics that will be used to evaluate designs are the VOC emissions concentration, system cost, system area, air speed, corrosion resistance, frequency of maintenance, system mass, production hours per year and yearly upkeep cost. Finding a design that is already established and covers all the requirements and metrics is unlikely. Therefore, metrics such as system cost, system area, and number of operators not likely to be exact values. Instead, these metric values will be rough estimates to help understand the strengths and weaknesses of different designs.

To determine the corrosion resistance, a primary material for the design will be chosen to determine if it can withstand the VOC emissions present along with water. The VOC emission concentration and air speed requirements are exact to ensure the concept can handle all the emissions present. In Table III, all present VOC emissions can be seen with their individual concentrations. These values were collected by Winnipeg Air Testing whose report can be found in Appendix A. If a design can not cover all the VOCs covered in Table III, then it may be deemed unfit or will be incorporated with another design to handle any missed VOCs. Other metrics such as frequency of maintenance and percentage of VOC emission decreased may also be given estimate values if an estimate can be determined.

TABLE III. VOC CONCENTRATION AT OUTLET

Chemical	Concentration ($\mu g/m^3$)
Methyl Bethyl ketone (MEK)	360,000
Isopropanol	200,000
Ethyl acetate	150,000
n-butyl acetate	110,000
2-butoxyethanol	100,000
Ethanol	74,000
m,p-Xylene	68,000
Toluene	47,000
o-Xylene	38,000
Ethylbenzene	34,000
Total	1,181,000

2 Activated Carbon Background

To determine the best option for VOC abatement multiple methods were considered including activated carbon, photo catalyzation, non-thermal plasma, ozonation and dissolution. The activated carbon was determined to be the most applicable solution to the presented problem as it is capable of dealing with all emissions present.

Activated carbon is a commonly used solution for reducing VOC emissions due to its excellent adsorption properties [5]. Adsorption is the adhesion of atoms, ions, or molecules from gas, liquid, or dissolved solid to a surface [6]. Carbon's porous surface area provides strong adsorption forces to adsorb VOC vapor and gases, with smaller pores creating greater adsorption forces [5]. Additionally, activated carbon is durable and resistant to chemical breakdown while maintaining a low overall cost.

There are four primary types of activated carbons used for this application: wood, charcoal, coconut, and impregnated. Wood is generally less applicable for VOC abatement due to its large pore sizes that only work on large particles. Charcoal tends to be harder and more durable compared to wood; it also has smaller pores making it more applicable for VOC abatement. Coconut is often the most applicable with the smallest pore size, where 90% of the pores are micro-pores, while still being renewable and maintaining an affordable price point [7]. Finally, the last type of activated carbon that can be considered is impregnated activated carbon. Impregnated signifies that specific chemicals are added to the carbon, which will target certain VOCs in the air [3].

Activated carbon adsorption processes for VOC emission treatment can be set up in a multitude of ways. The different designs depend on the types of chemicals present in the emissions, the quantity of each chemical, and if air or water is being treated. An example of air filtration can be seen in Fig. 4 which uses two separate adsorber vessels that both have activated carbon continually added to it while any spent carbon is removed. Spent carbon is carbon that has been saturated with chemicals and can longer adsorb them. All spent carbon is moved into a regenerative process that removes the VOC concentrations from the carbon by using either vacuums, high temperature steam, or burning. By removing the VOCs from the carbon, the VOCs can be collected and disposed of either through a water disposal company or a chemical disposal company. Following the regeneration process, additional post-processing (ie. drying, cooling) would be required and the activated carbon can then be re-used. However, the activated carbon will have a lower adsorption capacity following each subsequent regeneration cycle [2]. The total amount of capacity lost during regeneration is often between 5%-10% of the original capacity and additional activated carbon must be added to the adsorber vessel to compensate for this loss [8].

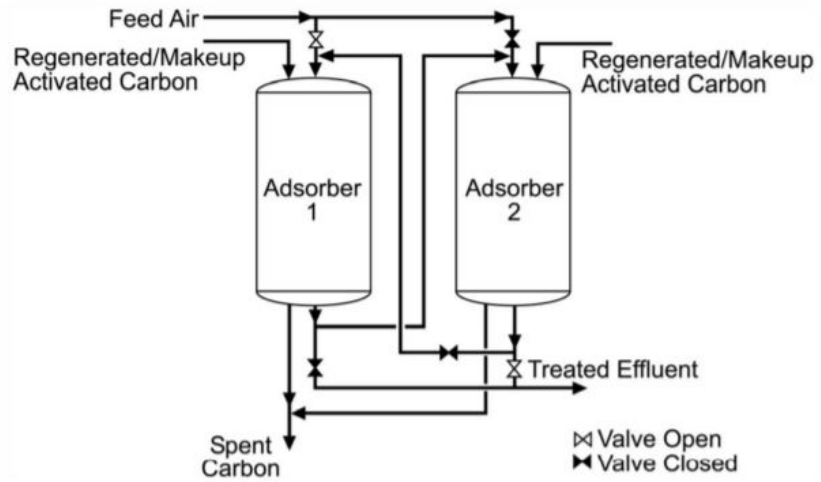

Fig. 4. Example activated carbon process (public access) [2].

For the removal of VOCs present in this project, activated carbon performs very well with the capability of adsorbing 33% of it's weight in emissions on average [9]. It also provides two options for possible configurations of the carbon vessels required. The carbon vessels can be set vertically or horizontally to better fit the vessel within the required roof area. Overall, with the only potential issue coming from the upkeep cost, an activated carbon adsorber system is the best option for the VOC reduction project.

3 System Overview

The final design of the activated carbon system was selected based on a review of similar existing systems. A two bed system was selected to allow for cycling between an active bed adsorbing the VOC exhaust gas and a second bed which is on standby following a steam regeneration process until required. Once the active bed has reached its adsorbing capacity, an event is triggered to divert VOC exhaust flow into the standby bed and the former active bed undergoes a steam regeneration process. The final design of the system is shown in Fig. 5.

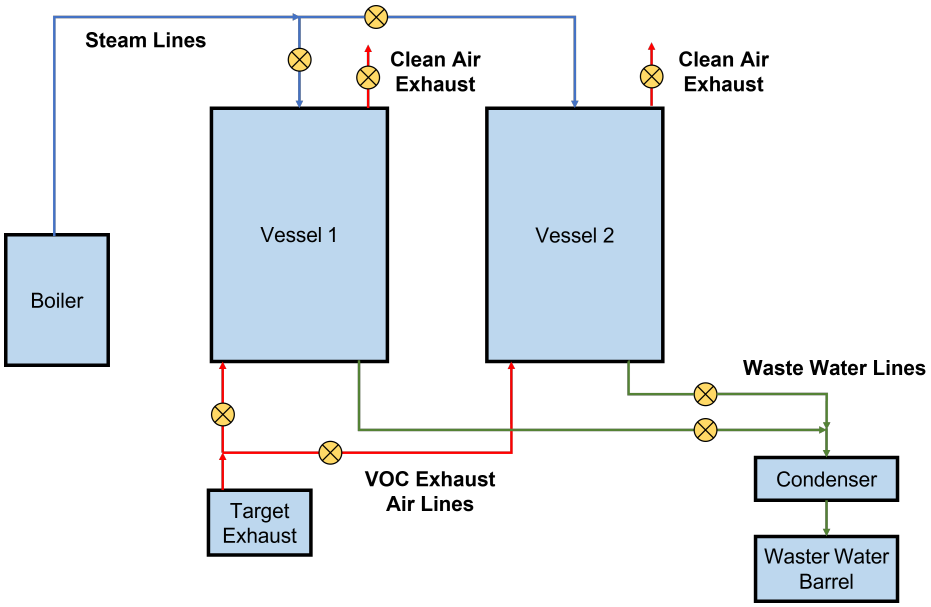

Fig. 5. System line diagram.

From this figure it can be seen that both of the vessels have one VOC exhaust inlet connection and one clean air outlet. Both vessels also have one steam inlet connection and one wastewater outlet. Valves will be used to control the flow of the steam, VOC exhaust, and wastewater so that they can be directed to and from the desired beds. The wastewater by-product will be collected in a barrel for appropriate disposal by Duha's waste management contractor, United Chemicals. The entire system can be broken down into three sub-processes: filtration, steam regeneration and carbon drying. Fig. 6 shows the breakdown of the overall process into these three sub-processes as experienced by bed 1. All of the listed processes are initiated automatically using instrumentation (ie. timers, breakthrough sensors, solenoid valves) connected to a control system.

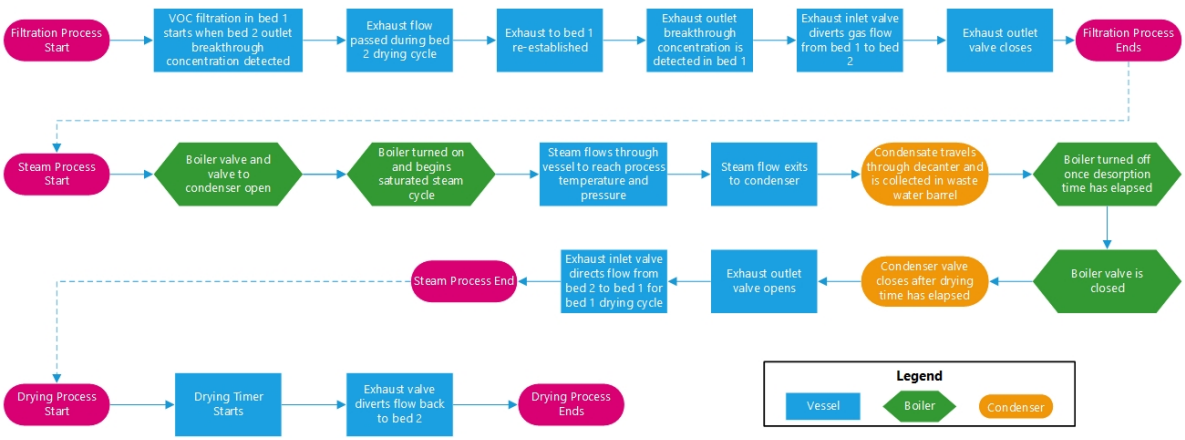

Fig. 6. System process diagram.

Filtration is the starting point for the VOC reduction. This process uses a breakthrough concentration sensor at the clean air exhaust outlet to detect if outlet concentration is equivalent to the inlet concentration. At some point during filtration, exhaust flow may be diverted to assist in the drying process of bed 2 post-steam regeneration and then diverted back to bed 1 (leaving bed 2 on standby, ready for adsorption). Once the clean air exhaust outlet reaches breakthrough, this indicates that the carbon in the bed is no longer able to adsorb the VOC emission and needs to be regenerated. Upon detection of breakthrough concentration, an event is triggered to divert flow from bed 1 into the bed 2 and the bed 1 exhaust outlet valve is closed.

The steam regeneration process starts with the boiler and condenser valves opening and letting steam flow over the used carbon until the vessel reached the process temperature and pressure. Wastewater is a by-product of the steam flow and passes through bed 1 into the condenser. The wastewater is collected in the wastewater barrel. Once the desorption time for bed 1 has elapsed, the boiler is turned off and the boiler valve shuts off. The steam regeneration process ends, which in turn leads to the drying process.

The drying process begins with exhaust flow being temporarily diverted from bed 2 to bed 1 and the the start of the drying timer in bed 1. Once the drying time has elapsed, the condenser valve closes and the exhaust air is diverted back to bed 2. The exhaust outlet valve in bed 1 opens and bed 1 is on standby, ready to begin the next adsorption cycle.
Placement of the system on the roof has two possible configurations depending on whether vertical or horizontal beds will be used. Both the boiler and condenser would be located indoors with their respective lines running to each vessel. The horizontal configuration shown in Fig. 7 is slightly larger than the target area specified but the foundation would be within the area. The vertical configuration, however, would not be able fit onto the Duha roof and would need to be moved to the ground due to its 10.68 ft diameter which still meets the system location requirement.

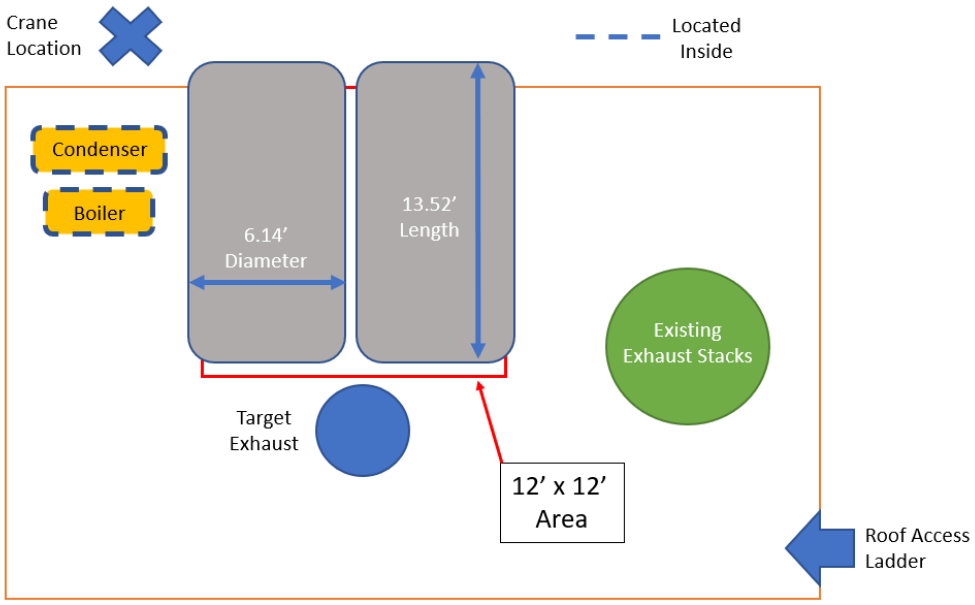

Fig. 7. Horizontal vessel roof schematic.

4 Subsystem Analysis

This section presents the calculations performed to determine the necessary parameters related to a base assessment of an activated carbon adsorber system. This includes the following:

- Amount of carbon required for VOC abatement.
- Activated carbon vessel sizing.
- Steam regeneration system assessment.

4.1 Amount of Carbon Required for VOC Abatement

Before the subsystem analysis for activated carbon can be performed, the units for VOC concentration and air flow values are converted to units that are convenient for analysis. The VOC concentrations can be seen in Table IV with concentrations converted from the provided μg/m^3 values to g/hr first, and then to lb/hr values using the exhaust flow rate.

TABLE IV. UNIT CONVERSION OF VOC CONCENTRATIONS

VOC Name	Concentration at Exhaust ($\mu g/m^3$)	Flow Rate at Exhaust (g/hr)	Flow Rate at Exhaust (lb/hr)
MEK	360,000	3,304.709	7.286
Isopropanol	200,000	1,835.949	4.048
Ethylacetate	150,000	1,376.962	3.036
n-butylacetate	110,000	1,009.772	2.226
2-butoxyethanol	100,000	917.975	2.024
Ethanol	74,000	679.301	1.498
m,p-xylene	68,000	624.223	1.376
toulene	47,000	431.448	0.951
o-xylene	38,000	348.830	0.769
ethylbenzene	34,000	312.111	0.688
Total	1,181,000	10,841.281	23.901

The unit conversion for the air flow is shown in Table V and converts from the given fpm value to a cfm value using the measured exhaust area.

TABLE V. UNIT CONVERSION OF AIRFLOW

Airflow Parameters	
Exhaust Air Flow (fpm)	2,000.00
Exhaust Area (ft^2)	2.70
Exhaust flow (cfm)	5,402.99

(REDACTED). The adsorption concentration of each chemical can be used to determine the amount of carbon required for sufficient abatement of each chemical. These values are specific to PSFilter's activated carbon and another company may provide alternative values. However, the difference between carbon suppliers is not expected to make a significant change in overall analysis.

TABLE VI. CARBON REQUIREMENT DATA

VOC Name	**Concentration at Exhaust** (lb/hr)	**Concentration at Exhaust** (lb/day)	**Carbon Adsorption Capabilities** (%)	**Carbon Requirements** (lb/day)
MEK	7.286	174.855	28.05	623.37
Isopropanol	4.048	97.142	25.24	384.87
Ethylacetate	3.036	72.856	28.85	252.53
n-butylacetate	2.226	53.428	40.95	130.47
2-butoxyethanol	2.024	48.571	47.84	101.53
Ethanol	1.498	35.942	11.77	305.37
m,p-xylene	1.376	33.028	42.05	78.55
toulene	0.951	22.828	34.51	66.15
o-xylene	0.769	18.457	42.05	43.89
ethylbenzene	0.688	16.514	38.95	42.40
Total	23.901	573.622	-	2,029.13

At a total requirement of 2,029 lbs of carbon per day for adequate abatement of the VOC emissions, a steam regeneration system will be activated every day on alternating vessels to reduce the overall yearly carbon requirements. For this design there is an expected 5% mass reduction every regeneration cycle [10]. Therefore, additional carbon will be added to the design to reduce the amount of carbon changeovers required. For system design, three situations will be considered: 14 days of operation, 30 days of operation and 60 days of operation. A total amount of carbon required for these operation times can be seen in Table VII. For all three situations, the carbon will be alternating between adsorbing and regenerating daily. For the 14 days of operation, 690 lbs of carbon will be added to get back to the 2,719 lbs required with a full replacement occurring after every other 14 day cycle. For the 30 and 60 days of operation, a full carbon replacement will be required at the end of every operation cycle. These situations are each being considered to leave options open between carbon requirements and maintenance frequency.

TABLE VII. CARBON REQUIREMENT WITH STEAM REGENERATION

Carbon Cycle ($days$)	**Days Adsorbing**	**Days Regenerating**	**Carbon Requirement** (lbs)
14	7	7	2,719
30	15	15	4,017
60	30	30	8,352

4.1.1 Carbon Transfer to Vessel

Transferring such a large mass of carbon requires additional equipment considerations and would factor into the vessel design. Carbon would be loaded into the vessel from the top using a woven container as shown in Fig. 8a and unloaded into a collection bin for removal from the bottom. A woven container provides reliable strength with a 1 tonne capacity at a lower price ($7.67 CAD) and allows the option of stackable storage with multiple containers to speed up transfer operations. The collection bin can use the same container type, only it would require a trolley to position it securely under the bed and transport it for hoist removal as shown in Fig. 8b for a vertical vessel configuration.



(a) Container example (public access) [11].

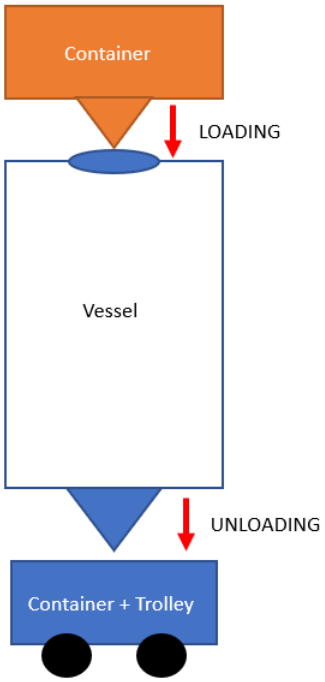

(b) Carbon transfer process for a vertical vessel.

Fig. 8. Carbon transfer.

For a system located on the roof, a jib crane would be required to hoist the carbon to load it into a vessel. Crane costs will be excluded from the total cost and the BOM due to quotation replies not being received in time. Another consideration for a crane installation would be that a structural engineer would need to assess how to reinforce the roof due to the bending loads generated [12].

4.2 Activated Carbon Vessel Sizing

This section outlines the vessel dimensions, vessel mass, and other considerations for vessel design. For the vessel dimensions, both a vertical and horizontal vessel will be considered which will be carried through the rest of the subsystem analysis. All equations used in this section were sourced from the "Carbon Adsorber" document created by the Environmental Protection Agency unless otherwise stated [2].

4.2.1 Vertical Vessel

For a vertically aligned vessel the vessel diameter can be approximated using Equation 1 where Q' is the volume flow rate which is 5,403 cfm and v_b is the bed gas velocity of 65 m/s which was determined based on carbon bed adsorber company values [2].

$$D = (\frac{4Q'}{\pi v_b})^{1/2} \tag{1}$$

$$D = (\frac{4(5403)}{\pi(65)})^{1/2} = 10.28\ ft$$

The length of the vessel can be approximated using Equation 2 where t_b represents the carbon bed thickness and t_{ag} represents the carbon bed access and gas distribution allowance.

$$L = t_b + t_{ag} \tag{2}$$

The access and gas distribution allowance varies from two to six feet depending mainly on bed diameter. For this bed, a value of 4 ft will be used for approximations. The carbon bed thickness can be calculated using Equation 3 where M'$_c$ is the amount of carbon per vessel which is 2,719 lbs of carbon, ρ_b is the carbon bulk density of 30 lb/ft^3.

$$t_b = \frac{\frac{M_c}{\rho_b}}{\frac{Q}{v_b}} \tag{3}$$

$$t_b = \frac{(\frac{2719}{30})}{(\frac{5403}{65})} = 1.09\ ft$$

With a t_b value of 1.09 ft and a t_{ag} value of 4 ft the final length can be determined as:

$$L = 4 + 1.09 = 5.09\ ft$$

With this information, the surface area of the vessel can be determined using Equation 4. This value will be significant when determining the cost of the vessel.

$$S = \pi D(L + \frac{D}{2}) \tag{4}$$

$$S = \pi(10.28)(5.09 + \frac{10.28}{2}) = 330.64\ ft^2$$

Next, the total vessel volume is calculated using Equation 5.

$$V = \pi(\frac{D}{2})^2 L \tag{5}$$

$$V = \pi(\frac{10.28}{2})^2(5.09) = 422.94\ ft^3$$

Finally, the vessel thickness can be determined using Equation 6 [13]. In this equation t_v is the vessel thickness, P is the pressure of steam during regeneration which is 230.27 psi for all cases, S is the maximum allowable stress for 304 stainless steel which is 25,400 psi, E is joint efficiency which is 1 for all cases [14]. For this example calculation R is the internal vessel radius which is 61.68 inches, and finally F_s is a safety factor to account for any additional factors such as carbon weight that may effect the vessel thickness.

$$t_v = F_s \frac{PR}{SE - 0.6P} \tag{6}$$

$$t_v = 1.5\frac{230.27(61.68)}{(25400)(1) - 0.6(230.27)} = 1.03\ inches$$

A summary of these values, as well as the values calculated for the 30 and 60 days of operation, are shown in Table VIII.

TABLE VIII. VERTICAL DESIGN SPECIFICATIONS

Vessel Specifications	14 Day Cycle	30 Day Cycle	60 Day Cycle
Amount of Carbon (lbs)	2719	4017	8352
Vessel Diameter (ft)	10.28	10.28	10.28
Bed Thickness (ft)	1.09	1.61	3.35
Carbon Bed Access (ft)	4	4	4
Vessel Length (ft)	5.09	5.61	7.35
Vessel Surface Area (ft^2)	330.64	347.48	466.21
Vessel Volume (ft^3)	422.94	466.21	610.96
Vessel Thickness (in)	1.03	1.03	1.03

A depiction of the parameters listed in Table VIII can be seen in Fig. 9. The carbon is kept in the center of the vessel on a mesh sheet to allow for better gas distribution.

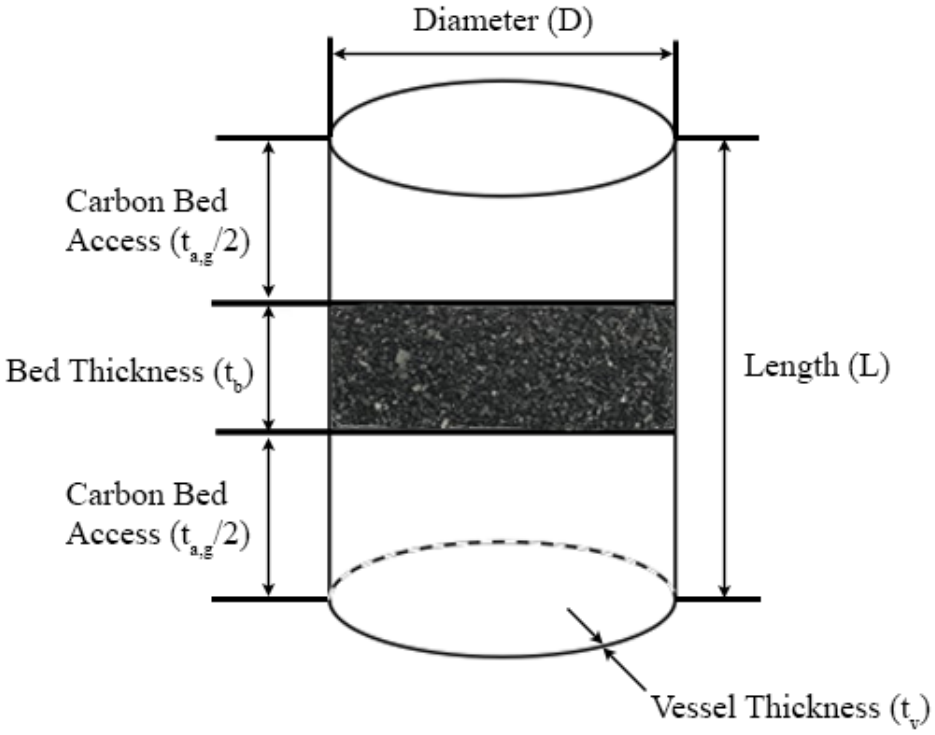

Fig. 9. Vertical design parameters.

4.2.2 Horizontal Vessel

For a horizontally alligned vessel the vessel diameter can be approximated by Equation 7.

$$D = \frac{0.127 v_b M_c'}{Q'} \tag{7}$$

Where M'$_c$ is the amount of carbon per vessel which is 2719 lbs of carbon, v$_b$ is the velocity bed speed which is 65 m/s and the Q' is the volumetric flow rate which is 5,403 cfm.

$$D = \frac{0.127(65)(2719)}{5403} = 4.16ft$$

The length of the horizontal vessel can be approximated using the same parameters as the previous equation, however substituted into equation 8.

$$L = \frac{7.87}{M_c'}(\frac{Q'}{v_b})^2 \tag{8}$$

$$L = \frac{7.87}{2719}(\frac{5403}{65})^2 = 19.98ft$$

Both the surface area and volume can be determined using Equations 4 and 5 respectively.

$$S = \pi(4.16)(19.98 + \frac{4.16}{2}) = 288.00ft^2$$

$$V = \pi(\frac{4.16}{2})^2(19.98) = 271.08ft^3$$

The vessel thickness can be calculated again using Equation 6.

$$t_v = 1.5\frac{230.27(24.96)}{(25400)(1) - 0.6(230.27)} = 0.53inches$$

Finally, to determine the carbon bed thickness, Equation 9 can be applied.

$$t_b = 2\sqrt{\frac{\frac{M_c}{\rho_c}}{\pi L}} \tag{9}$$

Here t_b is the bed thickness, M_c is the carbon mass of 2,719 lbs, ρ_c is the carbon density of 30 lb/ft^3, and L is the unit length of 19.98 ft.

$$t_b = 2\sqrt{\frac{\frac{2719}{30}}{\pi 19.98}} = 2.40ft$$

A summary of these values as well as the values calculated for the 30 and 60 days of operation can be seen in Table IX.

TABLE IX. HORIZONTAL DESIGN SPECIFICATIONS

Vessel Specifications	**14 Day Cycle**	**30 Day Cycle**	**60 Day Cycle**
Amount of Carbon (lbs)	2719	4017	8352
Vessel Diameter (ft)	4.16	6.14	12.77
Vessel Length (ft)	19.98	13.52	6.50
Vessel Surface Area (ft^2)	288.00	320.10	516.90
Vessel Volume (ft^3)	271.08	400.50	832.61
Vessel Thickness (in)	0.53	0.69	1.23
Bed Thickness (ft)	2.40	3.55	7.38

A depiction of the parameters listed in Table IX can be seen in Fig. 10. The carbon is raised above the bottom of the vessel and held on a mesh sheet to allow for steam to flow in during steam regeneration.

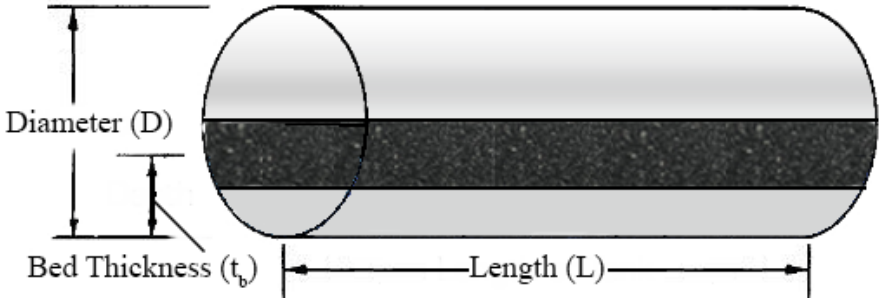

Fig. 10. Horizontal design parameters.

4.2.3 Vessel Mass

To determine the weight of the vessel, an estimate of the weight of the material is required. For this design, 304 stainless steel will be used as it is a commonly used material for carbon vessels [2]. 304 stainless steel has a density of 7.85 lb/ft^3 which provides good corrosion resistances to VOC emissions present [14]. For all design options, the corresponding t_v value will be used along with the surface area calculated in Section 4.2 to determine the mass of steel required for a hollow cylinder. Additionally, all masses will be multiplied by two as two vessels of the same size and carbon amount will be required. Therefore, the mass of steel required can be calculated using Equation 10.

$$M_{steel} = 2 * \rho_{steel} S t_v \tag{10}$$

$$M_{steel} = 2(7.85)(330.64)(\frac{1.03}{12}) = 445.56\ lbs$$

With the total mass of steel required determined for the different vessel sizes, this amount can be added to the amount of carbon required for both vessels to get an estimate of the total weight of the design as seen in Table X.

TABLE X. VESSEL MASS

Vertically Aligned			
Operation Days ($days$)	14	30	60
Total Carbon Required (lbs)	5,438	8,034	16,704
Vessel Surface Area (ft^2)	330.64	347.48	403.67
Thickness (ft)	0.0858	0.0858	0.0858
Weight of Steel (lbs)	445.56	468.26	543.98
Total Mass (lbs)	5,883.57	8,502.26	17,247.98
Horizontally Aligned			
Operation Days ($days$)	14	30	60
Total Carbon Required (lbs)	5,438	8,034	16,704
Vessel Surface Area (ft^2)	288.00	320.10	516.90
Thickness (ft)	0.0442	0.0575	0.103
Weight of Steel (lbs)	199.70	288.97	831.82
Total Mass (lbs)	5,637.70	8,322.97	17,535.82

As seen in Table X, the total mass for 60 days of operation is higher than the marginal value of 15,480 lbs which was listed as the roofs maximum weight capacity. Therefore, it is recommended that if a 60 day operation cycle is used, the vessels should be moved to the ground. Alternatively a redesign must be performed to require either less steel or carbon in order to meet the weight limit. Another option is to create a platform to more evenly distribute the load along the roof and ensure no area is above the weight limit. Additionally, the vessel can be designed out of an alternative material to lower overall weight, however, this could introduce additional costs and corrosion resistance issues.

4.2.4 Other Considerations for Vessel Design

While the analysis for the vessel dimension provides information on key design parameters, additional information would have to be considered for design optimization. First, the design will need a certain amount of insulation which is not considered when designing the vessel. This insulation will help reduce temperature losses throughout the system. The vessel thickness could be adjusted to increase the vessel's own insulation , however, external insulation would provide the best results. Second, the system will vibrate during operation which is not considered during analysis. This vibration will be more significant for larger vessels and would likely effect design and placement of the vessel and components around the vessel.

4.3 Steam Regeneration System Assessment

To reduce operating costs associated with carbon replacement, a steam regeneration method was selected to "wash out" adsorbed VOCs in the activated carbon and recycle the carbon. Steam was chosen in favour of other more common industry methods such as thermal regeneration to meet the requirement of "no thermal oxidation" outlined in Section 1.3.

The process of desorption through steam occurs by the water molecules displacing the VOCs in the porous network of a carbon grain due to elevated temperature. This, in effect, saturates the carbon with steam instead of VOCs and releases the boiled off VOCs into the steam stream. The steam-VOC gas mixture flows into a condenser where the resulting condensate is collected into a 55 gal barrel as wastewater.

The analysis for the steam regeneration system used to renew the activated carbon in each vessel can be broken down into the following list of items:

- Steam inlet physical properties.
- VOC desorption time and steam inlet velocity.
- Quantity of wastewater generated per cycle.
- Wastewater collection.
- Pressure drop in the vessel due to carbon bed.
- Carbon drying time.
- Considerations for design optimization.

Any assumptions associated with each item will be stated in their corresponding section.

4.3.1 Steam Inlet Physical Properties

Each carbon bed vessel will need to be equipped with a steam line leading from a boiler into the vessel. Boiler selection for this system is dependant on the required saturated steam conditions for VOC desorption. Saturated steam is selected over super-heated steam due to lower energy consumption and improved desorption performance. Steam process temperature is selected based on the boiling point of the VOC being removed, with 30°C - 50°C typically added for an industrial scale process [15]. Since 2-butoxyethanol has the highest boiling point (171 °C) out of all the VOCs in the exhaust gas mixture, the minimum saturated steam temperature required at the outlet of the boiler is 201 °C [16]. With these properties, a natural gas burner boiler by Hebei Yineng Boiler Co., Ltd. is selected as shown in Fig.11 [17].



Fig. 11. Natural gas boiler (public access) [17].

A summary of the inlet saturated steam conditions is shown in Table XIII.

TABLE XI. STEAM REGENERATION - STEAM INLET PHYSICAL PROPERTIES

Steam Regeneration - Steam Inlet Physical Properties	
Temperature ($°C$)	201
Pressure, P (kPa)	1587.64 [18]
Viscosity, μ ($N-s/m^2$)	15.676E-5 [19]
Density, ρ (kg/m^3)	8.00448 [18]

4.3.2 VOC Desorption Time and Steam Inlet Velocity

Many studies examine the removal of only one type of VOC that has completely saturated the carbon. One such study ran an industrial scale steam regeneration simulation for a 4,500 kg carbon bed saturated with benzene [15]. Because boiling point was chosen as the defining parameter for inlet steam conditions, with a boiling point of 80 °C [16], benzene offers a nearly nominal VOC stand in for the three highest mass concentration VOCs in the exhaust gas mixture in terms of boiling point (MEK, isopropanol, ethylacetate) as shown in Table XII.

TABLE XII. BOILING POINTS OF EXHAUST VOC CHEMICALS

Mass Concentration Ratio	**Chemical**	**Boiling Point (°C) [16]**
0.3048	MEK	80
0.1693	Isopropanol	82
0.1270	Ethyl Acetate	77.5
0.0931	n-Butylacetate	126
0.0846	2-Butoxyethanol	171
0.0626	Ethanol	78
0.0575	m,p-Xylene	140
0.0398	Toluene	111
0.0321	o-Xylene	145
0.0288	Ethylbenzene	136

It is important to note that this simulation desorption time used 160 °C saturated steam which is slightly above what is typically suggested based on benzene's boiling point and not at the exact steam inlet conditions for the steam regeneration system. The mass of benzene that was removed was 154 kg after 182 minutes. However, the simulation results concluded that desorption improves at higher temperatures and this in turn would reduce the actual time of desorption required [15]. Determining an exact desorption time involving all of the VOCs adsorbed in the carbon is a parameter that would require optimization for a

detailed design analysis which is out of the scope of this project. Therefore, it is assumed that the higher VOC mass desorbed from the system (260.19 kg in a 24 hour period) accompanied by a higher process temperature will have roughly the same desorption time presented in the simulation and a desorption time of 182 minutes will be used for the steam regeneration system.

The steam inlet flow velocity, v, is a property that would require optimization performed in a detailed design analysis. To maintain consistency with the study used to estimate the desorption time, the steam inlet flow velocity that will be used is 0.0113 m/s [15].

TABLE XIII. STEAM REGENERATION SIMULATION PARAMETERS

Steam Regeneration Simulation Parameters [15]	
Desorption Time, t_d $(minutes)$	182
Steam inlet Velocity, v (m/s)	0.0113

4.3.3 Volume of Wastewater Generated Per Cycle

Wastewater generated by the steam regeneration process refers to the collected condensate produced by steam exiting the vessel to the condenser which contains the VOCs previously contained in the activated carbon. To maintain continuity in the system, the wastewater generated by the system is directly proportional to the amount of steam required to pass through the carbon for VOC desorption. Using steam inlet velocity, the mass flow rate of steam, $\dot{m}_{steam}$, in kg/s is calculated using Equation 11. Here, A is the cross-sectional area the steam is passing through in m^2, v is the inlet speed of the steam in m/s, and ρ is the density of the steam. The mass flow rate will then be multiplied by the desorption time, t_d, of 307.5 minutes to obtain the mass of steam, m_{steam}, used in the regeneration process using Equation 12.

$$\dot{m}_{steam} = \rho v A \tag{11}$$

$$m_{steam} = 60 \ * \ \dot{m} t_d \tag{12}$$

The cross-section differs between horizontal and vertical vessels due to how the steam travels through the carbon. In a vertical vessel, steam passes through a circular cross-sectional area as shown in Fig. 12a. In a horizontal vessel, steam passes through a rectangular cross-sectional area as shown in Fig. 12b. For both vertical and horizontal vessels, the steam flow comes in from the opposite direction to the exhaust gas flow into the bed [20]. Fig. 12 shows one possible configuration.

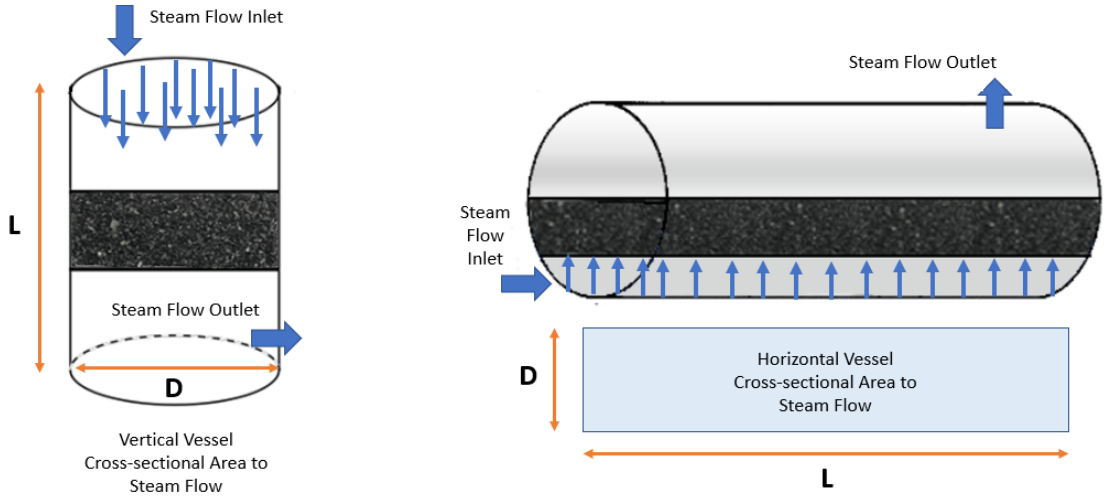

(a) Steam flow - vertical vessel.

(b) Steam flow - horizontal vessel.

Fig. 12. Steam flow for vertical and horizontal vessels.

For a given vessel size, $\dot{m}_{steam}$ and m_{steam} can be calculated as follows:

$$\dot{m}_{steam} = (8.00448)(0.0113)(7.72)$$
$$\dot{m}_{steam} = 0.69844\ kg/s$$
$$m_{steam} = 60\ *\ (0.69844)(182)$$
$$m_{steam} = 7,626.986\ kg$$

With the mass of steam required for the process known, the volume of condensate, V_c, in gal can be found. This is done by using the density of water at a desired storage temperature and substituting it into Equation 13. It is assumed that any change in density of the wastewater due to dissolved VOCs is negligible. The chosen storage temperature of the wastewater is 0 °C, where ρ_w is approximately 1 kg/L [21]. This temperature was selected because it is the melting point of water and the lowest temperature it can handle for outdoor storage of wastewater containers.

$$V_c = 0.264172\frac{m_{steam}}{\rho_w} \tag{13}$$

Using the m_{steam} calculated for a given vessel size earlier, V_c can be calculated as follows:

$$V_c = 0.264172\frac{(7,626.986)}{(1)}$$
$$V_c = 2,014.8\ gal$$

Table XIV shows a summary of the estimated quantities of wastewater produced per cycle for various vessels sizes.

TABLE XIV. WASTEWATER GENERATED FOR VARIOUS VESSEL SIZES

Vessel	L (ft)	D (ft)	A (m^2)	$\dot{m}_{steam}$ (kg/s)	m_{steam} (kg)	V_c (Gal)
Horizontal	19.98	4.16	7.72180	0.69844	7,626.986	2,014.8
	13.52	6.14	7.71214	0.69757	7,617.44	2,012.3
	6.5	12.77	7.11416	0.69750	7,616.73	2,012.1
Vertical	5.09	10.28	7.710917	0.69746	7,616.23	2,012.0
	5.61	10.28	7.710917	0.69746	7,616.23	2,012.0
	7.35	10.28	7.710917	0.69746	7,616.23	2,012.0

4.3.4 Wastewater Collection

To ensure the steam produced during regeneration is properly collected as liquid wastewater, a condenser is required to be connected from the wastewater outlet of the vessel. The condenser selection includes considerations of the functionality, occupied size, and unit cost. A Shell and tube condenser with a cylindrical shape manufactured from Shandong, China, was selected, weighing 35 kg [22]. The condenser works well as a cooling system and the appearance is shown in the Fig. 13.

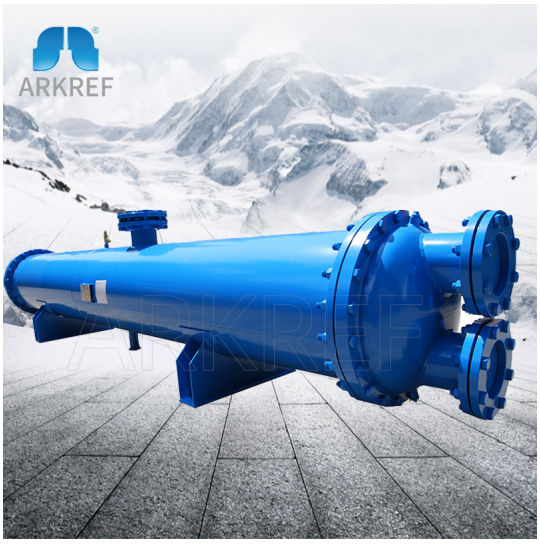

Fig. 13. Shell and tube condenser (public access) [22].

The wastewater produced from the steam regeneration process by the condenser contains a fairly high concentration of VOCs. For this reason it cannot be disposed of as regular industrial waste. A third party, United Chemicals, which is the paint supplier of Duha, regularly disposes of waste produced in other plant processes and will also dispose of the wastewater produced by steam regeneration.

4.3.5 Pressure Drop Due to Carbon in the Vessel

To maintain a steady-state condition of steam travelling throughout the vessel, there must be a sufficient amount of fluid body force acting behind the steam. Due to fictional forces induced by the steam flowing through the carbon granules, a pressure drop due to the carbon bed in the vessel is expected and must be verified to be negligible in each vessel configuration.

For incompressible flow in porous media, if the friction coefficient, f_p, of the media is known then the pressure drop in the system can be calculated using Equation 14. Here, L is the height of the carbon bed in ft, ρ is the density of the steam in kg/m^3, v is the inlet velocity of the steam in m/s, and D_p is the diameter of the carbon particle.

$$\Delta p = \frac{0.3048 * f_p L \rho v^2}{D_p} \tag{14}$$

There are many empirically derived equations for determining a frictional coefficient of a substrate. The Carman equation is selected due to its wide Reynolds number, Re, range as shown in Equation 15 [23]. In this empirical correlation ϵ is the porosity of the activated carbon used.

$$f_p = \left((180 + 2.871\left(\frac{Re}{1-\epsilon}\right)^{0.9}\right)\frac{(1-\epsilon)^2}{\epsilon^3 Re},\ 0.01 < Re < 10,000 \tag{15}$$

The Reynolds number in this equation is calculated according to the largest particle diameter, D_p, shown in Equation 16 [23]. It also takes into account the steam properties listed in Table XIII, steam velocity, v, for different vessel sizes, ρ is density in kg/m^3, v is velocity in m/s, D_p is the diameter of the carbon particle in m, and μ is fluid viscosity in Ns/m^2.

$$Re = \frac{\rho v D_p}{\mu} \tag{16}$$

The exact values required such as particle diameter or porosity are considered proprietary by PSFilter. However, the grain size of 6 mm used to run the simulation for desorption time will be used for consistency [15]. The carbon particles are assumed to be homogeneous and spherical for analysis.

The carbon particle properties and resulting Reynolds number are summarized in Table XV.

TABLE XV. CARBON PARTICLE PROPERTIES FOR ESTIMATION

Porosity	**Particle Size** (mm)	**Re**
0.5 [15]	6 [15]	2.136

Knowing the particle size, the constant Reynolds number for a vessel can be calculated as follows:

$$Re = \frac{(8.00448)(0.0113)(0.006)}{(15.676E-5)}$$

$$Re = 3.462$$

Using Equation 15 and Equation 14, the resulting friction coefficient and pressure drop for a given vessel size is calculated as follows:

$$f_p = \left((180 + 2.871\left(\frac{(2.136)}{1-(0.5)}\right)^{0.9}\right)\frac{(1-(0.55))^2}{(0.5)^3(2.136)}$$

$$f_p = 189.932$$

$$\Delta p = \frac{0.3048 * (189.932)(2.4)(8.00448)(0.0113)^2}{(0.006)}$$

$$\Delta p = 23.67\ Pa$$

The pressure drops of various vessel sizes are summarized in Table XVI.

TABLE XVI. PRESSURE DROP IN VARIOUS VESSELS

	L (ft)	**D**(ft)	$\mathbf{t_b}$**(ft)**	**Pressure Drop** (Pa)
Horizontal	14	16813.86	2.4	23.67
	30	16793.58	3.55	35.01
	60	16792.01	7.38	72.78
Vertical	14	16790.91	1.09	10.75
	30	16790.91	1.61	15.88
	60	16790.91	3.35	33.04

4.3.6 Carbon Drying Time

When the steam regeneration process is complete, the activated carbon inside the regenerating vessel is purified of VOCs. However, because of the long contact time with steam, internal condensation occurs and the activated carbon is left moist [15]. Even though the activated carbon is not sensitive to moisture, as the adsorbent used for filtering the air, it should stay dry to maintain the highest capacity for filtering organic contaminants[24]. Specifically, the presence of water can handicap the intended function of the activated carbon by making the carbon pores unavailable for VOC adsorption [25]. To remove any remaining water from the carbon post-steam regeneration, a drying process is necessary. The saturated activated carbon can be dried using dry air with temperature ranging from 200 - 250°F [24].

To set up a proper process for drying the desired amount of carbon in the vessel, a suitable temperature, air flow rate, as well as a drying time are required to determine the quantity of dry air required to dry a carbon bed completely.

One study examined a method of determining the drying efficiency of granular activated carbon with the mass of 680 g in a thermally insulated, cylindrical tank. The dry air passing through the tube from top to bottom has a speed of 2 m/s and a temperature of 373 K, (211.73 °F). The experiment stops once the air outlet reaches the same temperature as the inlet because zero temperature drop represents the closure of water evaporation inside the carbon. The time required for each of the six layer of carbon to dry is shown in Fig. 14.

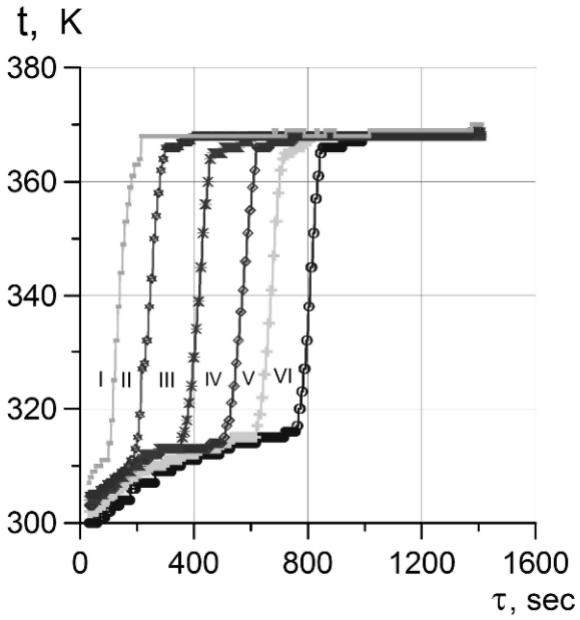

Fig. 14. Activated carbon drying experiment (public access) [26].

Based on Fig. 14, after around 1000 s, the entire tank of carbon has been dried. To proceed the calculation for estimating the drying efficiency, the air flow rate in the experiment should be firstly determined using Equation 17 where Q_{exp} is the air flow rate in the experiment in m^3/s, D is the diameter of the cylindrical container in m and V_{exp} is the air speed in m/s used in the experiment. Converting the mass of carbon, 640 g, from the experiment into lbs which yields a carbon mass, m_{exp}, of 1.411 lbs, the time used for the drying process, T_{exp}, is 1000 s.

$$\begin{aligned} Q_{exp} &= \frac{\pi}{4} D^2 V_{exp} \\ Q_{exp} &= \frac{\pi}{4}(0.1) \\ Q_{exp} &= 0.015708 \ m^3/s \end{aligned} \tag{17}$$

The efficiency of drying the carbon with hot air at 211.73 °F is evaluated in Equation 18.

$$\begin{aligned} E_{exp} &= \frac{T_{exp} Q_{exp}}{M_{exp}} \\ E_{exp} &= \frac{(1000)(0.015708)}{(1.411)} \\ E_{exp} &= \ 11.132 \ m^3/lb \end{aligned} \tag{18}$$

This efficiency represents the amount of cubic meters of dry air required to dry out each pound of carbon completely under the temperature of 211.73 °F. This efficiency can be carried into the estimation of the drying time of the designed vessel if the dry air source is set at a specific temperature similar to the condition as in the experiment.

To locate a suitable hot air source at around 210 °F, the best option is to use the target exhaust stack which has the temperature of around 220 °F, which is similar to the temperature in the experiment. Therefore, using the exhaust gas as the dry air source to dry the wet carbon is feasible. The drying time can be calculated using Equation 19.

$$T = \frac{E_{exp} m}{Q} \tag{19}$$

The air flow rate from the exhaust, Q, is 2.55 m^3/s according to Table IV, and the mass of activated carbon required per day is in Table VII found in Section 4.1. Taking the 30-day cycle as an example for calculation,

$$T = \frac{(11.132)(4017)}{(2.55)(60)} = 292.27\ min$$

Hence, the required drying time corresponding to all the operation cycle is illustrated in the table XVII.

TABLE XVII. CARBON DRYING TIME

Operation Cycle (*days*)	**14 Day Cycle**	**30 Day Cycle**	**60 Day Cycle**
Weight of Carbon in One Vessel (*lbs*)	2719	4017	8352
Drying Time (*min*)	197.83	292.27	607.68
Drying Time (*hr*)	3.30	4.87	10.13

4.3.7 Other Considerations for Design Optimization

While the analysis for the steam regeneration system provides information on key parameters used in estimating the operating costs of such a system, some parameters would need to be empirically verified for detailed design optimization due to simulation limitations in accurately accounting for heat transfer for any phase change occurring in the steam during desorption [15]. These parameters include the desorption time required and steam inlet flow speed to minimize steam consumption for a given steam temperature in a selected vessel. Because the temperature of desorption is critical for determining desorption kinetics, the time required for the vessel to heat up to the process temperature would add additional desorption time during operations occurring in the winter time and would be a factor in insulation design [20].

Another factor to consider is the effects inlet steam flow has on vibration generated within the vessel. Ideally, flow should be laminar to minimize vibration in the vessel. The Reynolds number threshold for laminar to turbulent flow are different in porous media than in an open tube. These generally accepted ranges are listed below [27]:

- Laminar, Re $<$ 1
- Laminar and turbulent, 1 $\leq$ Re $\leq$ 100
- Laminar and turbulent, 100 $<$ Re

5 Economic Analysis

The economic analysis involves a comprehensive assessment consisting of the BOM and operating costs of the VOC reduction system. All prices listed are in Canadian dollars unless otherwise stated.

5.1 Total Adsorber Equipment Cost

To determine the total adsorber equipment cost, the vessel cost must first be assessed. The vessels would be made using 304 stainless steel as that is the most common material for fabricating adsorber vessels. Equation 20 provides an estimate to the cost, C_v, of the vessel using the surface area, S, in ft^2 of the vessel and the type of material used. This equation takes into account both the material cost as well as any other design factors such as parts to be created, the exhaust velocity used, insulation, ducting, and support for the vessel. The cost per vessel is summarized in Table XVIII.

$$C_v = 271S^{0.778} \tag{20}$$

$$C_v = 271(330.64)^{0.778} = \$24,718.82$$

TABLE XVIII. VESSEL COST

Vertically Aligned		
Operation Days (*days*)	**Vessel Surface Area (ft^2)**	**Individual Vessel Cost ($)**
14	330.64	24,718.82
30	347.48	25,692.87
60	403.67	28,870.74
Horizontally Aligned		
Operation Days (*days*)	**Vessel Surface Area (ft^2)**	**Individual Vessel Cost ($)**
14	288.00	22,201.21
30	320.10	24,103.58
60	516.90	34,994.48

The cost of carbon can be calculated using Equation 21 where C_c is the total carbon cost, CC is the cost per pound of carbon which (REDACTED) and M_c is the total carbon required.

$$C_c = CC(M_c) \tag{21}$$

$$C_c = 1.90(5438) = \$10,332.20$$

TABLE XIX. CARBON COST

Vertically and Horizontally Aligned		
Operation Days (*days*)	**Total Carbon Required (*lbs*)**	**Total Carbon Cost ($)**
14	5438	10,332.20
30	8034	15,264.40
60	16704	31,737.60

An estimate of any required fans, pumps, condenser, instrumentation, and internal piping can be factored into the total cost using Equation 22 and Equation 23 where Q is the volume flow rate of 5,403 cfm for all cases, R_c is the adsorber equipment cost factor, C_a is the total adsorber unit cost, C_c is the total carbon cost for one operation cycle, and C_v is the vessel cost which is multiplied by two since two vessels are required. The containers required for load transfer, priced at $ 7.67 per unit, will also be added to the total adsorber cost (one set for loading and one set for unloading) [11].

$$R_c = 5.82Q^{-0.133} \tag{22}$$

$$C_a = R_c[C_c + C_v(2)] \tag{23}$$

$$R_c = 5.82(5403)^{-0.133} = 1.856$$

$$C_a = 1.856[10,332.20 + 24,718.82(2)] \ + \ 7.67(4) = \$110,963.51$$

The cost for all operation cycles are summarized in Table XX.

TABLE XX. TOTAL ADSORBER COST

Vertically Aligned		
Operation Days (*days*)	**Additional Equipment Factor**	**Total Adsorber Equipment Cost ($)**
14	1.856	110,963.51
30	1.856	123,733.73
60	1.856	166,134.53
Horizontally Aligned		
Operation Days (*days*)	**Additional Equipment Factor**	**Total Adsorber Equipment Cost ($)**
14	1.856	101,587.46
30	1.856	117,803.59
60	1.856	188,804.50

5.2 Steam Regeneration Equipment Cost

Key equipment components of the steam regeneration system include the boiler, condenser, and instrumentation. Instrumentation components include breakthrough concentration sensors but exclude any associated micro-controllers and solenoid valves. Costs summarized in Table XXI represent the BOM for the steam regeneration system. Excluded are material costs associated with plumbing such as pipes, joints, and installation.

TABLE XXI. STEAM REGENERATION BOM

Item	**Qty**	**Unit Price ($)**
Boiler	1	64,372.35 [17]
Condenser	1	1,931.18 [22]
Toulene VOC sensor	2	1.73 [28]

5.3 Yearly Upkeep Costs

This section will cover yearly upkeep costs of the design including, carbon replacement costs, carbon disposal costs, steam costs and water disposal costs.

5.3.1 Carbon Costs

For activated carbon, two yearly upkeep costs must be considered: carbon replacement and carbon disposal. At the end of an operation cycle, carbon replacement is required. For the 14 day operation cycle there will be two separate replacement costs. One for the refill after the first 14 days and the second for full replacement after the second 14 day cycle. For all three cycle options, a total of 7,072 hrs/year of operation time will be used to match yearly Duha's operating time. Using a 24 hour work day, this equates to approximately 295 operation days a year. This leads to a total amount of carbon replacements summarized in Table XXII. All values for amount of carbon replacements are rounded up to simplify further calculations.

TABLE XXII. AMOUNT OF CARBON REPLACEMENTS

Operation Days (*days*)	**Total Days of Operation** (*days*)	**Number of Carbon Replacements**
14	295	22
30	295	10
60	295	5

For all carbon replacements, the carbon will have to be replaced up to the values listed in Table VII found in Section 4.1. For the 14 days of operation after the first cycle the carbon remaining will be at 2,029 lbs and will need to be refilled to 2,719 lbs in both vessels. (REDACTED)

TABLE XXIII. YEARLY CARBON REQUIREMENTS

Operation Days	**Carbon Requirements** (*lbs*)	**Number of Carbon Replacements**	**Carbon Cost per year** ($/*year*)
14 (first cycle)	1,380	11	28,842.00
14 (second cycle)	5,438	11	113,654.20
30	8,034	10	152,646.00
60	16,704	5	158,688.00

The second carbon upkeep cost to assess is carbon disposal. At the end of all operation cycles, the carbon will be reduced to approximately 2,029 lbs of carbon remaining that will likely contain some remnants of VOCs present which would classify it as hazardous waste. It is estimated that the cost of disposing of this carbon is approximately half the carbon price, making it $0.95/lb of carbon. (REDACTED)

TABLE XXIV. CARBON DISPOSAL COSTS

Operation Days	**Number of Carbon Replacements**	**Amount of Carbon Disposed** (*lbs*)	**Yearly Disposal Cost** ($/*year*)
14	11	4,058	42,406.10
30	10	4,058	38,551.00
60	5	4,058	19,274.25

5.3.2 Steam and Wastewater Disposal Costs

To determine the cost of steam required, a value of $5 per 1,000 lbs of steam will be used as an estimate along with the m_{steam} values listed in Table XIV (converted to lbs) and 295 days of operation per year. The total yearly cost of steam can be seen in Table XXV.

TABLE XXV. YEARLY STEAM COST

	Operation Days	Steam Mass Per Day (lbs)	Steam Cost Per Year
Vertical	14	16,813.86	24,800.44
	30	16,793.58	24,770.53
	60	16,792.01	24,768.21
Horizontal	14	16,790.91	24,766.59
	30	16,790.91	24,766.59
	60	16,790.91	24,766.59

Once steam regeneration is completed, the steam that was condensed into water requires disposal. Duha Color Services has current processes in place to dispose of wastewater generated in other areas of the factory that can be similarly used to dispose of steam regeneration wastewater. (REDACTED). The total amount of water created as well as the cost per year of water disposal can be seen in Table XXVI.

TABLE XXVI. YEARLY WATER DISPOSAL COST

	Operation Days	Volume of Water Per Day (Gal/day)	Disposal Cost Per Day ($\$/day$)	Disposal Cost Per Year ($\$/year$)
Vertical	14	2,014.84	9,341.531	2,755,752
	30	2,021.32	9,371.575	2,764,614
	60	2,012.13	9,328.966	2,752,045
Horizontal	14	2,012.00	9,328.364	2,751,867
	30	2,012.00	9,328.364	2,751,867
	60	2,012.00	9,328.364	2,751,867

5.4 Total Cost BOM

Using the values calculated, a total capital cost and yearly upkeep cost can be determined. The total capital cost, as seen in Table XXVII, incorporates the vessel price which includes fans, pumps, condensers, instrumentation, and piping as well as the price for a saturated steam boiler and condenser. The total cost calculated is an estimate of what the system will cost. A more detailed design will provide a more accurate cost. The upfront cost does not include any costs associated with an initial set-up of the vessel as that would require a more detailed design and discussion with contractors. The total capital cost listed can be lowered through Government Incentives that will be discussed in Section 5.5.

TABLE XXVII. TOTAL CAPITAL COST

	Operation Days	Adsorber Cost (CAD)	Steam Regeneration Cost (CAD)	Total (CAD)
Vertical	14	110,932.83	66,306.99	177,239.82
	30	123,703.05	66,306.99	190,010.04
	60	166,073.17	66,306.99	232,380.16
Horizontal	14	101,587.46	66,306.99	167,894.45
	30	117,803.59	66,306.99	184,110.58
	60	188,804.50	66,306.99	255,111.49

Using the values calculated, a yearly upkeep can be determined as seen in Table XXVIII. These values incorporate the costs for carbon replacement, carbon disposal, steam and water disposal. These values are an estimate of the yearly upkeep and some actions can be taken to lower the overall cost. Firstly, the water disposal is a significant portion of the cost and therefore using a decanter to reduce contaminated water or using less steam overall can significantly reduce the cost. Secondly, the steam requirements calculated may be greater than the amount of steam necessary and therefore by reducing the steam requirements both the steam upkeep and water disposal upkeep costs will be reduced. Thirdly, a reduction in carbon usage or amount of carbon replacements would reduce the carbon upkeep costs and the carbon disposal costs. The yearly upkeep cost does not incorporate electricity cost associated with vessel components, labor cost associated with upkeep and operation of the system, and any inflation that could occur through years of operation.

TABLE XXVIII. TOTAL YEARLY UPKEEP

	Operation Days	**Carbon Costs** ($/year)	**Carbon Disposal Costs** ($/year)	**Steam Cost** ($/year)	**Water Disposal Cost** ($/year)	**Total** ($/year)
Vertical	14	142,496.20	42,606.10	24,800.44	2,755,752	2,965,654.74
	30	152,646.00	38,551.00	24,770.53	2,764,614	2,980,581.53
	60	158,888.00	19,275.50	24,768.21	2,752,045	2,954,776.71
Horizontal	14	142,496.20	42,606.10	24,766.59	2,751,867	2,961,735.89
	30	152,646.00	38,551.00	24,766.59	2,751,867	2,967,830.59
	60	158,888.00	19,275.50	24,766.59	2,751,867	2,954,597.09

The BOM for the carbon adsorber system is shown in Table XXIX. Costs indicated with a dash are already factored into the total adsorber and carbon costs through calculations performed earlier. This BOM outlines a majority of the key features that will be required for system implementations.

TABLE XXIX. BILL OF MATERIALS

Part	**Description**	**Quantity**	**Unit Cost ($)**	**Total Cost ($)**
Initial Carbon	The amount of carbon for one vessel	2	14,165.36	28,330.73
Adsorber Vessel	10.28 ft diameter x 5.61 ft length x 1.06 in thickness, stainless steel cylinder	2	47,685.97	95,371.93
Boiler	Steam regeneration boiler	1	64,372	64,372.35
Condenser	Steam to water condenser	1	1,932.18	1,932.18
Piping	Piping for steam and exhaust gases	-	-	-
Solenoid Valves	Valves for steam and exhaust gases	8	-	-
VOC Concentration Sensor	VOC detection sensors	2	1.73	3.46
Control system	Controls instrumentation used in processes	1	-	-
Fans	Controls steam and exhaust gas airflow	-	-	-
Insulation	Maintains constant system temperature	-	-	-
Carbon Containers	Woven material to hold unused carbon	4	7.67	30.68
Pumps	Pumps water from condenser	-	-	-
	Total	21	-	190,010.04

5.5 Government Environmental Incentives

As the project is involved with emission reductions in a manufacturing environment, there is great potential for receiving government monetary assistance. The sources that were researched for funding included: Mentor Works, Manitoba Government Grants, Government of Canada Business Benefits Finder, Scientific Research and Experimental Development Tax Incentive Program and Sustainable Technology Development Canada. From these sources, funding that would applicable for the project was identified in Table XXX. Furthermore, the eligibility requirements, eligible costs covered by the funds, the fund amount and the application requirements is summarized as well [29] [30] [31].

TABLE XXX. POTENTIAL PROJECT FUNDING MATRIX

Fund/Grant Name	**Eligibility Requirements**	**Eligible Funding Costs**	**Funding Amount**	**Application Requirements**
Sustainable Development Technology Canada	1. A Canadian company with a defined project. 2. A strong end-user value proposition. 3. The potential to attract a consortia partner to validate the market need. 4. Demonstrated environmental and economic benefits for Canadians.	Supplies and equipment including installation, professional, scientific, technical and contractual services costs, utilities, waste removal, and consumables.	On average 33% (up to 40%) of eligible projects costs.	1. Application 2. Presentation 3. Proposal
Conservation and Climate Fund	1. Fit within one or more of the three Categories of the Fund. For this project the best category would be Climate and Green Technology. 2. Fit within one or more of the eleven Sub-Categories of the Fund. For this project the best subcategory would be Sector Emissions Reductions.	Any costs directly related to developing and executing of the project are eligible, excluding some identified as ineligible costs.	The maximum grant per applicant, as determined by the Fund, over a fiscal year is $200,000.	Application Form of the Conservation and Climate Fund
SR&ED Tax Credit	1. The work is conducted to gain new knowledge that helps to achieve your objectives or resolve a problem. 2. The work is a systematic investigation or search that is carried out in a field of science or technology by means of experiment or analysis.	The allowable expenditures claimable may include expenditures for: Salary or wages, materials, contracts for SR&ED, overhead and third-party payments.	Based on yearly tax assessment.	1. Income Tax Return 2. Form T661 3. Schedule T2SCH31, Investment Tax Credit

6 Risk Analysis

For this project, a risk analysis was conducted in order to keep track of any events that have the possibility to pose a risk to the project. The project scope, timeline, budget, and task were all evaluated in order to identify risks. All of the identified risks were then categorized using a systematic ranking system which relies on the probability of the risk materializing, as well as the potential impact that the risk would have on the project. These criteria were then multiplied against each other to provide a final score. Table XXXI lists the identified risks. This table and all risk register tables were derived from the Project Management course [32].

TABLE XXXI. RISK REGISTER - RISK IDENTIFICATION

Risk Number	Risk Author	Date Registered	Risk Category	Risk Description
1	O.S	2021-11-27	Services Interruption	Pipes\wastewater freezing at low temperature
2	O.S	2021-11-27	Services Interruption	Forgetting to replace carbon
3	O.S	2021-11-27	Services Interruption	Unable to position equipment on roof
4	O.S	2021-11-27	Quality	VOC emission does not reach 95% reduction
5	O.S	2021-11-27	Budget	The system requires a large electrical input
6	P.Z	2021-12-05	Service Interruption	Waste management company cannot pick up wastewater containers
7	A.C	2021-12-05	Service Interruption	Carbon shipment delays creating a shortage during replacement days
8	A.C	2021-12-05	Quality	Steam regeneration causes a greater than 5% mass reduction

The risk likelihood was divided into five criteria between 0 and 100 %. The scoring from the probability is scored from one to five, where the scores are described as follows:

1. Extremely Rare - Event may occur only in exceptional circumstances: $<5\%$ chance of occurrence
2. Rare - Event could occur at some time: 5-25% chance of occurrence.
3. Unlikely - Event might occur at some time: 25-50% chance of occurrence
4. Likely - Event will probably occur in most circumstances: 50-95% chance of occurrence.
5. Almost Certain - Event is expected to occur in most circumstances: $>95\%$ chance of occurrence

The scoring for the impact is scored from one to five as well. The scores are described as follows:

1. Insignificant - Event will not have a measurable impact on project scope, schedule, and/or cost.
2. Minor - Event may have minor impacts on project scope, schedule, and/or cost, but remain within the threshold stated in the project plan.
3. Moderate - Event will moderately affect project scope, schedule, and/or cost. Key stakeholders may need to be contacted.
4. Major - Event will have a major affect on project scope, schedule, and/or cost. There is a need to engage key stakeholders before continuing with project work.

5. Extreme - Event will have an extreme impact on the project scope, schedule, and/or cost and may prohibit the project from proceeding. Key stakeholders must be engaged immediately.

Using this scoring criteria, a probability and impact was given for each risk and a final risk rating was obtained. This risk rating presents which risks should be prioritized. The risk scoring is shown in Table XXXII.

TABLE XXXII. RISK REGISTER - QUALITATIVE RISK ASSESSMENT

Risk Number	Probability	Impact	Total Risk Rating
1	4	5	20
2	2	5	10
3	2	4	8
4	3	3	9
5	3	3	9
6	2	4	8
7	2	4	8
8	3	3	9

After all of the risks were scored, a risk response was developed in order to either mitigate, transfer or avoid the risk. The risk response plan is shown in Table XXXIII.

TABLE XXXIII. RISK REGISTER - RISK RESPONSE STRATEGY

Risk Number	Risk Response Category	Risk Response
1	Mitigate	Use insulation to prevent freezing
2	Mitigate	Have a strict replacement schedule
3	Mitigate	Receiving exact equipment installation drawings from supplier
4	Mitigate	Adding more carbon until capacity is reached
5	Mitigate	Having switch to only run the system when the heating tunnel is in use
6	Transfer	Make adhering to schedules a contract item
7	Mitigate	Store additional carbon to ensure replacement is always possible
8	Transfer	Have a contractor test and ensure the steam regeneration losses

7 Conclusion & Recommendations

A VOC reduction system has been developed for Duha Color Group that best satisfies the project requirements stated in Section 1.3. A vertical vessel with a 30 day operation cycle was chosen as it was the best fit solution. The VOC reduction system uses two parallel vertical vessels connected in alternating order to the target exhaust. Each vessel is filled with an activated carbon bed that acts as a VOC filtering agent. Vessels work on rotating 24-hour shifts operated by a series of control valves connecting each vessel with a exhaust, steam, and wastewater line. Once a sensor detects breakthrough concentration on the adsorbing vessel, it proceeds to initiate the steam regeneration sequence. In the steam regeneration process, a boiler generates high temperature saturated steam flow at 201°C that runs through the carbon bed to desorb the chemicals from the carbon. The desorbed chemicals in the steam flow are routed to a condenser and collected as wastewater into a barrel to be disposed of by United Chemicals. Once regeneration is complete, the regenerated carbon bed completes a drying cycle using hot exhaust air and the vessel is put on stand by, ready to begin the next filtration cycle. All stated processes would be initiated automatically using system controls, with system maintenance being the only human input (ie. carbon removal/addition, inspection). A summary of the final design parameters can be seen in Table XXXIV.

TABLE XXXIV. FINAL DESIGN SUMMARY

Parameter	**Value**
Individual Vessel Diameter (ft)	10.28
Individual Vessel Length (ft)	5.61
Individual Vessel Thickness (in)	1.03
Total Equipment Cost ($CAD\$$)	190,010.04
Yearly Upkeep Cost ($CAD\$$)	2,980,581.53
Yearly VOCs Removed (lbs)	169,027.87
Wastewater Volume (gal/day)	2012
Regeneration Time (min)	182
Drying Time (min)	292
Maintenance Cycle ($days$)	30
Required Carbon Weight (lbs)	4,017
Total System Mass (lbs)	8,502

Steam regeneration values such as desorption time could be improved for a given vessel with more empirical data as there is not a lot of research examining its effectiveness at desorbing a mixture of VOCs in the carbon bed [15]. By reducing the adsorption time the upkeep cost of steam and water disposal could be drastically reduced. It is important to note that each cycle of steam regeneration causes approximately 5% loss in weight of activated carbon. However, a higher or lower loss is possible in reality, which results in a different lifespan of the carbon and thus a different maintenance period. Currently the life cycle of carbon is set for full replacement every 30 days, but if a longer life cycle is adopted, then less carbon shall be required for upkeep, which is more economical.

Additionally, the analysis of the VOC emission reduction system proposed to use granular activated carbon, which presents a 1/3 absorption rate of its own weight. However, the ability of adsorption depends on the intrinsic properties of the carbon used. Other types of activated carbon could offer better performance for VOC emission reduction at a higher cost, such as impregnated activated carbon [33]. Finally, a strict requirement Duha stated for this project is to not use any process involving thermal oxidation to eliminate the VOC emissions due to its high temperature and the risk of explosion. However, combustion is the most effective and economical way of eliminating most of the organic compounds, turning them into carbon dioxide and water. The potential hazards can be researched and avoided by an engineering design team.

8 References

[1] Dictionary.com. "Definitions." (2021), [Online]. Available: dictionary.com (visited on 11/29/2021).

[2] J. L. Sorrels. "Carbon adsorbers." (2018), [Online]. Available: https://www.epa.gov/sites/default/files/2018-10/documents/final_carbonadsorberschapter_7thedition.pdf (visited on 10/22/2021).

[3] Carbon Activated Corp. "Impregnated activated carbon." (2020), [Online]. Available: https://activatedcarbon.com/products/impregnated-activated-carbon (visited on 10/22/2021).

[4] Duha Group. "Members of the Duha Group." (2021), [Online]. Available: https://www.duhagroup.com/pages/locations-partners (visited on 09/30/2021).

[5] K. Ki-Joong *et al*, "Adsorption–desorption characteristics of vocs over impregnated activated carbons," *Catalysis Today*, vol. 111, no. 3, pp. 223–228, Available: https://www.sciencedirect.com/science/article/abs/pii/S0920586105007820?via[November 22 2021], ISSN: 0920-5861.

[6] ScienceDirect. "Adsorption." (2021), [Online]. Available: https://www.sciencedirect.com/topics/earth-and-planetary-sciences/adsorption (visited on 10/22/2021).

[7] N. Richards. "How to use activated carbon to remove vocs from polluted air," PS Filter. (2018), [Online]. Available: https://www.psfilter.com/filtration-equipment-blog/how-to-use-activated-carbon-to-remove-vocs-from-polluted-air/ (visited on 10/22/2021).

[8] C. Carlson,A. Ebbenis. (2010), [Online]. Available: https://feeco.com/a-look-at-activated-carbon-thermal-regeneration/ (visited on 10/23/2021).

[9] Sentry Air System Inc. "Activated carbon adsorption index chart." (2010), [Online]. Available: https://www.sentryair.com/activated-carbon-adsorption.htm (visited on 10/23/2021).

[10] U.S. Army Corps of Engineers, "Adsorption design guide," 2001, [Online]. Available: https://www.publications.usace.army.mil/Portals/76/Publications/EngineerDesignGuides/$DG_1110 - 1 - 2.pdf?ver = 2013 - 08 - 16 - 101110 - 540$. (visited on 11/29/2021).

[11] Alibaba.com. "factory price pp woven 1mt Jumbo bag big bag for 1 ton fabric bag." (2021), [Online]. Available: https://www.alibaba.com/product-detail/factory-price-pp-woven-1mt-Jumbo_1985699346.html?spm=a2700.themePage.1019058676167.39.68bd233dRljYVl (visited on 11/26/2021).

[12] C. Logan, private communication, 2021.

[13] Ranjan. "Minimum design wall thickness of thin/thick cylindrical shells,for longitudinal welds(circumferential stress)-asme standards." (2017), [Online]. Available: https://mathtab.com/app_id=3815 (visited on 12/06/2021).

[14] Azo Materials. "Stainless steel - grade 304 (uns s30400)." (2021), [Online]. Available: https://www.azom.com/properties.aspx?ArticleID=965 (visited on 11/28/2021).

[15] A. Jareteg, D. Maggiolo, H. Thunman, S. Sasic, and H. Ström, "Investigation of Steam Regeneration Strategies for Industrial-Scale Temperature-Swing Adsorption of Benzene on Activated Carbon," *Chemical Engineering and Processing - Process Intensification*, vol. 167, p. 108 546, 2021, [Online]. Avaliable: https://www.sciencedirect.com/science/article/pii/S0255270121002373.

[16] Chemical Book. "Chemical properties." (2021), [Online]. Available: https://www.chemicalbook.com (visited on 10/25/2021).

[17] Alibaba.com. "Natural gas, LPG, Light oil, Heavy oil Biogas steam boiler." (2021), [Online]. Available: https://www.alibaba.com/product-detail/Natural-gas-LPG-Light-oil-Heavy_60745275088.html?spm=a2700.galleryofferlist.normal_offer.d_title.4cf3591eJmTsKF (visited on 12/05/2021).

[18] C. Borgnakke and R.E. Sonntag, *Fundamentals of Thermodynamics*. John Wiley Sons, 2013, ISBN: 978-1-118-13199-2.

[19] T.L. Bergman, A.S. Lavine, F.P. Incropera, and D.P. Dewitt, *Fundamentals of Heat and Mass Transfer*. John Wiley Sons, 2019, ISBN: 978-1-119-65167-3.

[20] B. Crittenden, and W.J. Thomas, *Adsorption Technology and Design*. Oxford : Butterworth-Heinemann, 1998.

[21] C. Sarikas. "What Is the Density of Water? By Temperature and Unit." (2021), [Online]. Available: {https://blog.prepscholar.com/what-is-the-density-of-water} (visited on 12/05/2021).

[22] Alibaba. "Shell And Tube Water-Cooled Condenser For Cooling Unit." (2021), [Online]. Available: https://www.alibaba.com/product-detail/Condenser-Condenser-Shell-And-Tube-Water_1600386135514.html?spm=a2700.7735675.normal_offer.d_image.5ad27b11e1QSgn&s=p.

[23] A.M. Norouzi1, M. Siavashi1, A. Etebari1, and M. Khaliji Oskouei, "Experimental Estimation Of Axial–Vertical Flow Permeability Through A Packed Bed Of Granular Activated Carbon," *Journal of Thermal Analysis and Calorimetry*, vol. 141, no. 5, 1493–1508, 2020, [Online]. Avaliable: https://link-springer-com.uml.idm.oclc.org/article/10.1007/s10973-020-09918-y.

[24] K.E. Schaeffer. "The care and handling of activated carbon." (2005), [Online]. Available: {https://wcponline.com/2005/06/22/care-handling-activated-carbon/} (visited on 11/27/2021).

[25] J.K. Brennan, K.T.Thomson, and K.E. Gubbins, "Adsorption of Water in Activated Carbons: Effects of Pore Blocking and Connectivity," *Langmuir*, vol. 18, no. 14, p. 5438, 2002, [Online]. Avaliable: https://engineering.purdue.edu/ thomsonk/papers/KTT8.pdf.

[26] V. Atamanyuk, I. Huzova, and Z. Gnativ, "Intensification of Drying Process During Activated Carbon Regeneration," *Chemistry Chemical Technology*, vol. 12, no. 2, pp. 263–271, 2018, [Online]. Avaliable: http://science2016.lp.edu.ua/chcht/intensification-drying-process-during-activated-carbon-regeneration.

[27] University of Florida - Department of Chemistry. "Fluid Flow in Packed Beds." (2021), [Online]. Available: https://cao.chem.ufl.edu/wp-content/uploads/sites/22/2015/01/Lecture13-2015.pdf (visited on 2015).

[28] Alibaba.com. "I2C TVOC digital Toluene VOC sensor for Air quality detector." (2021), [Online]. Available: https://www.alibaba.com/product-detail/I2C-TVOC-digital-Toluene-VOC-sensor_1600291491945.html (visited on 12/05/2021).

[29] Sustainable Development Technology Canada. "Clean tech fund." (2021), [Online]. Available: https://www.sdtc.ca/en/cleantech-fund/ (visited on 11/27/2021).

[30] Government of Canada. "Scientific research and experimental development tax incentive – overview." (2021), [Online]. Available: https://www.canada.ca/en/revenue-agency/services/scientific-research-experimental-development-tax-incentive-program/overview.html (visited on 11/27/2021).

[31] Government of Manitoba. "Fund guide." (2021), [Online]. Available: https://www.gov.mb.ca/grants/pdf/ccf-fund-guide.pdf (visited on 11/27/2021).

[32] K. Atamanchuk, *Project management*, Last accessed 31 December 2020, 2020. [Online]. Available: https://universityofmanitoba.desire2learn.com/d2l/home.

[33] K-D. Henning and S. Schäfer, "Impregnated activated carbon for environmental protection," *Gas separation purification*, vol. 7, no. 4, 1493–1508, 1993, [Online]. Avaliable: https://www.sciencedirect.com/science/article/abs/pii/095042149380023P.

Appendix A Exhaust Stack VOC Testing

WINNIPEG Air Testing

Practical Health and Safety Solutions

5 Donwood Drive, Winnipeg, MB R2G 0V9
Phone: (204) 668-3141
Email: contact@winnipegairtesting.com

Duha Color Services
750 Bradford Street
Winnipeg, MB R3H 0N3
Midhun Babu
mbabu@duhagroup.com

October 7, 2021

Project Number: 5246

Exhaust Stack VOC Testing

Dear Client,

Please find below the results of the exhaust stack volatile organic compound (VOC) survey performed for Duha Color Services located at 750 Bradford Street in Winnipeg, MB on October 1st, 2021. Testing was performed to measure the airborne level of VOCs being exhausted from a rooftop exhaust vent as a metric of emissions from the industrial processes performed.

Methodology

The sample was collected from a rooftop exhaust vent by drawing air through a thermal desorption sampling tube using a Casella Apex2 industrial hygiene sampling pump. A 0.375" copper tube was placed in the air stream of the exhaust vent and connected to the thermal desorption sample tube to cool down the air before it reached the sample tube.



Right. Sampling equipment set up to collect air coming out of the exhaust vent.

The sample pump was calibrated to a flowrate of 0.2 litres per minute (lpm) both before and after the test using a Bios Defender DryCal calibrator to ensure a known flowrate during the sampling period. The sample was collected over a 5-period between 2:30 and 2:40 PM while air was being exhausted from the vent.

The sample was then analyzed using Gas Chromatography / Mass Spectrometry. The laboratory used to analyze the sample is accredited by the AIHA Laboratory Accreditation Program (AIHA-LAP), LLC in the Industrial Hygiene accreditation program for GC/MS Field of Testing as documented by the Scope of Accreditation Certificate. The analysis used references methods EPA TO-17 and ISO 16000-6, which fall within the lab's Scope of Accreditation.

Note: The "Total VOCs" Value listed is incorrect however the one listed in Table III of the report is correct.

Results

The sample results are summarized in the following table. A copy of the laboratory results has been appended.

Summary of Exhaust Stack VOC Sampling Results

Compound	Sample Result (µg/m^3 (1))
Total VOCs	920,000
Methyl Ethyl Ketone (MEK)	360,000
Isopropanol	200,000
Ethylacetate	150,000
n-Butylacetate	110,000
2-Butoxyethanol	100,000
Ethanol	74,000
m,p-Xylene	68,000
Toluene	47,000
o-Xylene	38,000
Ethylbenzene	34,000

(1) Note: ng/L = µg/m^3

I hope this information is of assistance to you. Should you have any questions, or if we can be of any further assistance, please contact me at (204) 668-3141.

Winnipeg Air Testing
Per:

Heather Wylie

Heather Wylie, B. Sc. (Hons), CRM
Industrial Hygienist