OASIS IN THE SKY: A Roof Garden for Sek On Tai Elderly Person's Housing

By Yau Ming Aloysius Wong, Dip. Design, Higher Dip. Design, B.Sc.

A practicum report submitted to the Faculty of Graduate Studies in partial fulfillment of the requirements for the degree of Master of Landscape Architecture.

Department of Landscape Architecture
Faculty of Architecture
University of Manitoba
Winnipeg, Canada

©Copyright by Yau Ming Aloysius Wong, 1997

National Library of Canada
Bibliothèque nationale du Canada

Acquisitions and Bibliographic Services
Acquisitions et services bibliographiques

395 Wellington Street
Ottawa ON K1A 0N4
Canada

395, rue Wellington
Ottawa ON K1A 0N4
Canada

Your file Votre référence

Our file Notre référence

The author has granted a non-exclusive licence allowing the National Library of Canada to reproduce, loan, distribute or sell copies of this thesis in microform, paper or electronic formats.

L'auteur a accordé une licence non exclusive permettant à la Bibliothèque nationale du Canada de reproduire, prêter, distribuer ou vendre des copies de cette thèse sous la forme de microfiche/film, de reproduction sur papier ou sur format électronique.

The author retains ownership of the copyright in this thesis. Neither the thesis nor substantial extracts from it may be printed or otherwise reproduced without the author's permission.

L'auteur conserve la propriété du droit d'auteur qui protège cette thèse. Ni la thèse ni des extraits substantiels de celle-ci ne doivent être imprimés ou autrement reproduits sans son autorisation.

0-612-32284-X

Canada

THE UNIVERSITY OF MANITOBA

FACULTY OF GRADUATE STUDIES

*****

COPYRIGHT PERMISSION PAGE

OASIS IN THE SKY: A ROOF GARDEN FOR SEK ON TAI ELDERLY PERSON'S HOUSING

by

YAU MING ALOYSIUS WONG

A Thesis/Practicum submitted to the Faculty of Graduate Studies of The University of Manitoba in partial fulfillment of the requirements of the degree

MASTER of LANDSCAPE ARCHITECTURE

YAU MING ALOYSIUS WONG 1997 (c)

Permission has been granted to the Library of The University of Manitoba to lend or sell copies of this thesis/practicum, to the National Library of Canada to microfilm this thesis and to lend or sell copies of the film, and to Dissertations Abstracts International to publish an abstract of this thesis/practicum.

The author reserves other publication rights, and neither this thesis/practicum nor extensive extracts from it may be printed or otherwise reproduced without the author's written permission.

ABSTRACT

OASIS IN THE SKY; A Roof Garden for Sek On Tai Elderly Person's Housing

This practicum explores the utility of the mostly barren and desert-like roof space of our residential buildings. The concept is to reclaim an otherwise uninhabited roof top and transform it into a pleasant and enjoyable recreational space, an "Oasis in the Sky." The concept is manifested through the location of activity zones and the design of associated structures in the confined roof environment. The project illustrates that "Oasis in the Sky" as an achievable concept. The design is complemented by a brief description of construction and site maintenance techniques.

In a time when urbanization has reduced on-ground recreational space to a minimum, the roofs of our buildings could be better utilized to provide a solution to this problem. Although the developed roof space could never replace natural green space on the ground, it would form a refuge of its own amidst the chaos of our urban centres, becoming an "Oasis in the Sky."

ACKNOWLEDGMENTS

Thank you to my practicum committee; Professor Carl Nelson Jr.(chair), Professor Charlie Thomsen, and Professor Ted McLachlan, for their enthusiasm, guidance, and especially for lending me a free hand in the whole process.

Thank you to Joseph Lo for sharing with me over the years some of his collections on Chinese garden, architecture, and other related topics. I also thank you for his hospitality during the final two months of this project.

Thank you to my friends/colleagues whom are also struggling to jump this last hurdle of the program for the support you all had given.

A special note to Doug Shearer, a colleague in my class. There is an old Chinese saying: "Learning has no sequential order, he who has achieved could declare himself a winner." In this stage of learning, you are ahead of me by two years.

A special thanks to Patty McKee for taking time to edit my manuscript.

Thank you to my family for all the love and patience. I am coming home at last!

The biggest thank goes to a dear friend Carol, for her love, patience, and support. I love you for your never ending encouragement that keeps me afloat throughout this project.

CONTENTS

ABSTRACT ii

ACKNOWLEDGMENTS iii

LIST OF DESIGN DRAWINGS vi

LIST OF FIGURES vii

1 INTRODUCTION 1

2 PARAMETERS OF THE STUDY 2

3 DESIGN CONCEPT 3
- Spatial Organization 4
  - Quiet and secluded Zone 4
  - Cool and Shaded Zone 5
  - Public and Exposed Zone 5
  - Transition and Linkage 5

4 THE ROOF GARDEN 7
- Site 7
  - Site Inventory 8
- Roof Garden 12
  - Design Process 12
- Construction Details 20

5 CONCLUSION 25

6 RECOMMENDATIONS FOR FURTHER STUDY 26
- Building Technology 26
- The Future Roofscape 26

7 APPENDICES 27
- 7.1 Design Constraints 28
- 7.2 Interview 30
- 7.3 Resident Profile 31
- 7.4 Winnipeg Climate Conditions 32
- 7.5 Chinese Garden Structure 35
- 7.6 Construction Methods 36
- 7.7 Weight of Garden Structure 37
- 7.8 Maintenance 38
- 7.9 Planting 39

8 DESIGN DRAWINGS 41

9 REFERENCES 61
- Bibliography 61
- Illustration Credits 64

LIST OF DESIGN DRAWINGS

A1.1	Existing Site Plan	42
A1.2	Sun path Study	43
A2.1	Proposed Site Plan	44
A2.2	Garden Deck Plan	45
A2.3	Axonometric View of Garden Structure	46
A2.4	Garden Structure Arrangement	47
A2.5	Decking Framework	48
A2.6	East Elevation	49
A2.7	South Elevation	50
B1.1	Pavilion / Gazebo detail	51
B1.2	Pavilion / Gazebo Assembly	52
B1.3	Pavilion / Gazebo Component	53
B1.4	Pavilion / Gazebo Component	54
B2.1	Pergola Detail	55
B2.2	Pergola Assembly	56
B2.3	Pergola Component	57
B2.3	Pergola Component	58
B3.1	Gazebo Detail / Decking Assembly	59
B3.2	Pavilion / Gazebo seating, Planter Detail	60

LIST OF FIGURES

Fig. 1	Proposed Sit Plan	6
Fig. 2	Sek On Tai Elderly Person's Housing	7
Fig. 3	View of the Roof Top Environment	10
Fig. 4	The City View from the Roof Top	11
Fig. 5	Artist's Illustration of Interior of Pavilion	14
Fig. 6	Artist's Illustration of Sun Deck	17
Fig. 7	Deck Frame Assembly	20
Fig. 8	The Arrangement of Rafters at the Summit	21
Fig. 9	Gazebo Components Assembly	22
Fig. 10	Pergola Components assembly	23

1 INTRODUCTION

Urban development has turned our city centers into massive concrete jungles, where almost every square inch of open ground built over and sealed by an impermeable layer of concrete and asphalt. As a result, green space in our urban centers is limited to a few city plazas, parks, and other public spaces. As available space continues to dwindle, city dwellers are striving harder to find suitable spaces for leisure and recreational purposes. Yet, on top of these developments lie "thousands of barren, desert-island rooftops amidst a network of everflowing vehicular traffic."[1] Today, the demand for outdoor recreational space is greater than ever. In our urban environment, especially with high-rise apartment buildings, these neglected rooftops could be better utilized as potential outdoor spaces. With some effort, these rooftops can be turned into pockets of safe and accessible spaces suitable for year-round outdoor activities.

This practicum examines the potential of a roof garden as an alternative outdoor space in today's residential building development for aging Chinese community.

[1] *Islands in the Sky* by Randall Epp, Unpublished Thesis, University of Manitoba, 1983, p.1

2 PARAMETERS OF THE STUDY

This practicum will focus on the design of a roof garden.

The objectives of this study are to explore the concept of the roof gardens as an alternative outdoor space in a modern high-rise housing development, and to discuss the adaptability of this space to suit the climatic conditions of the City of Winnipeg.

The design proposal will satisfy three kinds of activity: gardening, sitting and conversing, and exercising. The design will consider safety for elderly residents, use of local (Manitoba) materials, and architectural form, detail and material familiar to specific cultural group.

3 DESIGN CONCEPT

"Urban areas are likened to concrete mountains with streets like valleys; roofs of buildings correspond to alpine meadows and pastures and the walls to slopes and terraces; open spaces are like steppes and deserts; and shady courtyards resemble ravines."[2] The intent of this project is to illustrate that on the roofs of our residential buildings lay great potential and opportunities for developing into pleasant and enjoyable recreation spaces.

The concept is to reclaim the sterile, barren, desert-like roof, adapt the space to the characteristics of its context, and transform it into a refuge amidst the chaos of our urban centre, creating an "Oasis in the Sky".

---

[2] *Building Green: A Guide to Using Plants on Roof, Walls and Pavements*, Jacklyn Johnston, London Ecology Unit, 1994, p.9

SPATIAL ORGANIZATION

'Oasis in the Sky' is manifested through the creation of three major activity zones; where a visitor might seek quiet and solitude in one, socialize, exercise and play in another, enjoy or tend the garden in yet another.

The allocation of the activity zones takes into consideration the distinctive site characteristics of the roof deck which are related to sun exposure, city view, dimensions of available space, access points from the building and other factors.(see appendix 7.1 'Design Constraints'). The three activity zones are as follows:

- quiet and secluded zone in the southeast and northwest corners
- cool and shaded zone in the north and east
- public and exposed zone in the south and west

An informal transition and linkage system will integrate these three zones into a tightly-woven environment. A visitor could follow this pathway, strolling from one zone to another with relative ease.

The theory of allocating the activity zones to these locations is to maximize the site opportunities so as to ensure that the roof garden will provide a pleasant and enjoyable environment for the residents of the building (see fig. 1 'Proposed Site Plan').

The Quiet And Secluded Zone

The quiet and secluded zone is intended to be a place where a garden visitor could seek peace and solitude with minimal interference from natural elements. It is a sheltered space with lattice screens which permit visual contact between the interior and exterior. The atmosphere in this zone is to be casual and relaxed. The space will be furnished with a sitting platform that allows for multi-functional usage.

Cool And Shaded Zone

Situated in the northern and eastern section of the roof deck, the cool and shaded zone takes advantage of the special environment produced by the massive mechanical room structure. This zone will be an extended stretch of space under a vine covered pergola structure. The shade from both the mechanical building and vine-covered pergola would provide a comfortable sitting area for people who want to escape from the summer sun and heat. Residents would be encouraged to bring garden furniture into this area and make this space a place for small group gatherings or even larger social events.

Public And Exposed Zone

The public and exposed zone is located at the southwestern section of the roof garden. Its location maximizes the availability roof space, unobstructed views of the city and solar exposure. This space allows residents to participate in outdoor activities. For this reason, there will be a gardening area for vegetable growers, a gazebo for casual sitting, and a sun deck area for various kinds of light exercises and other leisure activities.

Transition and linkage

The three activity zones are connected through an informal linkage system. This system will consist of a verandah or a path through the three activity zones, where a person walking through it will experience the changing characteristics of the roof garden.

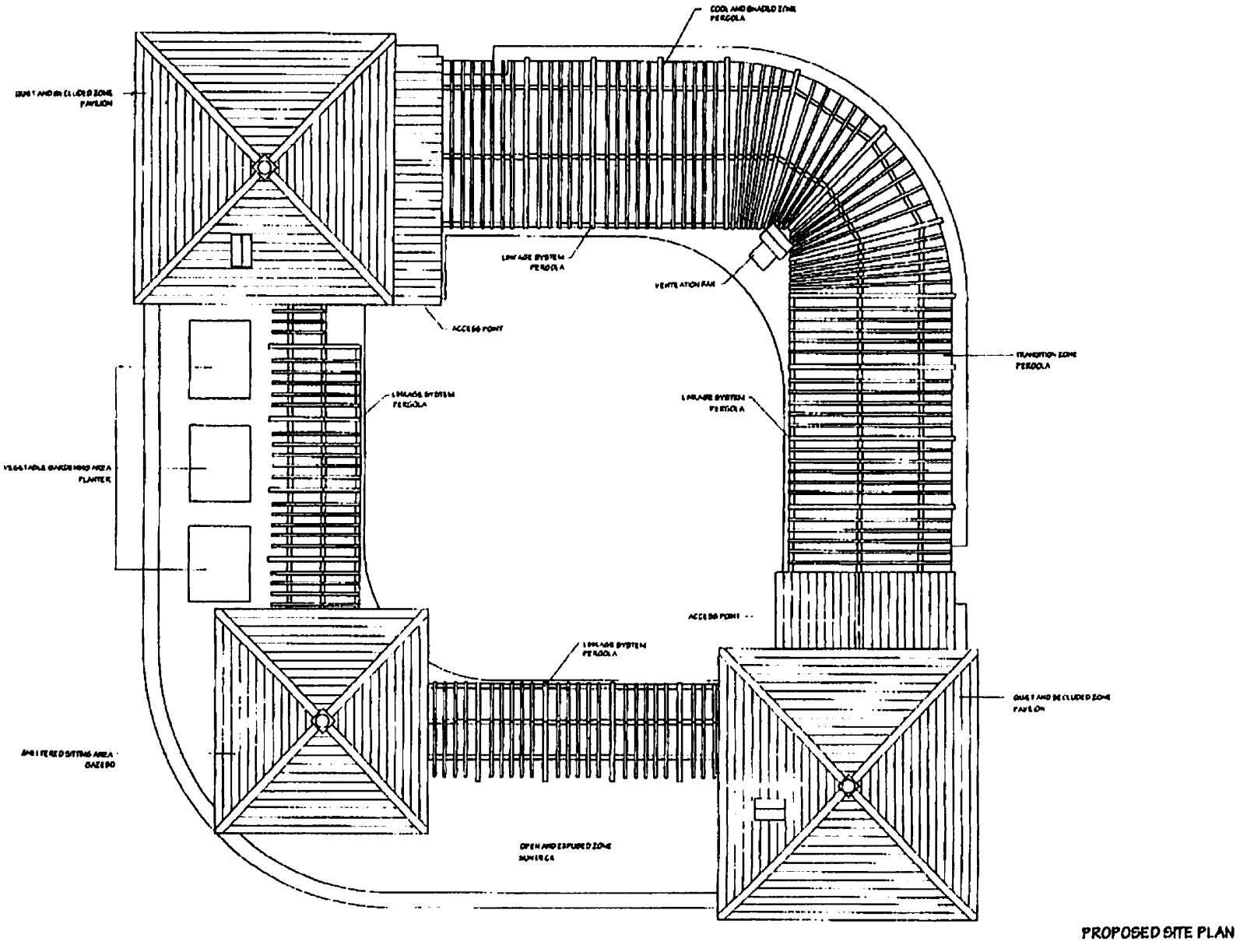

fig. 1 The Proposed Roof Garden Plan.

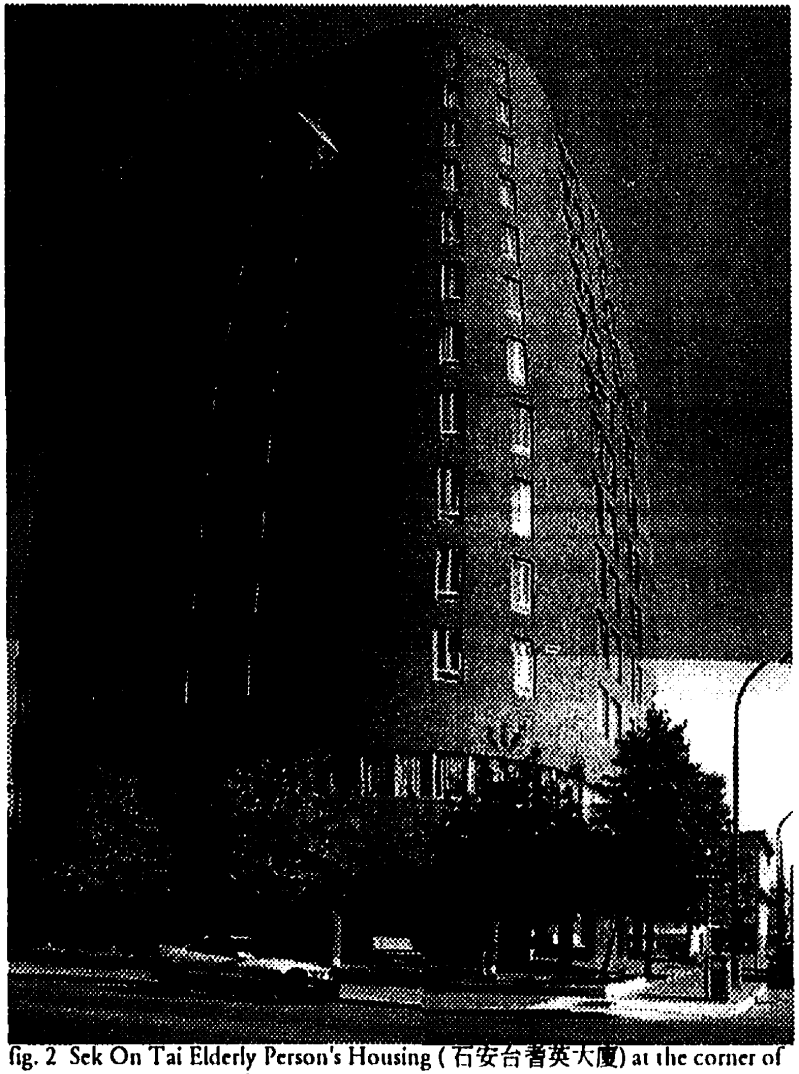

fig. 2 Sek On Tai Elderly Person's Housing (石安台耆英大廈) at the corner of Princess Street and Pacific Avenue, Winnipeg.

4 THE ROOF GARDEN

SITE

Sek On Tai (石安台耆英大廈) located at the corner of Pacific Street and Princess Avenue, is a Manitoba Housing Authority building built for Chinese seniors living in Winnipeg in 1976 (see fig. 2 'Sek On Tai Elderly Person's Housing'). The building offers self-contained rooms for the tenants who live independently. The building itself offers limited amenities. Currently the entire second floor is designated as the community room for the tenants and is run by the tenants' association of the building. There is no outdoor ground space other than a small area in front of the entrance at the street level. The roof top offers an opportunity for additional outdoor recreational space, with an area approximately 70 feet square. A lounge and mechanical room occupy the center location, leaving a ring approximately 16 feet wide running along the four sides of the building. There are also chimneys, drainage holes and ventilation pipes on the floor of the roof. Although a roof garden was originally planned for the building, it has never materialized and the space was left vacant. Today, the roof is not utilized as an outdoor space by the residents.

SITE INVENTORY

Physical Description of Site

The proposed roof garden for the residents of Sek On Tai is on the roof of the building. The finished grade of the roof deck varies between 119' - 6" and 119' - 11" above the established main floor datum which is set at 761' - 8" feet above sea level. The variation in finished grade of the roof deck represents the drainage mechanism of the roof. The dimension of the roof deck measures 65 feet square between the interior surface of the parapet wall. A slightly off-centered enclosure housing the lounge, laundry room and mechanical room occupies the center location of the roof leaving a 16' - 6" wide space running along the south and west sides and a 13' - 6" space along the east and north edges of the roof. A 4' - 2" tall parapet wall encircles the entire roof. There are two access locations from the enclosure onto the roof; one is on the southeast corner and the other is on the northwest. The southeast access is considered to be the primary entrance to the roof. It is equipped with a ramp which extends from the threshold towards the elevator and lounge area. The elevation at both thresholds is 120' - 6" above the established main floor datum. A finished floor datum is to be established throughout the proposed roof garden at this same level. In addition, the northeast and southwest corner of the building are curved with a radius of 20' - 4". There are also chimneys, drainage holes and ventilation pipes on the floor of the roof. The anticipated garden will sit on this space. (see fig. 3 'View of the Roof Top Environment' & drawing A1.1 'Existing Site Plan')

Fig. 3 Views of the Roof Top Environment. Top: Standing at the SE corner of the roof looking towards the primary access to the roof. In the foreground is a ventilation fan and in the right is an air conditioner unit. Middle: The north exit at the NW corner. A drainage hole is located in the foreground, a little further back is another ventilation fan and a ventilation stack. Bottom: View of the roof from the SW corner. Three of the four ventilation fans are clearly seen. The two protruding pipes are the ventilation stack.

Load bearing

The load bearing for each of its floors including the roof is constant throughout. It has a live load of 40 pounds per square foot (psf) and a dead load of 160 psf. The live load takes into account the snow load roof requirement of the City of Winnipeg as well as the weight of ventilation fans and other mechanical equipment that might be installed on the roof. The dead load of the building is of importance to the design of the roof garden since it restricts the kind of development that might be involved. The combined weight of the eight-inch reinforced concrete floor with six inches of lightweight concrete, and insulation materials reaches approximately 130 psf. This leaves approximately 30 psf for the proposed garden building materials, including the weight of the visitors.

Micro-climate

With no tall buildings in its proximity, the roof is exposed to sun and wind. However, the mechanical room at the center creates three distinctively different zones: a shaded area in the north, a partial-sun exposure zone in both east and west and a full-sun exposure zone in the south (see drawing A1.2 'Sun Path Study'). The presence of the mechanical room does provide some protection from wind on the lee side, however, the curves of the parapet wall deflect wind into the lee area making the whole roof prone to strong winds.

View

There are no obstructions on all four sides of the building, thus it enjoys a full 360 degree view of the City of Winnipeg. However, the mechanical room at the centre of the building prevents one from looking across the building. The unrestricted city view is a valuable asset that plays an important role in the design of the roof garden (see fig. 4 'City View from theRoof Top of the Building').

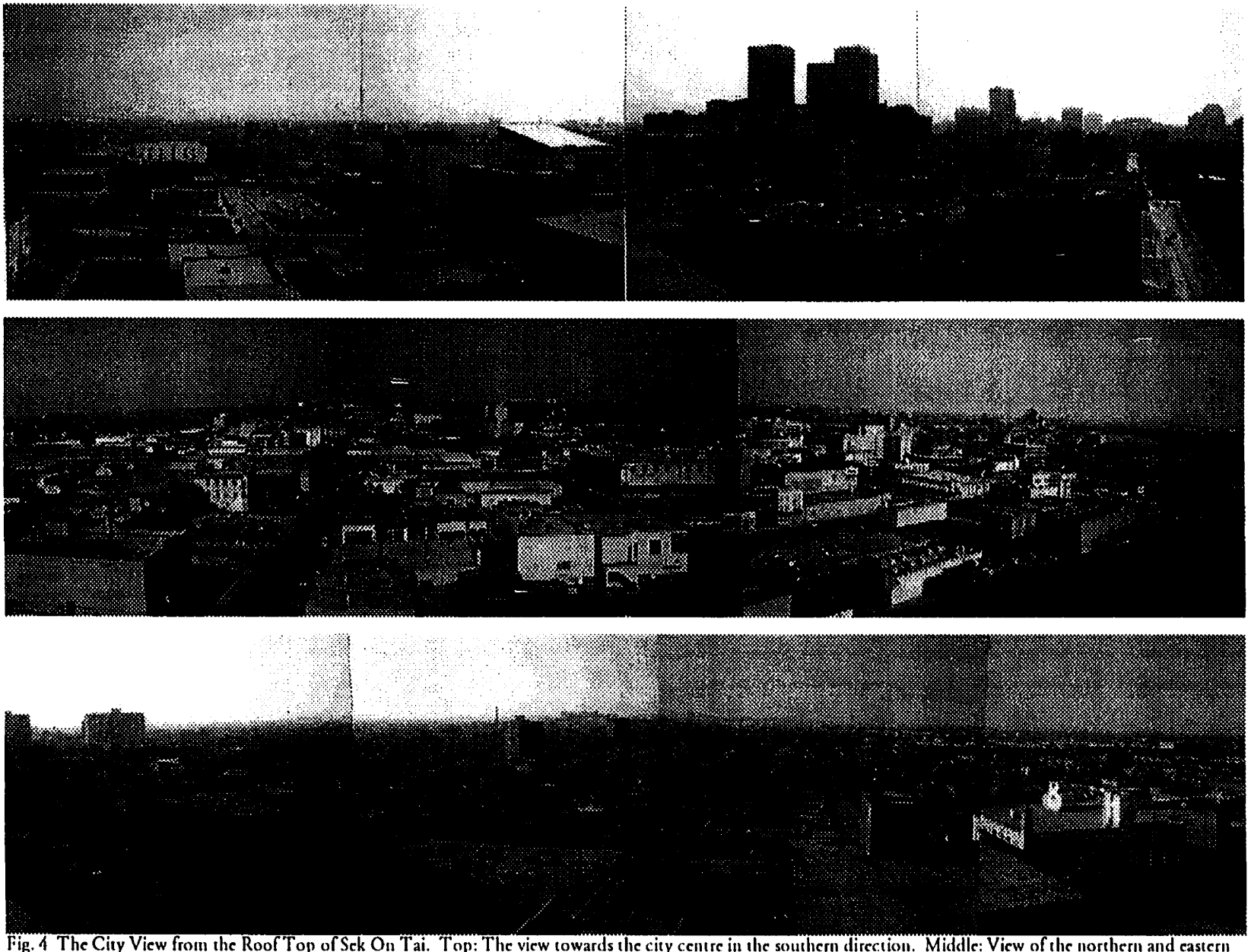

Fig. 4 The City View from the Roof Top of Sek On Tai. Top: The view towards the city centre in the southern direction. Middle: View of the northern and eastern part of the city. Bottom: The view towards the west.

ROOF GARDEN

Design Process

The design process began in September 1996 with a site visit and an interview with the Housing Manager of Sek On Tai (see appendix 7.2 'Interview'). Subsequent site visits increased familiarization with the exact dimensions, as well as the architectural and mechanical details of the site.

The initial task of the development of the design proposal was to determine the type of activity most suitable to the site environment. It was decided that because the residents were senior citizens, their activities were most likely passive. Five major activities were identified: quiet sitting; social gathering; vegetable gardening; exercising; and casual sitting. The procedure followed was to identify the most suitable locations for each of these activities. Factors like sun exposure, city view, dimensions of available space, access points from the building, mechanical equipments and others were carefully considered. The evaluation of site characteristics yielded the five locations most suitable for these activities. These five locations were further grouped into three major activity zones – the quiet and secluded zone, the cool and shaded zone and the public and exposed zone.

The development of the design proposal had been influenced in part by a study conducted previously on the subject of the making of a Chinese garden. The application of the knowledge was most visible in the selection and design of garden elements. Yet, the flavour of a Chinese garden was expressed in a subtle and inconspicuous way. It was hidden in the arrangement of the garden features, the treatment of the pathways and the interplay of contrasting elements in the setting.

The Selection of Garden Elements

Once the primary activity zones had been determined, the immediate step was to design suitable garden structures for each of the zones. At this point, Chinese garden architecture played an important role in determining the type of structures to be introduced. Three types of structures were selected to accomplish the functional requirements of the zones. They are *Xuan* (軒) *Ting* (亭), and *Lang* (廊). (see appendix 7.3 'Chinese Garden Structures') These structures were adopted and modified to fit into the proposed roof garden. This included structures of two pavilions, a gazebo, and three stretches of pergola.

The Pavilion – *Xuan* (軒)

The pavilion offers two sheltered and screened enclosures that are designed to allow visitors to perform a wide variety of indoor activities such as meditating, reading, socializing or playing a game of chess. To facilitate these activities, the pavilion was furnished with a sitting platform. This sitting platform is eighteen inches above the finished garden deck datum and occupies two-thirds of the interior space. A space three feet square is cut into the platform where it faces the pergola. The function of the sitting platform is to allow visitors freedom to select their favourite posture, whether it is to sit upright, lean against the lattice or to lie down. The interior setting is enhanced by the use of lattice as the separation between the interior and exterior spaces. The lattice openings provide privacy for the occupants inside while allowing for visual and physical continuity between interior and exterior (see fig. 5 'Artist's Illustration of Interior Space of Pavilion').

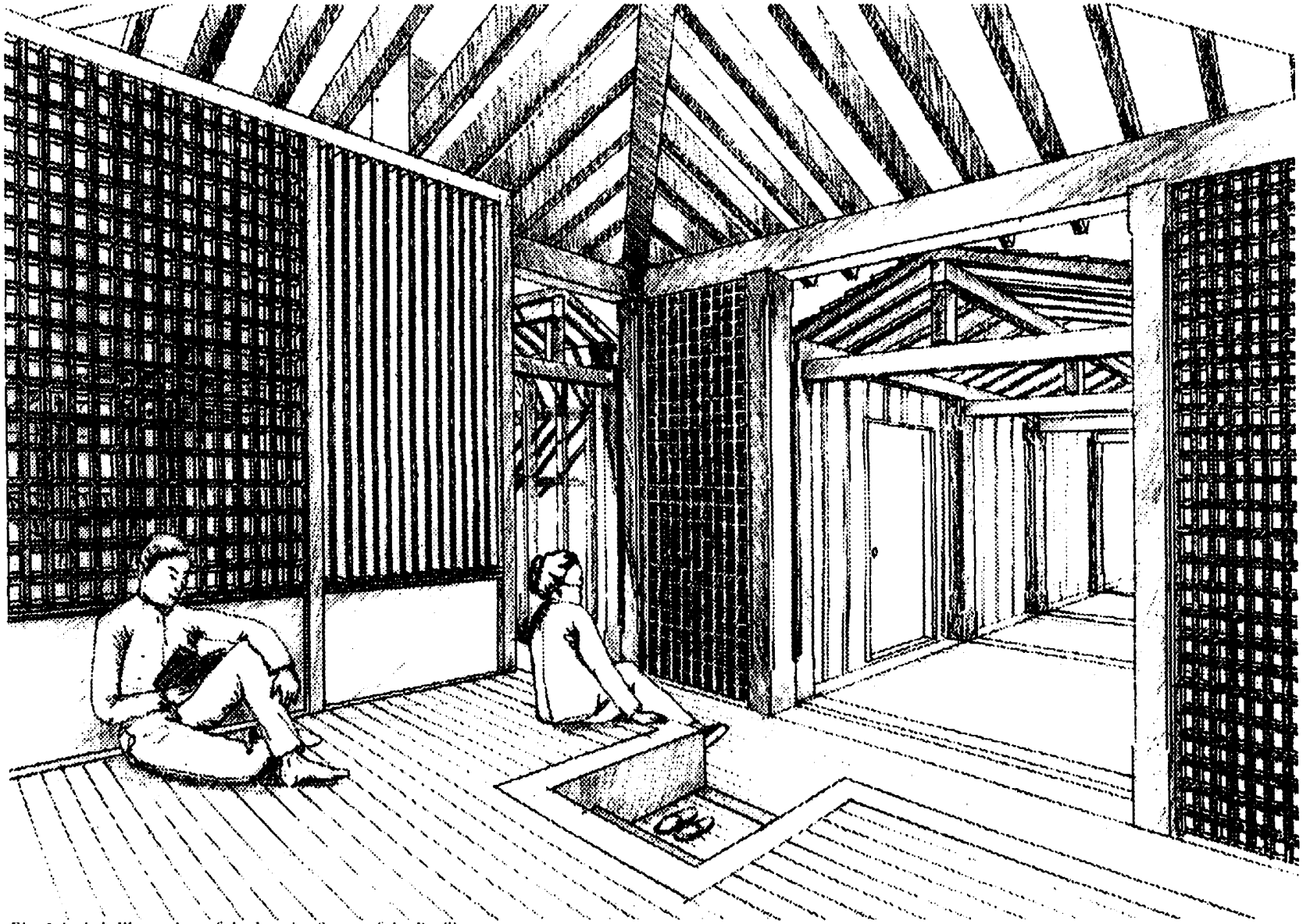

Fig. 5 Artist's Illustration of the Interior Space of the Pavilion.

The Gazebo – *Ting* (亭)

The gazebo provides a sheltered, casual sitting environment in the southwest corner of the garden. The gazebo has an attached bench built into the supporting columns on the southwestern half of the structure and is accessible within a short distance from the patio opening of the lounge. The gazebo is modeled after the most distinguishable garden structure inside a traditional Chinese garden, *Ting*. As with its archetype, the function of the gazebo also serves as a rest stop for the garden visitors. Visitors could seek shelter under the canopy and enjoy the exceptional city view form the roof top. This strategically located structure ties the sun deck and the gardening area together making it the focal point of the public and exposed zone.

The Pergola – *Lang* (廊)

There are three stretches of pergola on the roof garden. One runs along the northern and eastern rim, one on the southern side and another on the western wing. The southern and western sections are part of the public and exposed zone, while the northern and eastern sections belong to the cool and shaded zone.

Located in the southern and western part of the roof garden are two stretches of pergola that connect the two pavilions with the gazebo in the public and exposed zone. These two stretches of pergola have an open and exposed character. Their appearances are modeled after the verandah of a traditional Chinese garden. Like their archetype, they also function as a connecting element as well as a space determinant. The overhead structure of the pergolas formed by a series of rafters act as a transition between the building and the garden space.

Located in the northeastern part of the garden, this stretch of pergola offers a distinctly cool and shaded area of the roof garden. The structure is divided into two sections. The northern section is specifically designed for casual seating, social gathering and other group activities. Lattice screens are placed between the supporting columns of the pergola along the parapet wall to serve as a wind buffer as well as to allow vines to climb on it. A lattice screen that stretches the entire length of the inner

side of the pergola shields the view of the aluminum wall of the mechanical room. A series of planters are located along the two sides of the pergola. Slow creepers or vines are planted in these planters in order to allow prosperous growth to cover the entire structure.

The eastern section of the pergola serves as a transitional space between the primary access and the roof garden. To the south, it leads towards a gazebo. To the north, it connects to the seating area. Like the northern section, lattice screens and planters are placed between the supporting columns. It is intended that the entire pergola structure will be covered by climbing creepers and vines.

The Garden Deck

The garden deck is an important element of the roof garden. It provides a walking surface for the visitors, and the foundation and structural support for the structures above. The garden deck covers the entire roof garden. It is sub-divided into areas corresponding to the uses above. The sun deck in the south and the gardening area in the west are two areas that have no covering structures. They are the open spaces of the roof garden.

The sun deck which occupies the south section of the roof garden is accessible directly from a patio door opening from the lounge. Alternative accesses are from the pavilion in the east and from the gardening area in the west. A pergola stands between the lounge and the garden deck. The sun deck enjoys an unobstructed southern view towards the city's downtown core. It is designed as the primary open space for the roof garden. It is anticipated that the area will be used for a wide variety of outdoor activities such as performing *Tai-chi* exercises, walking, picnicking or potted plant gardening (see fig. 6 'Artist's Illustration of Sun Deck').

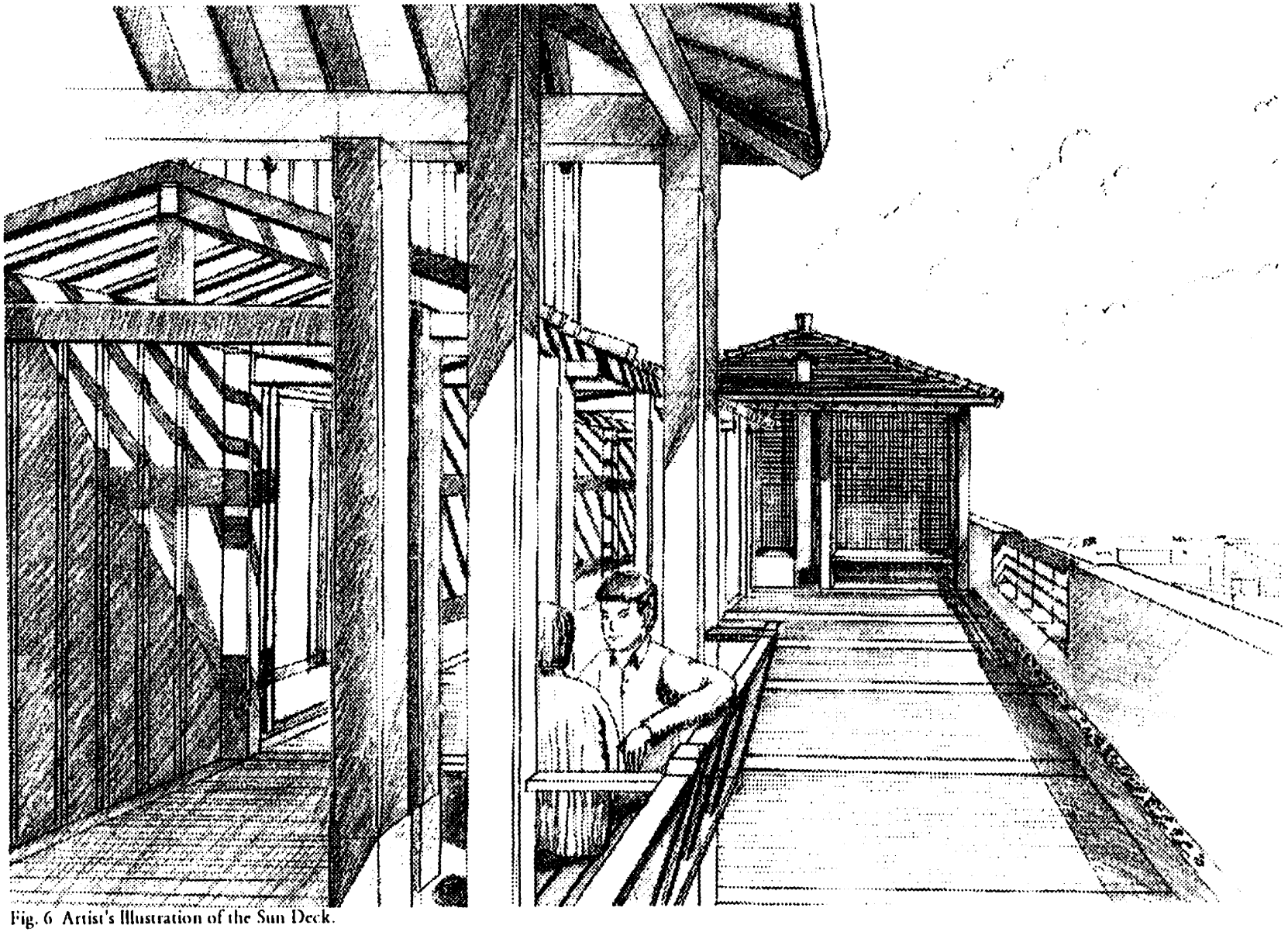

Fig. 6 Artist's Illustration of the Sun Deck.

The gardening area on the west side of the roof garden provides the residents with an area in which they could grow vegetables during the summer months. Three planters measure four feet by five feet six inches and thirty inches high are placed in a row three feet apart between the pavilion and the gazebo. To facilitate irrigation, each planter will have an independent water supply. The placement of the planters in this location make it possible for the residents to see the fruit of their efforts from the laundry room.

The Linkage Pathway

The roof garden is connected by an informal transition and linkage system signified by the cross beam and kingpost configuration of the pergola. It is a continuous structure that encircles the entire roof garden. The pergola has two distinct sections, one has an closed and concealed quality and the other has an open and exposed character.

The closed and concealed section offers a distinctly shaded environment on the northern and eastern part of the garden. The vine covered canopy and lattice openings work together to create a mystic environment for the visitor. The partly obscured city view forces visitors to peek through the vine covered lattice openings as they walk along. The confined and restricted views are complement by the two screened pavilion spaces at both ends. It is the intention that when people arrive at the pavilion, they can feel the warmth of the interior space created by the shadow of the lattice partition on the sitting platform.

As a visitor steps out from the pavilion onto the sun deck area, he or she is being led by the open and exposed section of the pergola. Under the canopy formed by the rafters, the visitor is shown the bench of the gazebo at the farther end. The open appearance of the pergola is because of an absence in lattice screening and vine planting. In this way, the city view and the sun deck will seem to flow into the lounge and laundry area with little obstruction. The pergola then becomes a transition space in between the interior and the exterior. Like the closed and concealed section, these two stretches of pergola also terminate in a pavilion. However, the setting is a complete contrast. A visitor would be confronted by a dimmed and shaded space. The

sitting platform inside would become an inviting element for a rest. As people travel from bright to dark, from open to close or vice versa, he or she would experience the changing quality of the garden.

Dealing With Existing Roof Fixtures

One of the greatest challenges of the project is in dealing with the existing roof fixtures such as ventilation fans, sewage pipe openings, air conditioner and the existing roof deck surface. To make the matter more complicated, some of these fixtures are located in places where they would stand in the way of the proposed structure. The solution proposes to accommodate these fixtures into the future design. The two pavilions located on the southeastern and northwestern corners, for example, have ventilation fans and the exhaust shafts being incorporated into the structures.

A major design problem for the roof garden was to develop a supporting structure seven inches high that could fit the height allowance between the existing roof deck and the proposed deck datum. The deck must accommodate the supporting beams, floor joists and decking. It also must be free from blocking the drainage mechanism of the existing roof. The solution combines a Chinese method of using hidden tenon and mortise joints with a standard stub and sill joint of timber frame construction(see fig. 7 'Deck Frame Assembly'). The resulting foundation structure effectively meets the specifications and fit tightly within the height limit.

CONSTRUCTION DETAILS

The garden is to be constructed out of Bur Oak (*Quercus macrocaarpa*), which is a native Manitoba tree species. The idea is to display Chinese architectural design through an indigenous Manitoban building material. Chinese architectural design is exhibited through the garden structures and the extensive use of tenon and mortise joints. It is anticipated that the finished roof garden will present a unique and at the same time culturally familiar environment for the residents of the building.

The Garden Deck

Due to the limited height allowance between the existing roof surface and the finished roof garden deck datum, the entire garden deck is constructed out of a grid foundation system using eight inch by seven inch oak beams as the major members. The grid is then sat directly on the roof surface. The joists for the decking measures four-by-five inches and are spaced two feet on center. The mechanism of connecting the joists to the beams is by setting a smaller piece of wood into the beams before the joist is attached (see fig. 7 'Deck Frame assembly' and see drawing B3.1 'Decking

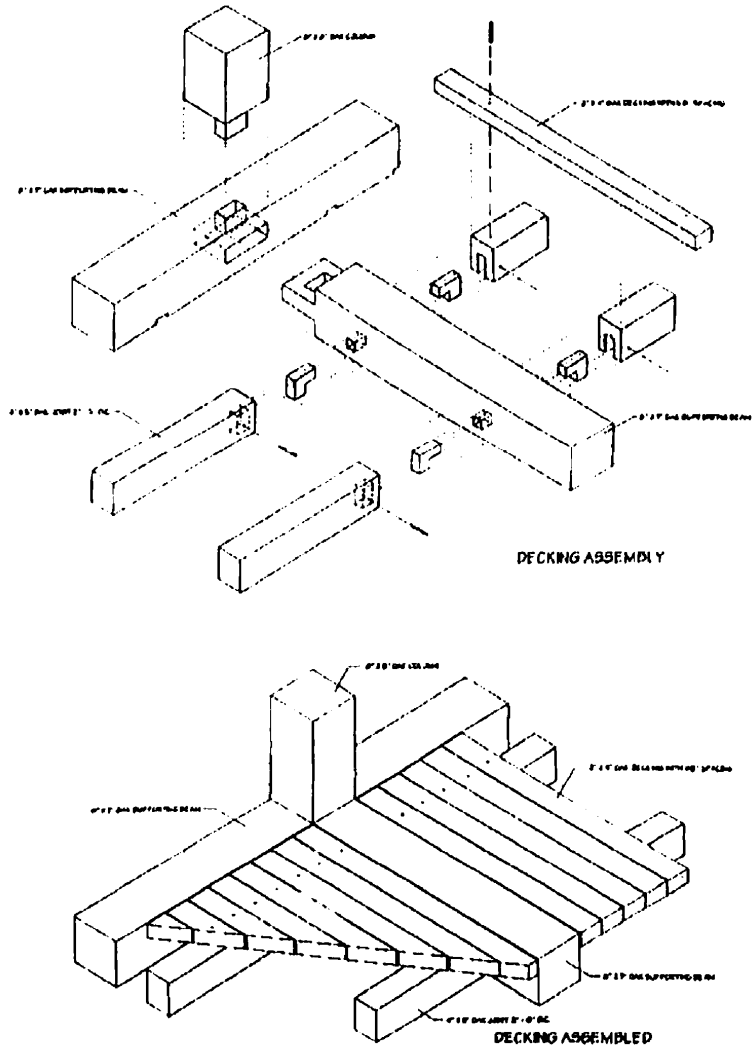

Fig. 7 Deck Frame Assembly.

Assembly'). A small receptacle slot is chiseled out on the under side of the joist to allow it to be fit with the piece of wood. To secure the joist from uplifting, a half inch diameter peg is driven through the joist and the supporting wood piece. After all the joists are secured then a two by four decking is laid on top. The finished deck surface should be flush with the top of the oak beam foundation.

The Pavilions and Gazebo

The pavilions and gazebos are constructed with a similar structural framework. Each structure is to be supported by twelve eight-by-eight columns that are set into the foundation grid by stud tenon and sill mortise joints. A six-by-eight plate beam is held up by two corner columns on both ends and two centre columns in the middle. The four supporting corner columns receive the sloping principal rafters with a stud tenon and sill mortise joints. At the summit, these four principal rafters are jointed together by a blind and self-interlocking tenon and mortise joint system(see fig. 8 'The Arrangement of Rafters at the Summit'). The common rafters are laid one foot three inches apart on center with the top ends attaching to the principal

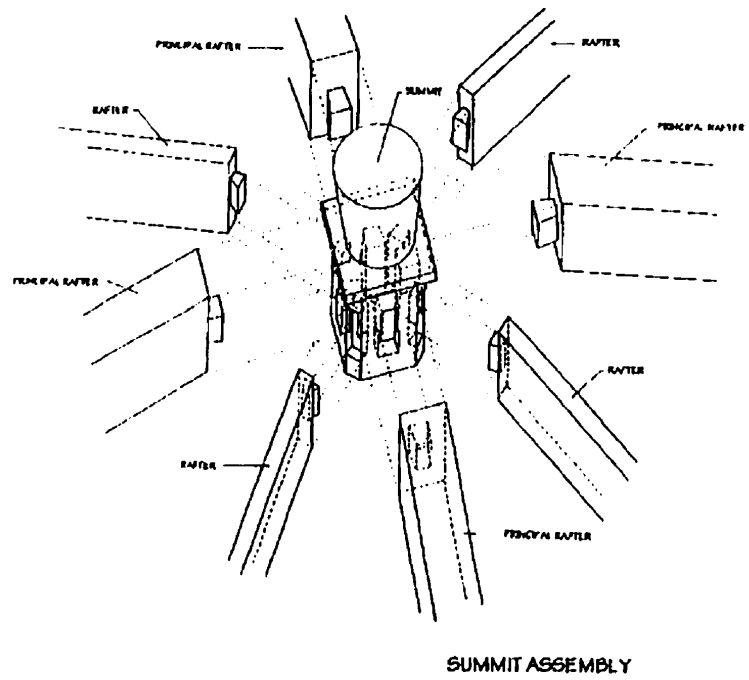

Fig. 8 The Arrangement of Rafters at the Summit.

rafters with blind tenon and sill mortise joints and a bird's mouth sitting on the plate beam one foot three inches from the lower end (see fig. 9 ' Gazebo Components Assembly').

The roofs of both pavilions and the gazebo are covered by standard cedar roofing shakes. A layer of one-by-four oak plank nailed to the common rafters provides the base for the building felt paper and the batten to be secured. The shakes are center nailed and random onto the batten. A one-by-four piece of oak forms the fascia board of the roof.

The pavilions have two forms of screening, lattice screening and vertical bar screening. The lattice screening has two-and-a-half inch square openings. The frames for these lattices are made up of one-inch-by-one-and-a-half inch oak with full half lap joints. They are placed between the supporting columns on the outer one third section of the pavilion. The middle section of the pavilion are formed by vertical bar screening. They are assembled from one-inch-by-one-and-a-half inch oak with two-and-a-half inch separation.

The sitting platform is constructed eighteen inches above the garden deck. It is supported by a series of joists

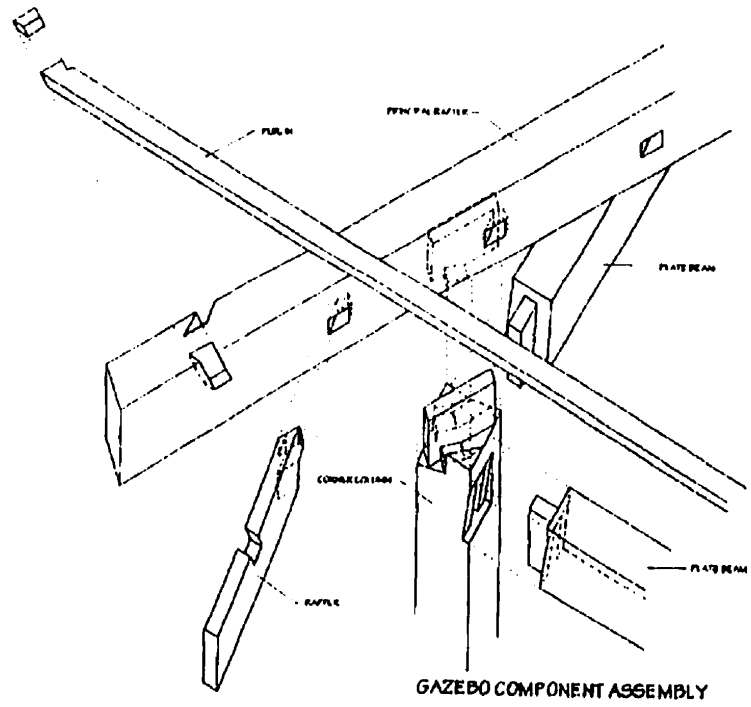

Fig. 9 Gazebo Components Assembly.

and beams that form the supporting structure of the platform (see drawing B3.2 'Pavilion / Gazebo Seating Detail') The construction of the platform employs the same joinery system as the garden deck construction. A three foot square landing with three steps is built into the structure.

The Pergolas

Like the pavilions and gazebo, the supporting six-by-six columns are set into the foundation grid five-and-a-half feet on center using stub tenon and sill mortise joints. A four-by-six cross beam is set into the supporting columns seven feet and six inches on centre above ground by using two variations of tenon and mortise joints; a through joint facing outward to the garden and a blind joint facing towards the aluminum wall of the mechanical building. The top section of the pergola structure employs a king post supporting configuration. The king post sits on the cross beam that in turn provides support to the ridge plate beam above. Two parallel plate beams running on either side of the supporting rows of columns complete the beam structure. The pergola is decorated with two different kinds of rafter; four inch square and two inch square. The variation in rafter sizes provides visual rhythm to the otherwise uniform columns (see fig. 10 'Pergola Components Assembly').

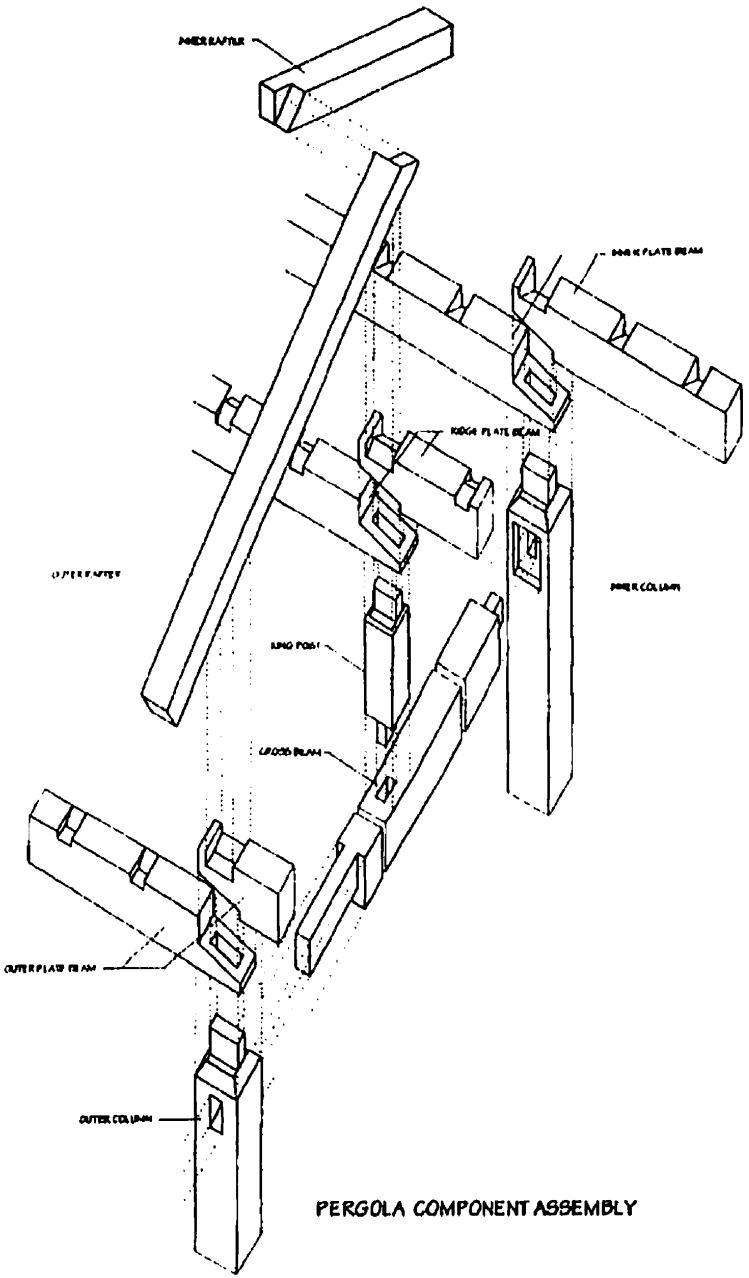

Fig. 10 Pergola Components Assembly.

Finish Coating

The entire roof garden structure will be treated by a coating of bleaching oil. This treatment produces a grey shade on the wood very similar to a naturally weathered effect. The grey weathered effect complements a design consideration. Since the garden structure is completely exposed to the environment, it is the intention of the design that the imprint of the passing time will be etched on the structure. As time passes, the structure will becomes richer in character. The darkened wood members, the markings of rain water, the weathering from foot traffic; all these qualities will be incorporated into the garden and will be shared by all visitors.

5 CONCLUSION

The roof garden for Sek On Tai Elderly Person's Housing is conceived of a need to fully utilize the mostly vacant, barren and desert-like roofs of a modern high-rise housing complex. It is a design solution that deals directly with site specific constraints and creates a pleasant and enjoyable recreation space for the residents of the building.

The proposed roof garden displays Chinese architectural design through an indigenous Manitoban building material. Chinese architectural design is exhibited through the garden structures and the extensive use of tenon and mortise joints. The finished roof garden will present a unique and culturally familiar environment for the residents of the building.

In a time when urbanization has reduced ground recreation space to a minimum, the roofs of our buildings could be better utilized to provide an alternative solution to this problem. Although the developed roof space could never replace natural green space on the ground, it would form a refuge of its own amidst the chaos of our urban centres, becoming an "Oasis in the Sky."

6 RECOMMENDATIONS FOR FURTHER STUDY

6.1 BUILDING TECHNOLOGY

There lies great potential in developing the under utilized roof top of our buildings into an enjoyable recreation space. However, most of our buildings do not include such an endeavor in their plans because of additional load onto the structure requires extra cost. This creates loss of opportunity in maximizing our resources and improving our living environment. In order to better use this otherwise unproductive space, collective efforts from professions related to the building industry are encouraged to develop ways that could make roof garden a permanent feature of our buildings. The improvement of building technology and the development of light weight building materials is a critical step in seeing roof gardens becomes prevalent.

6.2 THE FUTURE ROOFSCAPE

In a time when urbanization has reduced ground recreation space to a minimum, the roof of our buildings could be a feasible alternative space for this problem. As the increased density of our cities continues, pressures could be felt by people in the building industry to search for better ideas to develop this untouched territory.

This practicum explored one solution in turning the roof space into a refuge for the residents of Sek On Tai Elderly Person Housing complex. There are many other ideas still waiting to be explored and developed. In order to create a better urban living environment, further study is necessary to transform our future roofscape into pockets of green spaces which become "Oases in the Sky".

7 APPENDICES

•7.1 Design Constraints 28

•7.2 Interview 30

•7.3 Resident Profile 31

•7.4 Winnipeg Climate Conditions 32

•7.5 Chinese Garden Structure 35

•7.6 Construction Methods 36

•7.7 Weight of Garden Structure 37

•7.8 Maintenance 38

•7.9 Planting 39

Appendix 7.1

DESIGN CONSTRAINTS

Space:

The usable space for the roof garden is rigidly limited by the presence of the mechanical room, chimneys and vents found on the roof. As well, the available space is long and narrow (fig. 3 'View of the Roof Top Environment'). The program calls for a maximization of available space for the proposed roof garden.

Access:

Circulation systems must account for the physical abilities of the users. Any inadequacy will limit potential users from enjoying the roof garden.

Confinement:

The perimeter of the roof garden must be surrounded for safety reasons by a parapet wall, a fence or a combination of both, evoking feeling of confinement.

Weight:

An important technical and cost constraint is in determining where and how much weight can be placed on the roof. Objects are not limited to people, plants and surface materials but shall include rain, snow and any other objects.

Height:

The possibility of plant materials, structures, etc. being turned over by strong winds commonly experienced on roof gardens.

In climate Conditions:

Sun – direct sun exposure may cause problems to people, plants and surface materials; reflections from certain types of surface materials could limit the utility of particular areas of the roof garden.

Winds – the lack of adjacent tall structures as wind barriers and the typically higher velocities on the roof deck.

Rain – problem is directly related to drainage. An adequate and efficient drainage system is important to prevent damage to floors below and the surface materials themselves.

Snow – problems are directly related to its weight and removal. It may also cause drainage problem during the spring thaw.

Drainage:

The drainage system must adequately remove water due to storms, prolonged rain and snow melt as well.

Appendix 7.2

INTERVIEW

With Whom: Mr. Ike Reimer
Housing Manager
Place: Winnipeg Chinatown Housing Corporation
100-201 Princess Street
Winnipeg, Manitoba
Date: September 30, 1996
Time: 10:00 a.m.

The meeting was arranged to achieve three objectives.

1. To meet with Mr. Reimer and explain to him about the purpose and the scope of my undertaking.

2. To ask for his assistance in providing information pertaining to this practicum. This includes a briefing on the history of the building, the demography of the residents, and their life-styles (see appendix 7.3 'Resident Profile'). During this meeting, Mr. Reimer also agreed to arrange a time for me to take photographs of the roof and the living environment of the building and loan the set of architectural drawings for my reference.

3. To facilitate a tour on the premises that would allow myself to familiarize with the living environment, the facilities and the most important of all, to visit the site of this practicum which is the roof of the building.

Subsequent visits were made on October 4 & 18, 1996 to take pictures of the site.

Appendix 7.3

RESIDENT PROFILE

The demographic profile of the residents is obtained from an interview with the Housing Manager of the Winnipeg Chinatown Housing Corporation, Mr. Ike Reimer on September 30th., 1996.

Profile

There are about one hundred seniors residing in the building, 95% of them are ethnic Chinese. The average age is 82. Among them, female makes up 70 to 75% of the population. About 80% of the residents are originally from Toi-San (台山), fertile and prosperous agricultural region within the Province of Guangdong, China. Others are mostly from Hong Kong. A few of the residents came from Northern China. According to the Housing Manager of the Winnipeg Chinatown Housing Corporation Mr. Ike Reimer, all of the residents live alone and many of them require daily visits, meals on wheels and other services. Although they are at their golden age, fortunately they are quite mobile and require no wheel chairs services so far.

Daily Activities

Most residents of the Sek On Tai Elderly Person's Housing(石安台耆英大廈) enjoy a quiet life. Since all of them live alone, they tend to bond together during most of their daytime hours. Their usual daily activities include watching satellite Chinese television programs, playing chess and other social gatherings. These activities occur in the community room which is located on the second floor of the building. Occasionally, residents will group together and venture out shopping for groceries and dim-sum in Chinatown area. Although most of their time are spent indoors, an activity some of the more energetic residents would like to do during summer is to tend a vegetable garden by the fence of the Chinese United Church next door.

Appendix 7.4

WINNIPEG CLIMATE CONDITIONS

Winnipeg has a "Continental" type climate, with temperatures varying over a wide extremes through the year. The normal temperature curve is at its lowest (-18.3°C) during the period January 17-27 and its highest (19.8°C) from July 19-27.

The average date of last frost (0°C or less) in spring is May 25 and the first frost in fall is September 21 giving an average frost free period of 118 days. The average period during which Winnipeg is free from killing frost (-1.4°C) is 131 days.

The average date of the break-up of the Red River is April 9 and the average date of freeze-up, November 16.

July normally has the most bright sunshine (321.7 hours) and December the least (98.6 hours).

Winds predominate most of the year from a southerly direction, as air flow is funneled down the Red River; but during winter months the prevailing direction shifts to northwesterly. April is the windiest months.

Winter snowfall averages 114.7 cm (45.2 inches). Precipitation averages 404.3 mm (19.87 inches) annually. Most of this precipitation falls as heavy showers during the summer months of April to October.

Thunderstorm activity reaches a peak during July, but hail is frequent.

CLIMATE
Winnipeg, Manitoba
50°N Latitude

	J	F	M	A	M	J	J	A	S	O	N	D
AVERAGE MEAN °C	-18.3	-15.1	7.0	3.8	11.6	16.9	19.8	18.3	12.4	5.7	-4.7	-14.6
TEMPERATURE °F	-1.0	4.82	19.4	38.8	52.9	62.4	67.6	64.9	54.3	42.3	23.5	5.72
AVERAGE TOTAL mm	19.3	14.8	23.1	35.9	59.8	83.8	72.0	75.3	51.3	29.5	21.2	18.6
PRECIPITATION in	0.76	0.58	0.90	1.41	2.35	3.30	2.83	2.96	2.02	1.16	0.84	0.73
AVERAGE TOTAL mm RAINFALL	0.3	0.4	5.9	26.4	57.8	83.8	72.0	75.3	50.9	24.6	5.3	1.6
AVERAGE TOTAL cm SNOWFALL	22.6	17.1	19.2	9.4	2.0	TR.	0.0	0.0	0.4	4.9	19.0	20.1
PREVAILING WIND DIRECTION	NW	NW	NW	N	N	S	S	S	S	S	NW	S

SUN ANGLE
Winnipeg, Manitoba
50°N Latitude

AZIMUTH

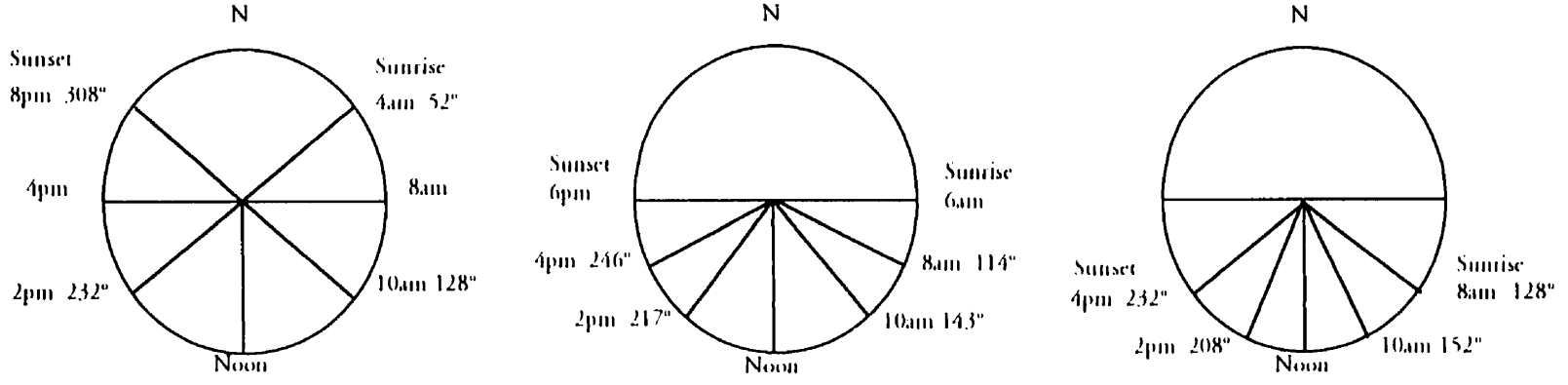

ALTITUDE

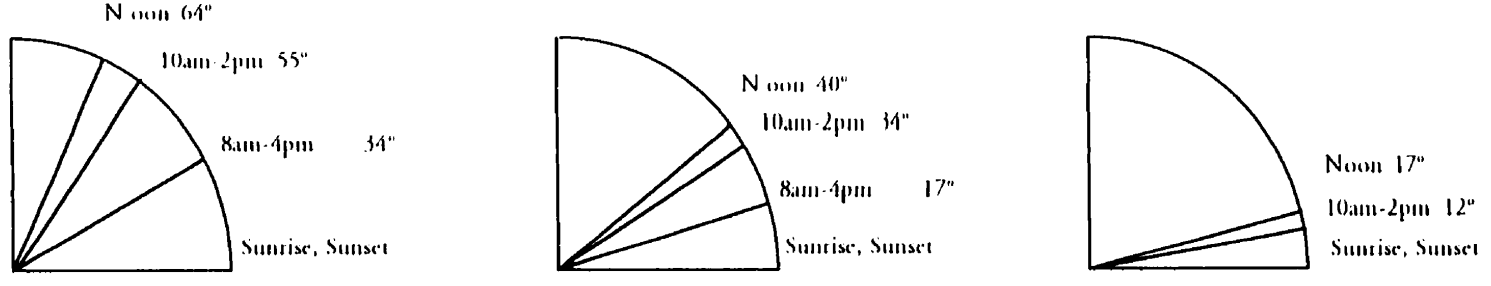

SUMMER SPRING / FALL WINTER

Appendix 7.5
CHINESE GARDEN STRUCTURES

Xuan (軒)— The Gazebos

Xuan or gazebo is a lofty place for meditation. It is usually fenestrated on all sides. Screen and lattices are in place of windows that permits a semi-private environment inside the structure. The interior is usually occupied by a sitting platform which is by itself multi-functional. It could be for sitting, eating, meditating, studying and sleeping.

Ting (亭)— The Pavilion

Ting or pavilion is perhaps the most versatile, distinguishable and ubiquitous structure in a Chinese garden. The word *Ting* which originated from a Chinese word meaning stop clearly define its function as a rest stop. Its light and open character can easily be adapted into all sorts of garden settings while at the same time providing a sheltered viewing spot that commands views in all directions.

Lang (廊)— The Pergola

In a Chinese garden, *Lang* or verandah acts as both the guiding pathway and the primary connection between different structures. It also serves as a space defining device. While dividing, it ties different garden sections by its open and unobstructed character. Liang is a long, usually crooked structure that is designed to follow the undulating landscape or adheres to the contour that rises or drops on hills. It can be a free standing structure, attached to a wall or to a building, or sometimes with a wall built along its center line. Small openings that take the shape of a crescent moon, fan or sometimes terra-cotta patterns decorated with curved roof-tiles are commonly used on these walls to tie separated spaces together.

Appendix 7.6
CONSTRUCTION METHODS

The construction of the roof garden for Sek On Tai Elderly Person's Housing is a challenging undertaking. Not only it has a number of architectural and technical restraints, the distinguish timber frame structure and the extensive use of mortise and tenon joineries in the structural framework requires top quality carpentership in the construction of the roof garden. It is when the garden structures are well put together to reveal the transformed barren roof space into an "Oasis in the Sky."

Due to the limited roof space and the special building procedure required by a typical timber frame structure, the construction process will be divided into two phases, an off-site phase and an on-site phase. The off-site phase starts with the selection of the best quality of timber for the project. This should be carried out in advance to allow seasoning of the timber. The next step is to cut the timber to size as specified. This is followed by preparing all the necessary joineries as required. The prepared wood pieces are then put together to check for accuracy. After all the component pieces are inspected, they are transported to the site for assembling.

The on-site phase is typically a fitting of all components together in a well planned and coordinated manner. The order of the construction of the roof garden is as follow.

- construct the foundation grid system
- laying the joists and decking for the garden deck
- assemble the beam and supporting column structures of pavilions, gazebo and pergolas
- complete the roof for the pavilions and gazebo
- complete the rafters for the pergolas
- build the sitting platforms for the pavilions
- finish the partitions for the pavilions
- build the bench for the gazebo
- build planters for different areas

Appendix 7.7
WEIGHT OF GARDEN STRUCTURE

Components	Size (in.)	Total Length (ft.)*	Board Feet*
Garden Deck			
Beam	8 x 7	807.5	314
Joist	5 x 4	936	130
Decking	2 x 4	5919	329
			total 773
Pavilion / Gazebo			
Column	8 x 8	367.5	163.4
Principal Rafter	4 x 6	150	25.5
Common Rafter	2 x 6	864	72
Roof Sheathing	1 x 4	3720	34
Plate Beam	6 x 8	175	58.3
			total 353.2
Sitting Platform			
Beam	6 x 6	77	19.25
joist	5 x 4	140	19.5
deck	2 x 4	900	16.7
			total 55.45
Pergola			
Column	6 x 6	424	106
Rafter 1	4 x 4	162.5	26.7
Rafter 2	2 x 2	1285	35.7
Cross Beam	4 x 6	214.5	35.8
Kingpost	4 x 4	27.5	3
Plate Beam	4 x 6	375	62.6
			total 269.8

*These are estimate figures.

Total Board Feet: 1451.45*
Total weight: 63,863.8 lb (assume oak weight 44 lb./ B.F.)
Total Load on Roof over 3,000 square feet: 21.29 psf

Appendix 7.8
MAINTENANCE

The exclusive use of oak as the building material and the unique construction method makes the garden structure stand out among its surroundings. Yet the full enjoyment of the garden could only be realized by proper care and regular maintenance of the garden structure. Although oak is a very durable material, this maintenance procedure should not be overlooked. To this end, the garden structure should be checked for shrinkage, cracks, and any signs of damage due to weathering regularly. Prompt repairs should be made by a skilled carpenter upon discovery of any damage on the structure.

In addition to the regular maintenance of the garden structure, the proper drainage of roof deck should also be included in this maintenance procedure. Although the entire roof deck is covered by the garden structure, garbage, plant materials and other objects could find their way into the crevices on or around the deck structure thus impeding the normal drainage rate. It is therefore important to keep the garden free of unwanted materials and advise the residents not to leave any garbage behind.

Appendix 7.9
PLANTING

Suggested Plant List

The design proposal does not provide a specific planting scheme but rather a recommendation of what type of plant species are suitable and could be adapted to the special growing conditions of the roof garden. The recommendation also consider plants that are easily be potted and transferred into indoor environment. Special preferences are made to include some Chinese favorites.

FOR SUN DECK PLANTERS AND POTS

Plant Names	Common Names	Habitat and Characteristics
Chrysanthemum spp.	Chrysanthemum	full sun, moist soil
Citrus spp.	Kumquat, Dwarf Orange	partial sun
Dahlia spp.	Dahlia	prefer full sun, bloom in shade
Fuchsia spp.	Fuchsia	partly shade
Hibiscus spp.	Hibiscus	full sun, heat, well drain soil
Impatiens spp.	Impatience	partial sun, rich and sandy soil
Paeonia spp.	Peony	full sun
Pelargonium spp.	Geranium	full or partial sun, regular soil
Petunia spp	Petunia	full sun,
Trachelospermum spp.	Jasmine	full to partial sun

For Pergola Planters - Vines and Creepers

Plant Names	Common Names	Habitat and Characteristics
Actinidia Kolomikta	Arctic Beauty Kiwi	partial shade, rich, well drain soil
Clematis spp.	Clematis	need cool roots, bloom best when shaded from hot afternoon sun
Lonicera x brownii	Honey Suckle	full sun, partial shade, moist soil
Vitus riparia	Wild Grapes	full to partial shade

For Vegetable Planters

Plant Names	Common Names	Habitat and Characteristics
Brassica spp.	Cabbage	full sun, fertile, moist, well drain soil
Cucumis spp.	Cucumber	full sun, fertile, moist, well drain soil
Cucurbita pepo	Zucchini	full sun, fertile, moist, well drain soil
Lycoperscion spp.	Tomato	full sun, fertile, moist, well drain soil
Solanum spp.	Egg Plant	full sun, fertile, moist, well drain soil

SOIL MIXTURE

A proper soil mixture is an important growth factor for plants to survive the relatively harsh roof top environment. An ideal soil mixture should be able to hold water and nutrients yet drains well. The recommended blend is 80% soil-less potting mix and 20% clean, loamy topsoil. Slow release fertilizer could be mixed with the soil when preparing for planting. Liquid feed is another alternative however it is always best to water first, before applying liquid fertilizer.

8 DESIGN DRAWINGS

A1.1	Exiting Site Plan	42
A1.2	Sun Path Study	43
A2.1	Proposed Site Plan	44
A2.2	Garden Deck Plan	45
A2.3	Axonometric View of Garden Structure	46
A2.4	Structural Arrangement	47
A2.5	Decking Framework	48
A2.6	East Elevation	49
A2.7	South Elevation	50
B1.1	Gazebo / Pavilion Detail	51
B1.2	Gazebo / Pavilion Assembly	52
B1.3	Gazebo / Pavilion Components	53
B1.4	Gazebo./ Pavilion Components	54
B2.1	Pergola Detail	55
B2.2	Pergola assembly	56
B2.3	Pergola Components	57
B2.4	Pergola Components	58
B3.1	Gazebo Detail / Decking Assembly	59
B3.2	Seating / Planting Detail	60

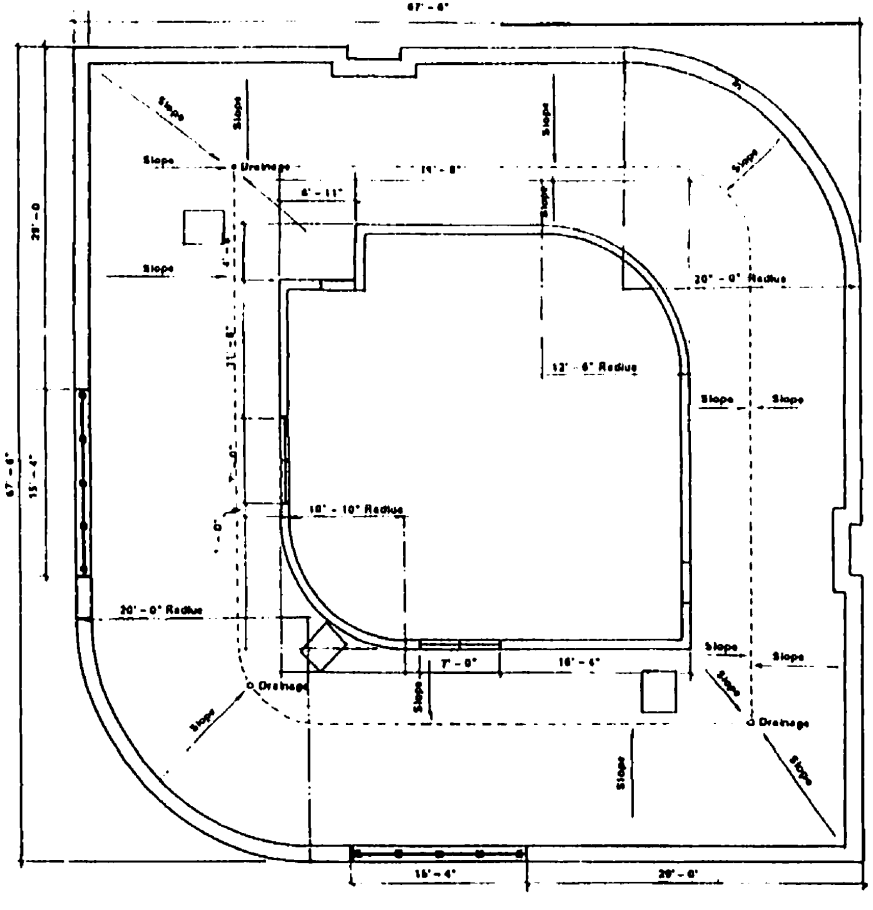

EXISTING SITE PLAN

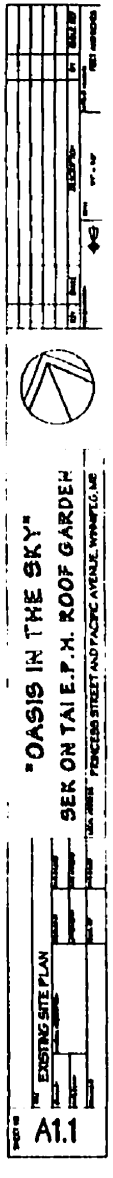

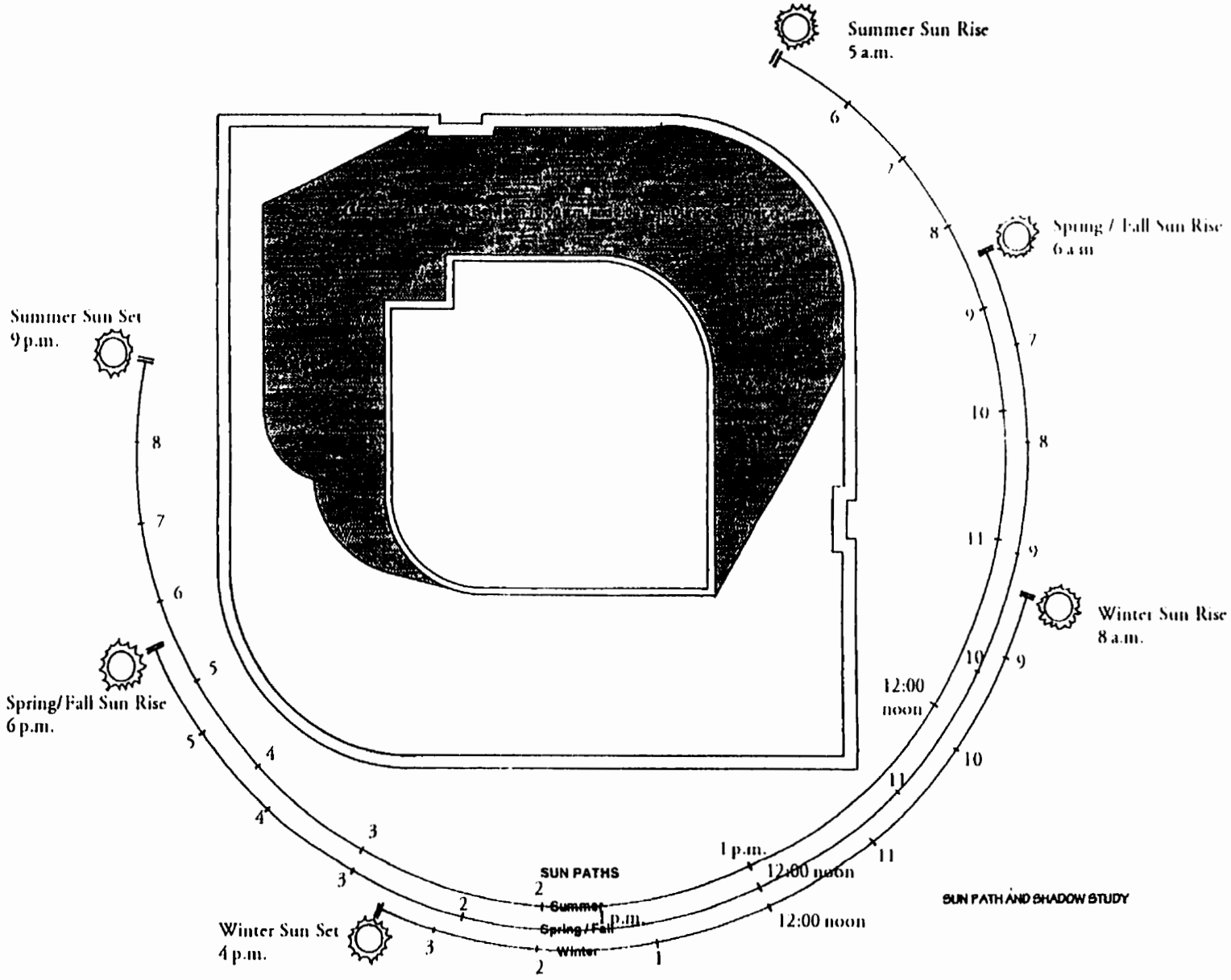

"OASIS IN THE SKY"
SEK ON TAI E.P.H. ROOF GARDEN
PRINCESS STREET AND PACIFIC AVENUE, WINNIPEG MB

SUN PATH AND SHADOW STUDY

A1.2

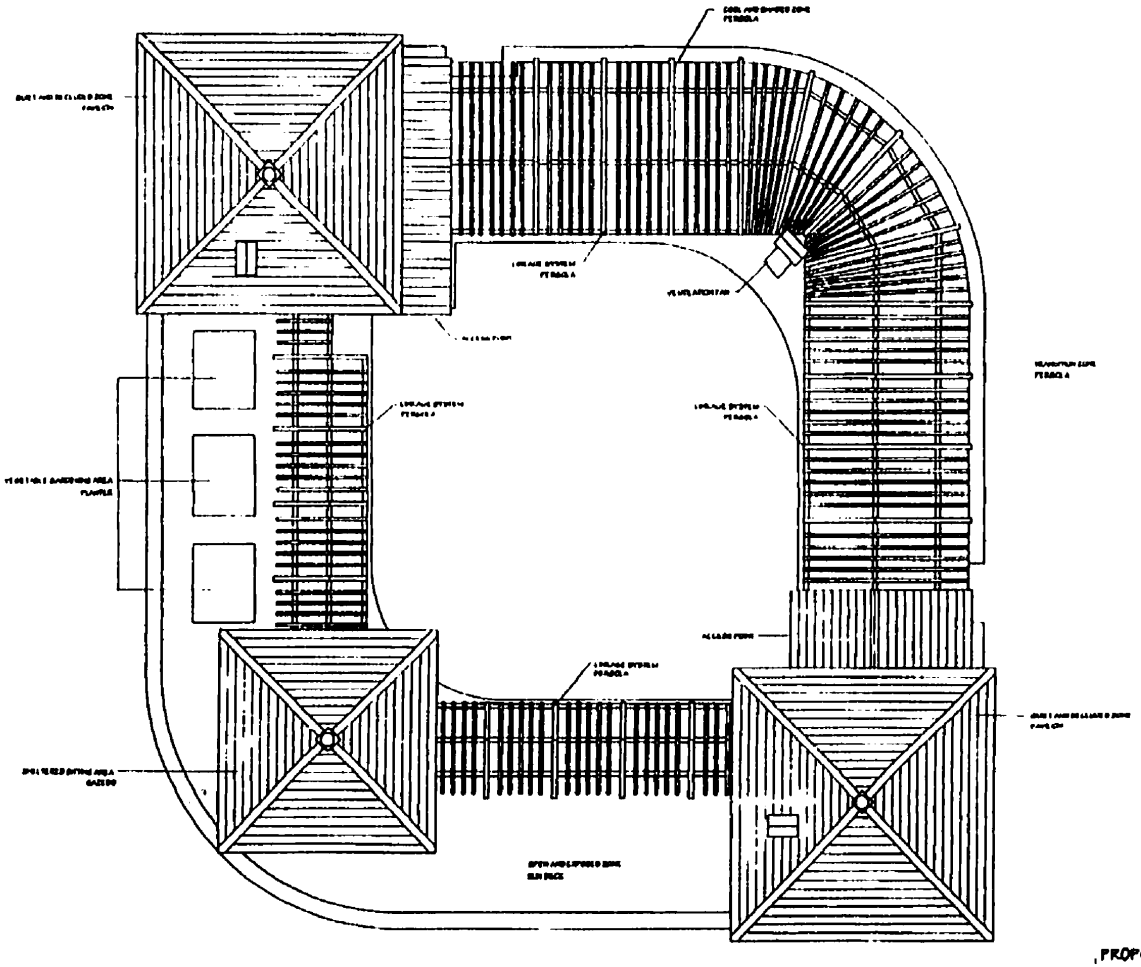

PROPOSED SITE PLAN

"OASIS IN THE SKY"
SEX ON TAI E.F.H. ROOF GARDEN
PRINCESS STREET AND PACIFIC AVENUE, WINNIPEG, MB

PROPOSED SITE PLAN

A2.1

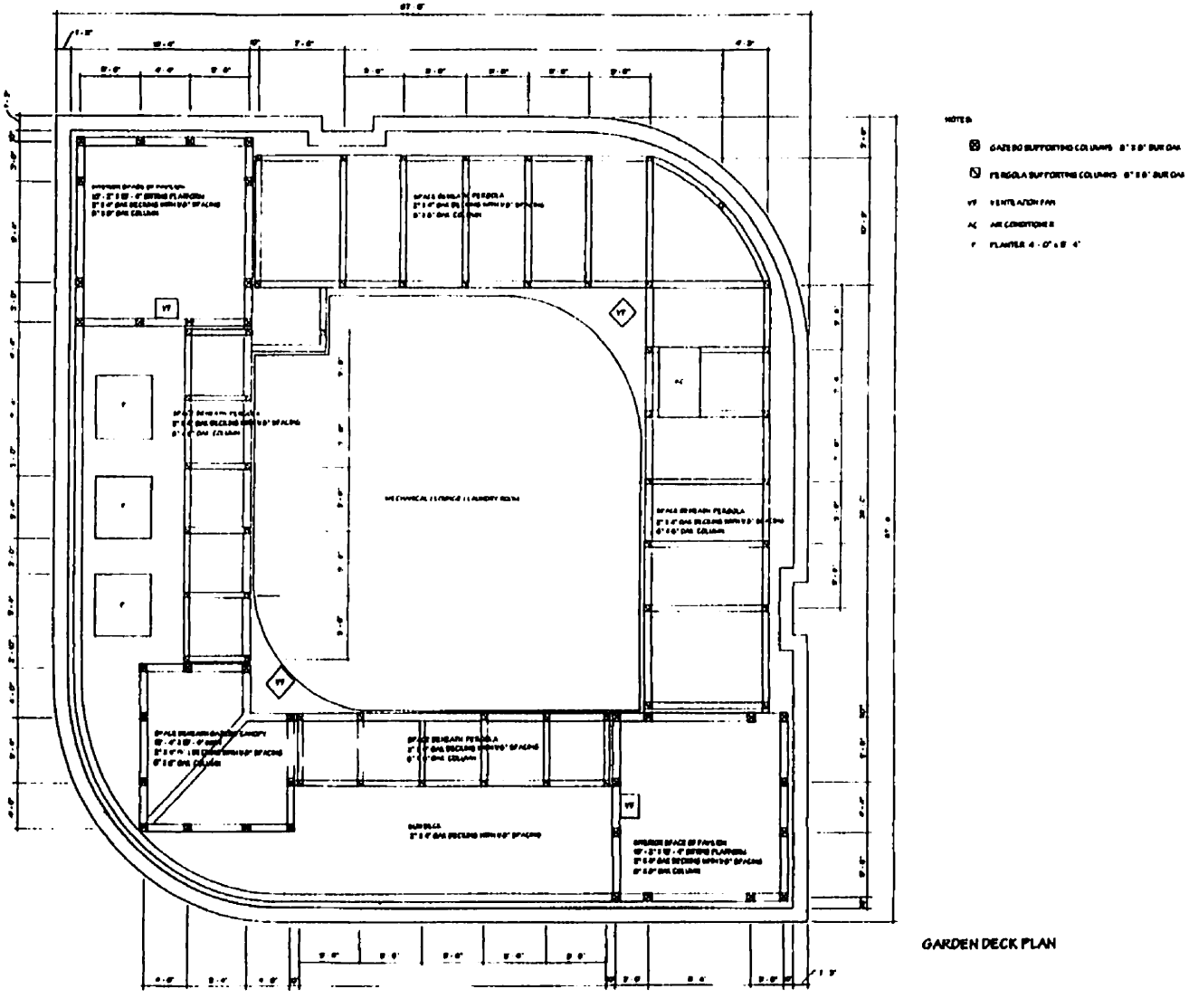

GARDEN DECK PLAN

"OASIS IN THE SKY"
SEK ON TAI E.P.H. ROOF GARDEN
PRINCESS STREET AND PACIFIC AVENUE, WINNIPEG, MB

GARDEN DECK PLAN

A2.2

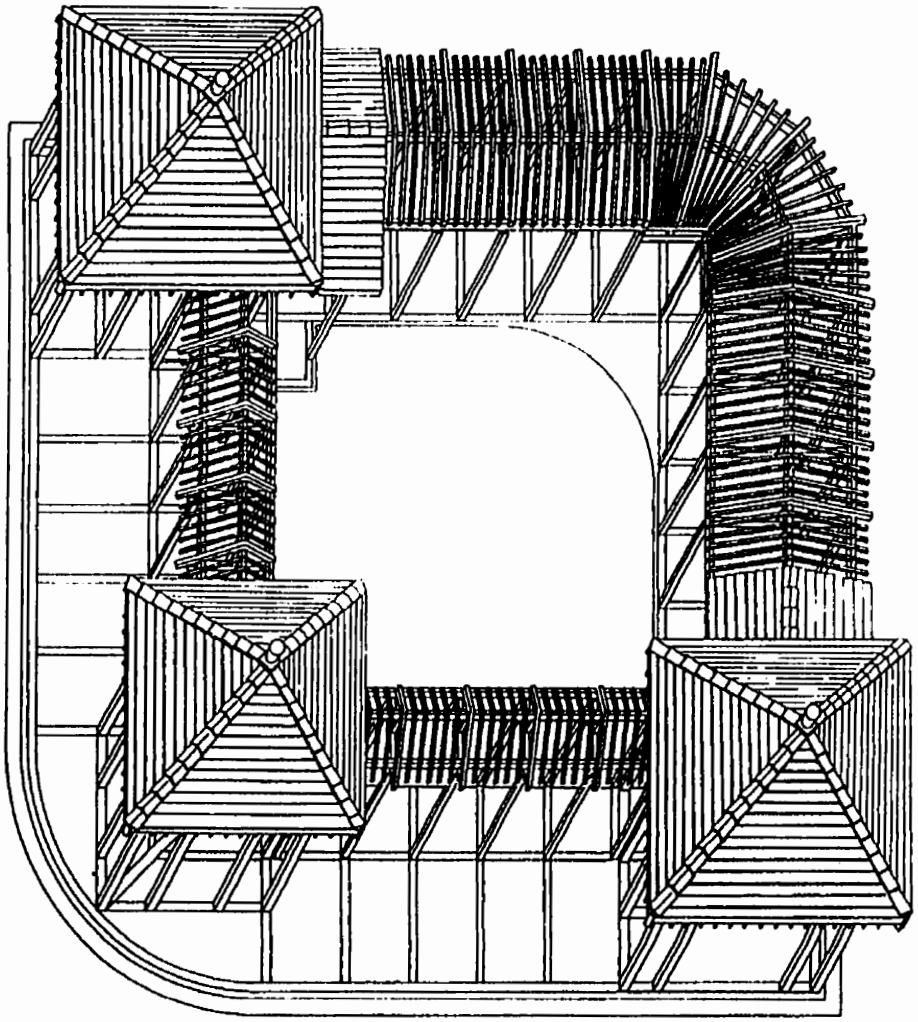

AXONOMETRIC VIEW OF
GARDEN STRUCTURE

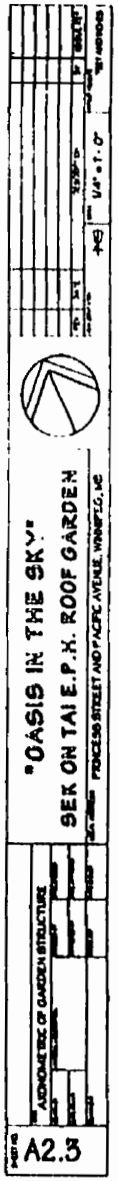

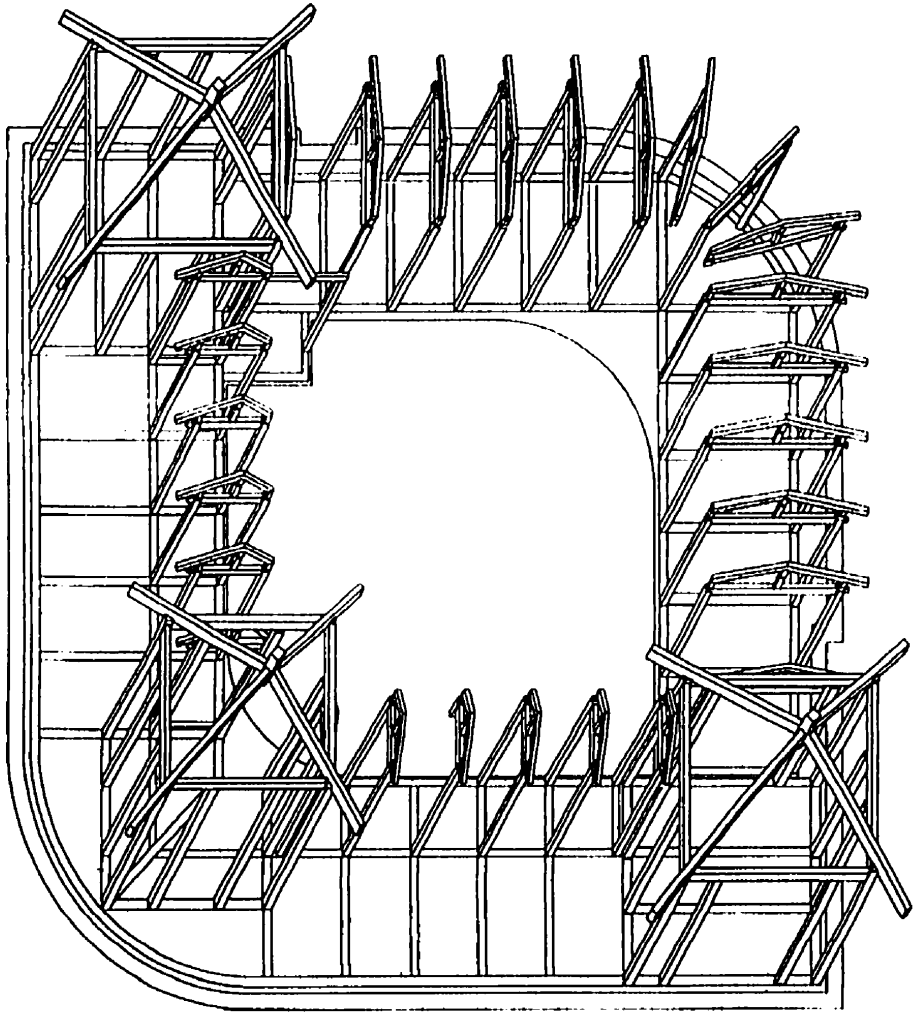

STRUCTURAL ARRANGEMENT

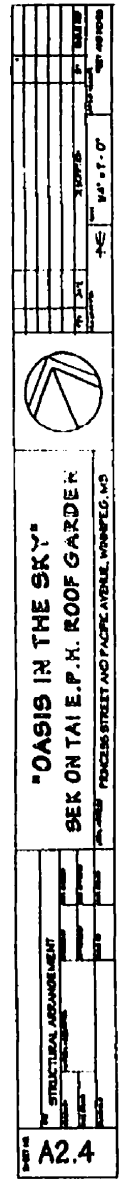

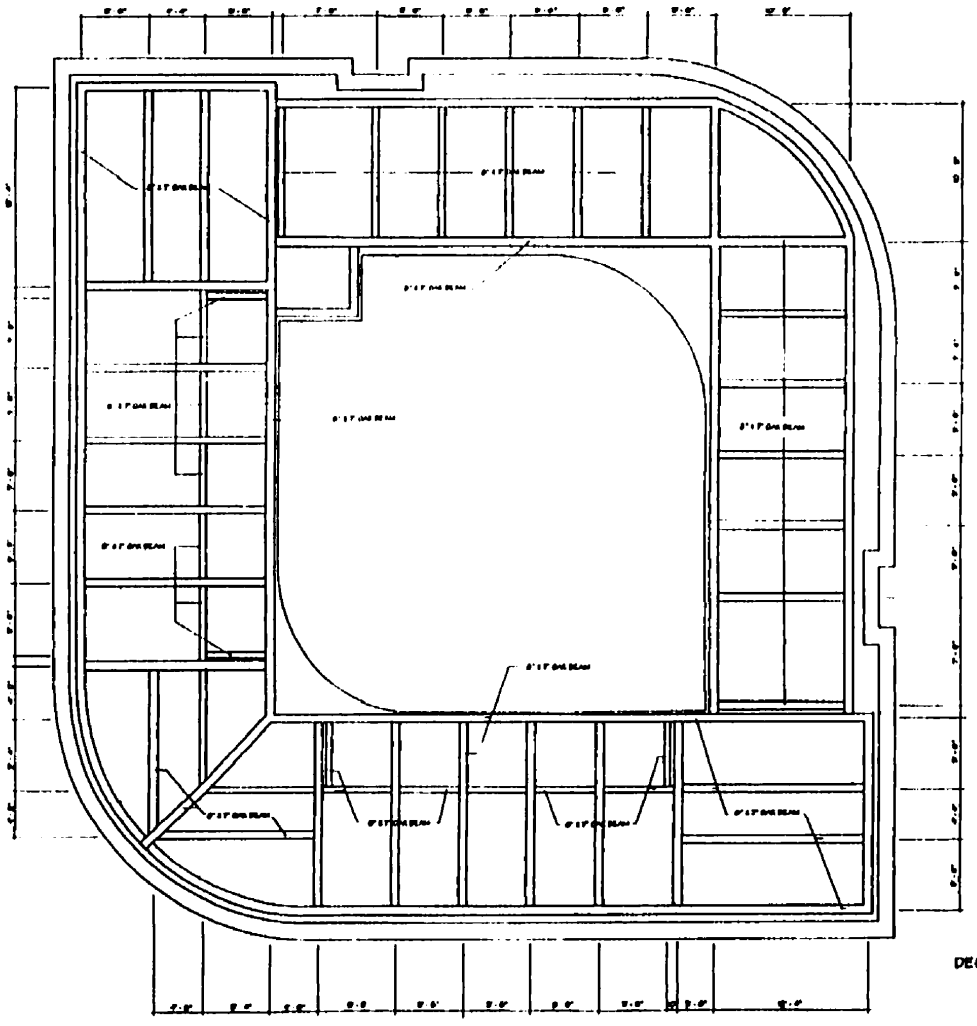

DECKING FRAMEWORK

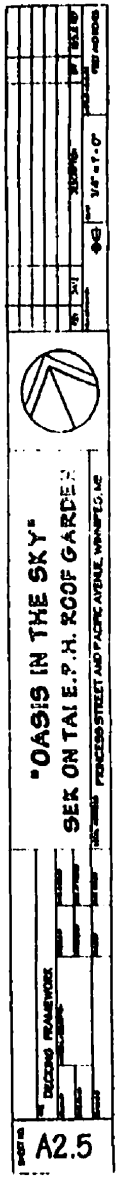

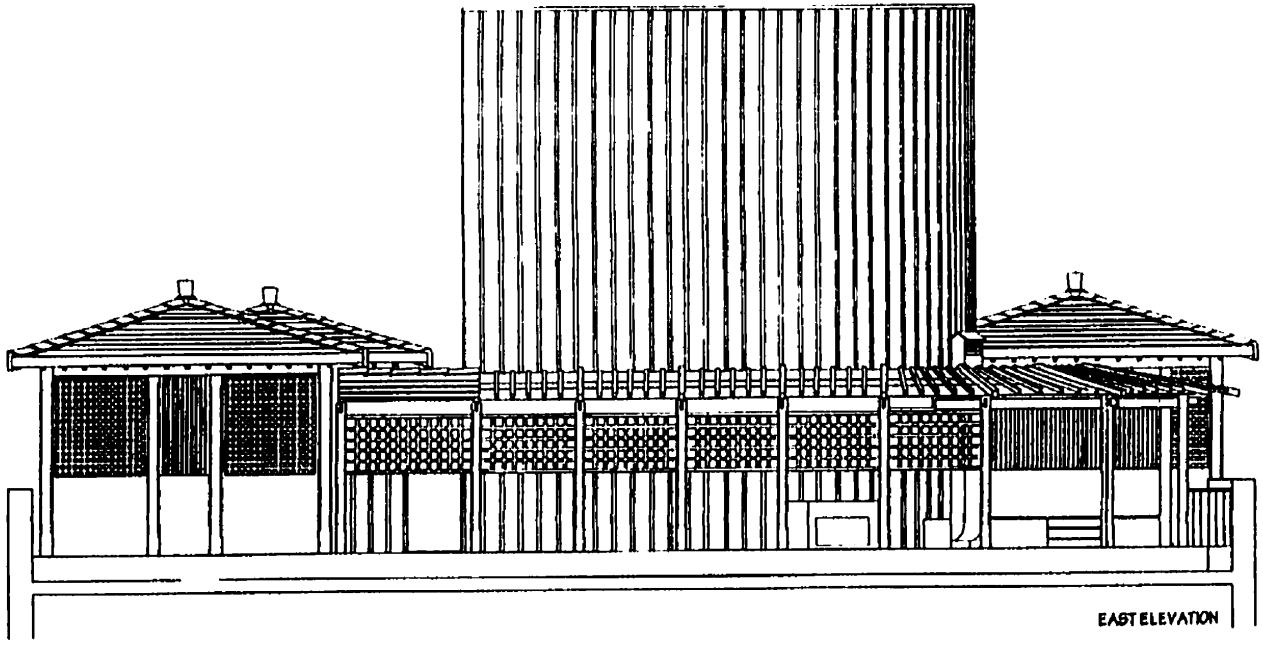

"OASIS IN THE SKY"
SEK ON TAI E.P.H. ROOF GARDEN
PRINCESS STREET AND PACIFIC AVENUE, WINNIPEG, MB

EAST ELEVATION

A2.6

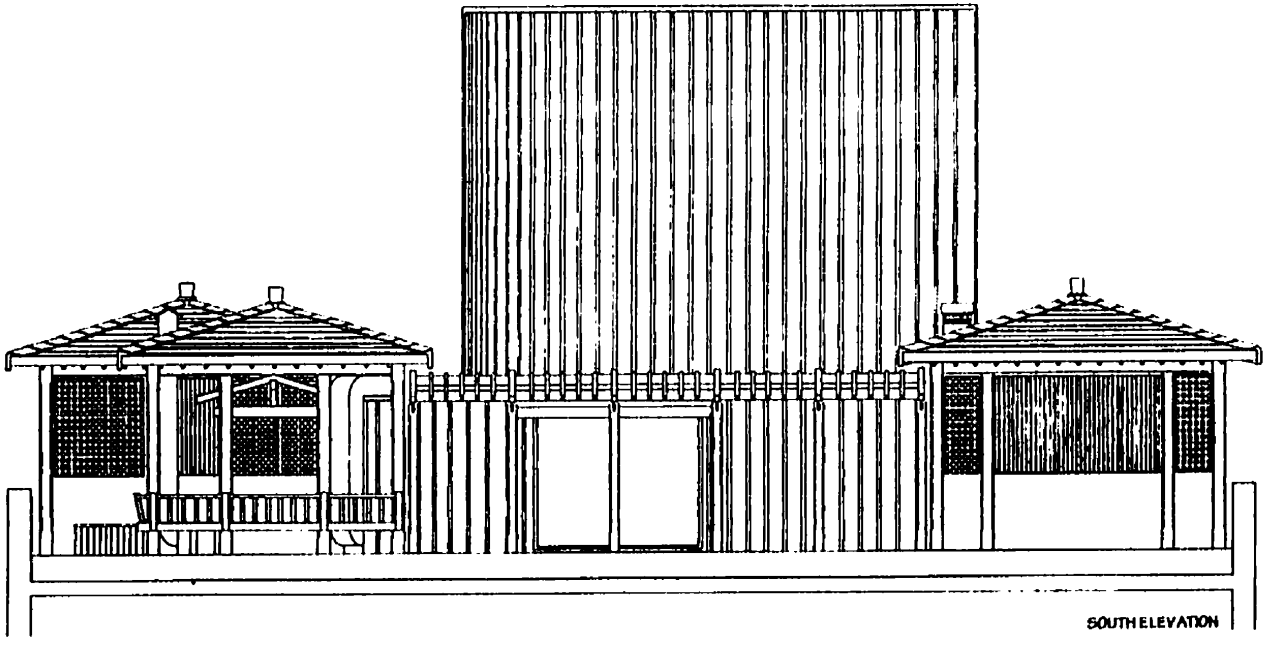
SOUTH ELEVATION

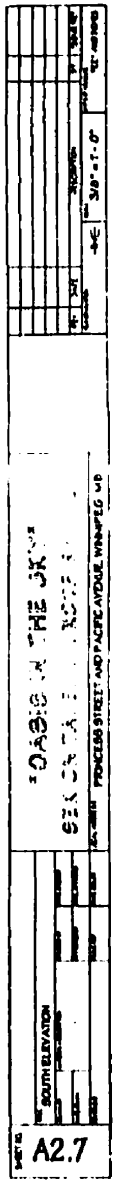
SOUTH ELEVATION
A2.7

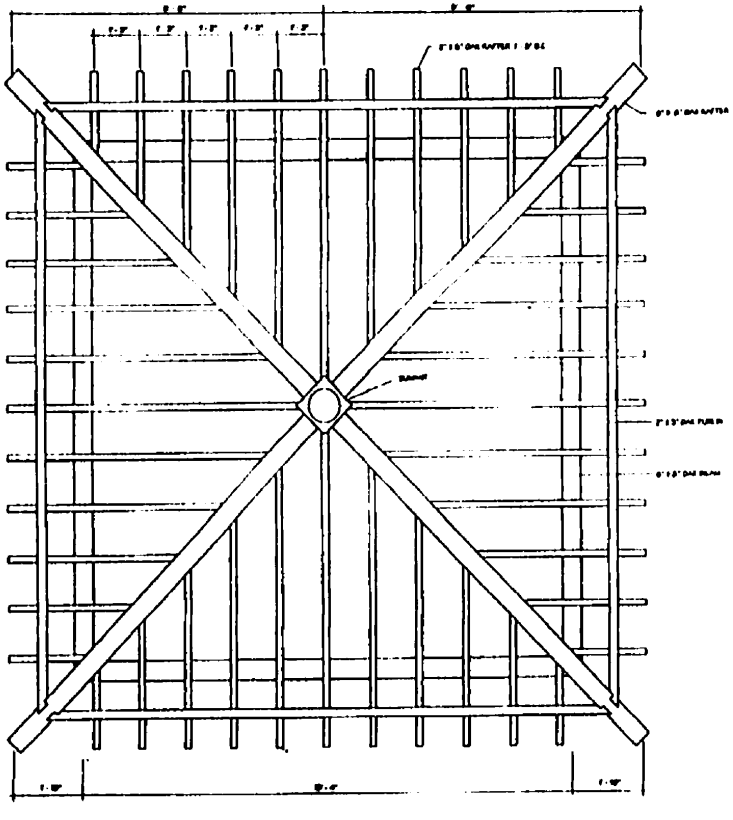

RAFTER ARRANGEMENT

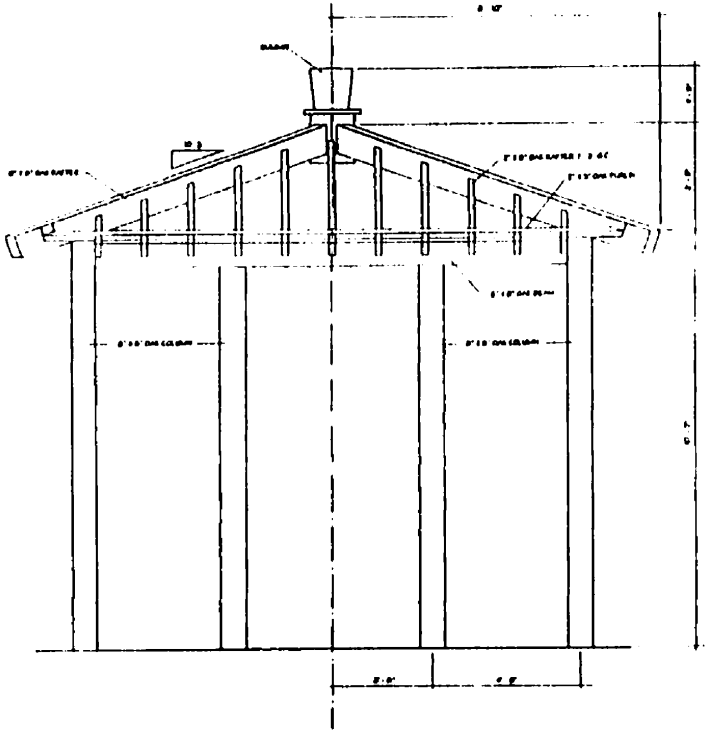

SIDE VIEW

"OASIS IN THE SKY"

SEK ON TAI E.P.H. ROOF GARDEN

PRINCESS STREET AND PACIFIC AVENUE, WINNIPEG MB

GAZEBO / PAVILION DETAIL

B1.1

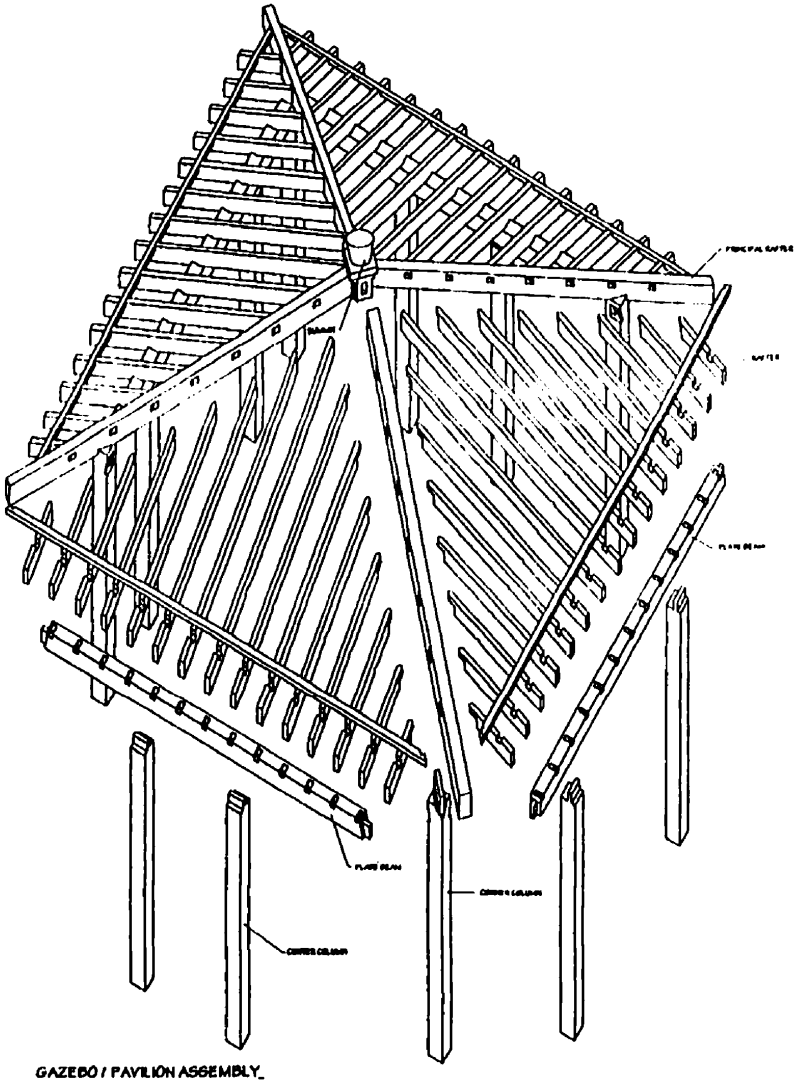

GAZEBO / PAVILION ASSEMBLY_

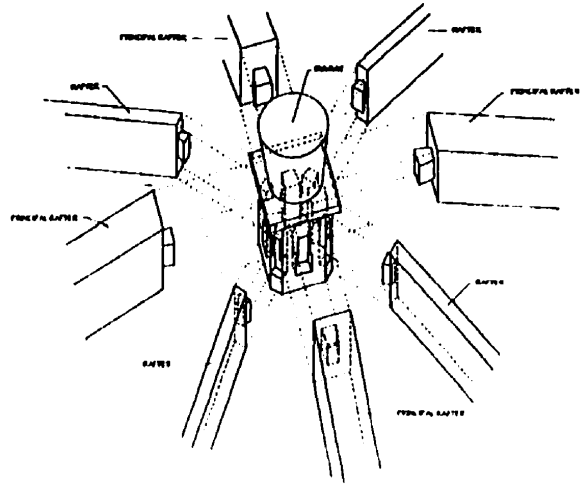

SUMMIT ASSEMBLY

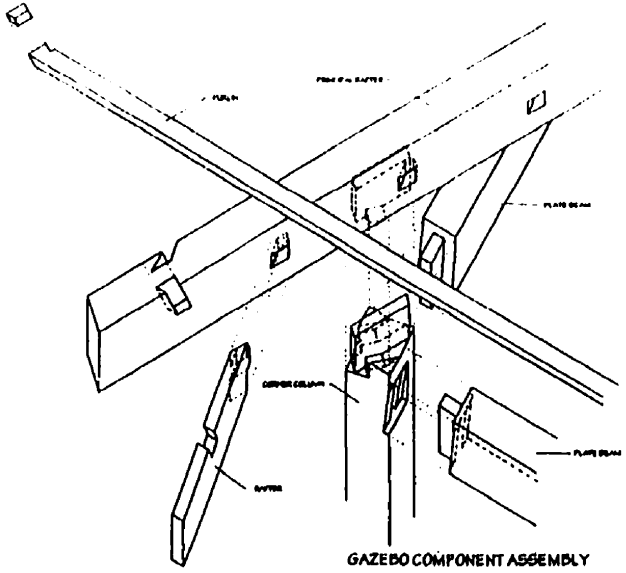

GAZEBO COMPONENT ASSEMBLY

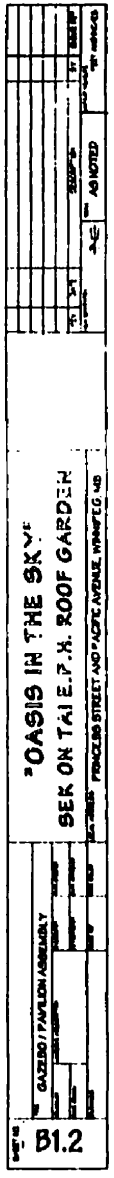

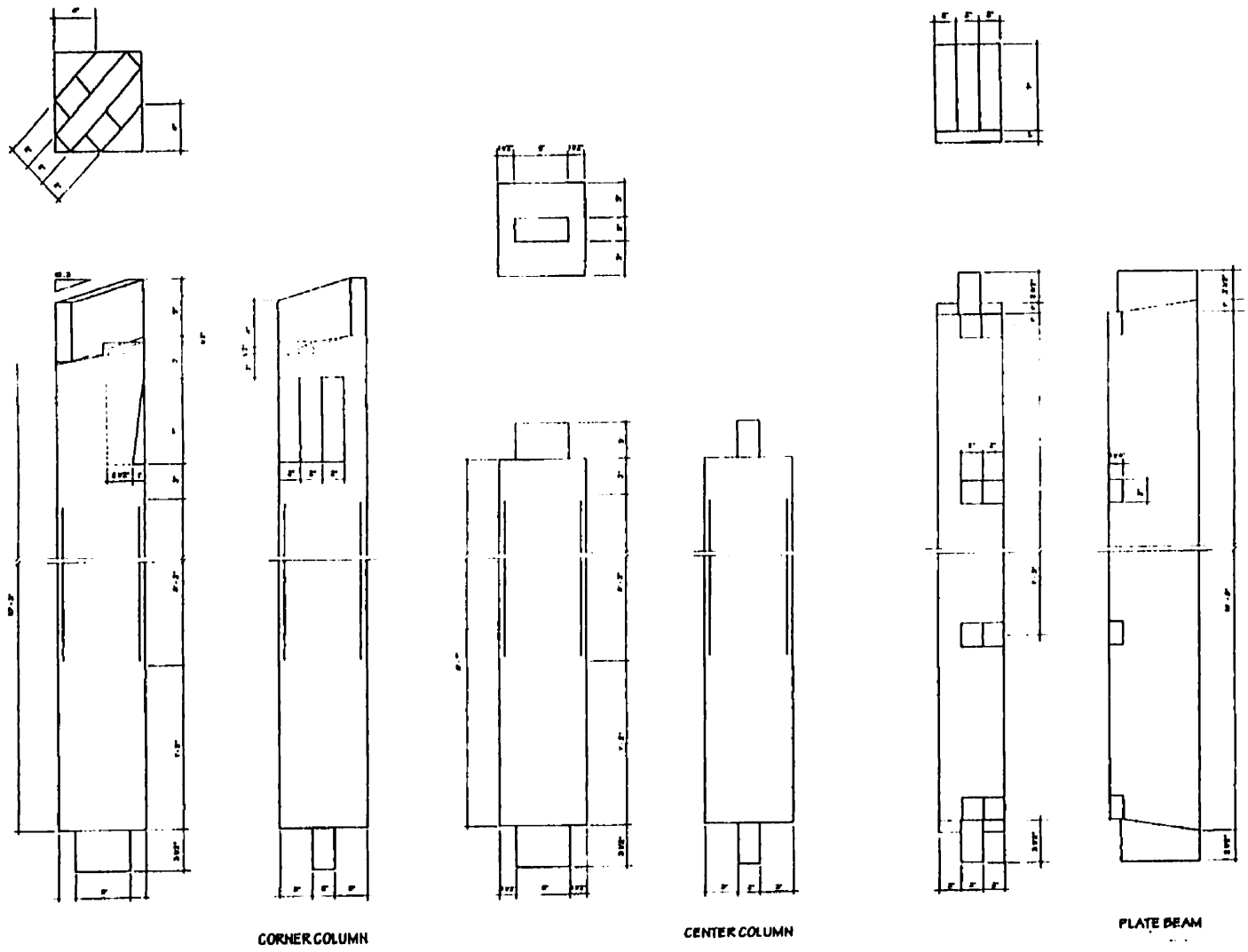
CORNER COLUMN
CENTER COLUMN
PLATE BEAM
"OASIS IN THE SKY"
SEK ON TAI E.P.H. ROOF GARDEN
B1.3

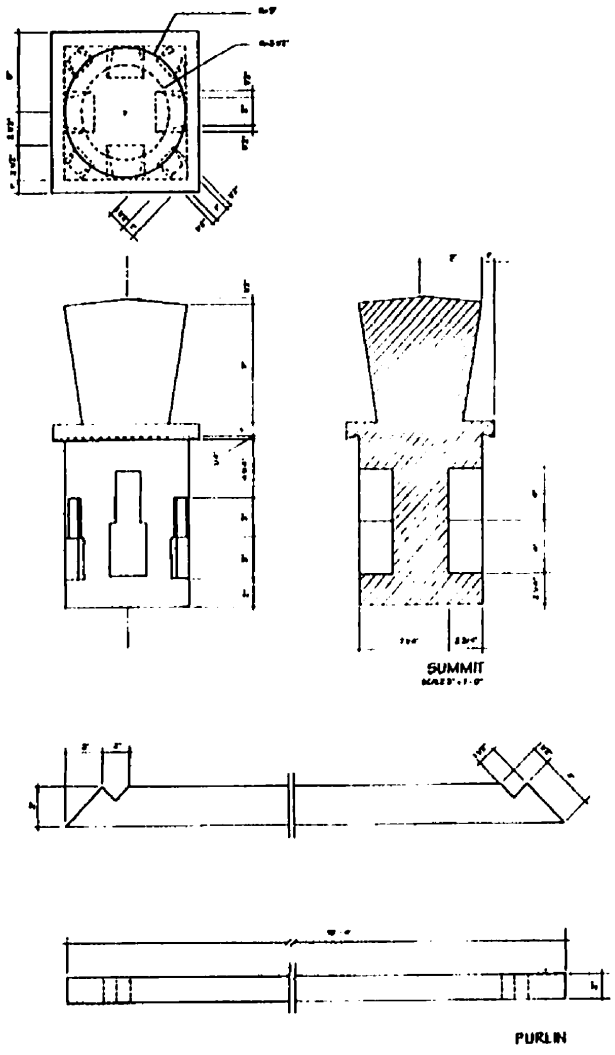
SUMMIT
PURLIN

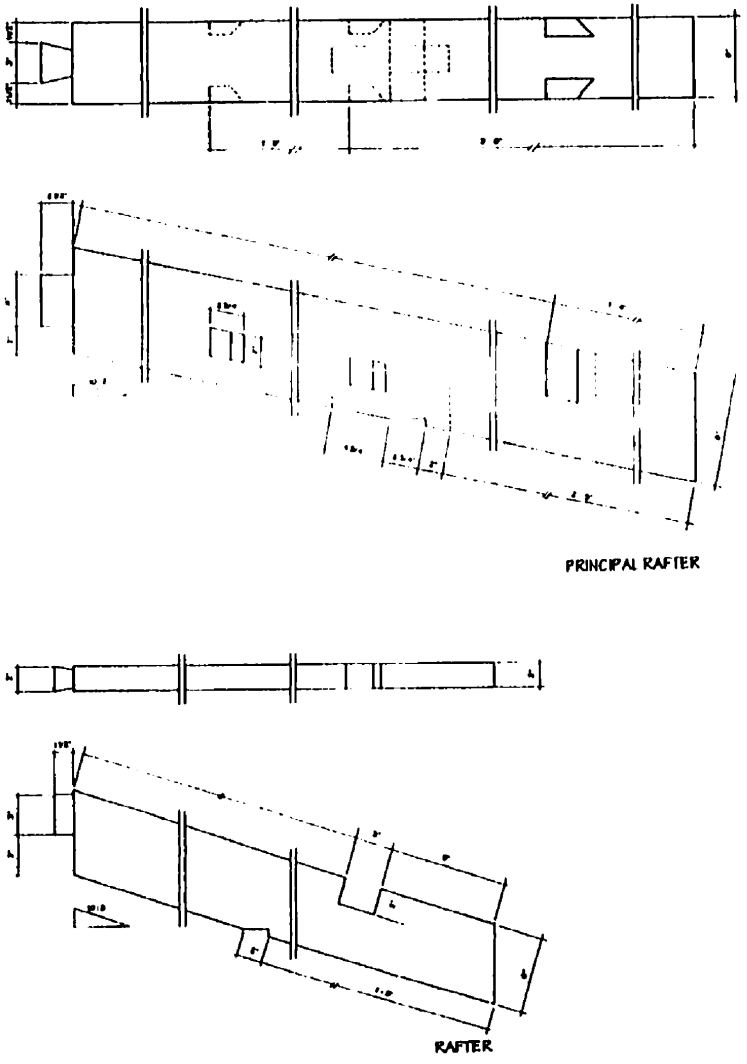
PRINCIPAL RAFTER
RAFTER

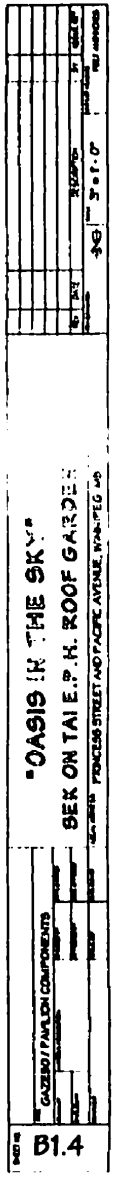
GAZEBO / PAVILION COMPONENTS
SEK ON TAI E.P.H. ROOF GARDEN
B1.4

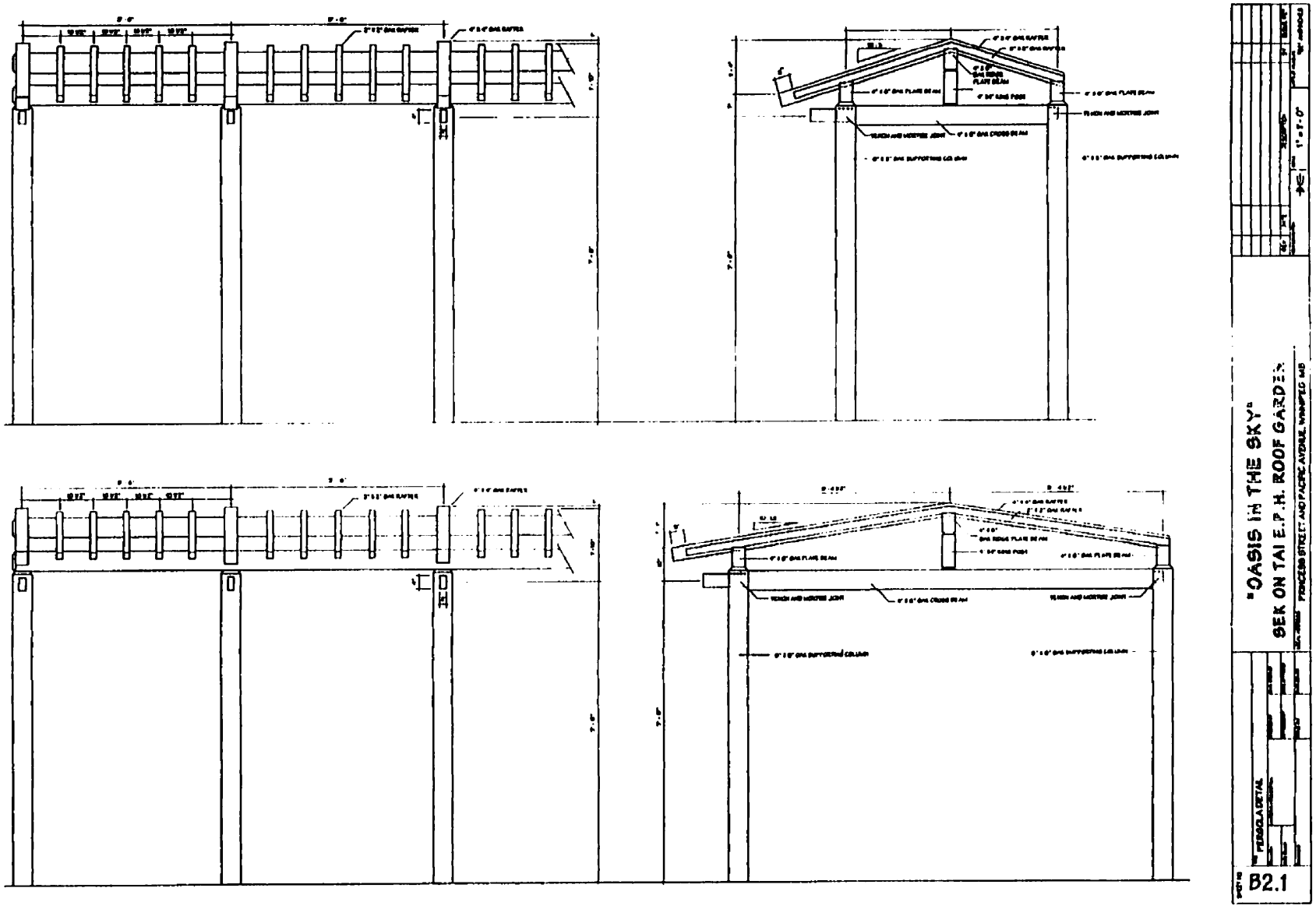
"OASIS IN THE SKY"
SEK ON TAI E.F.H. ROOF GARDEN
PERGOLA DETAIL
B2.1

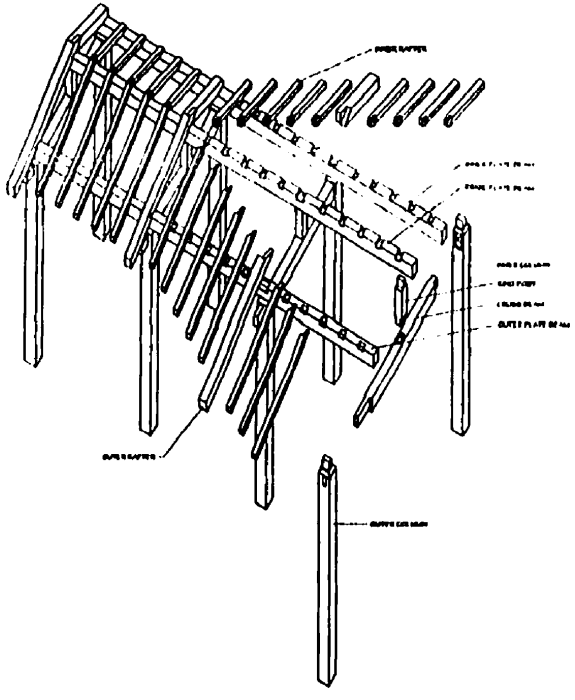

PERGOLA ASSEMBLY

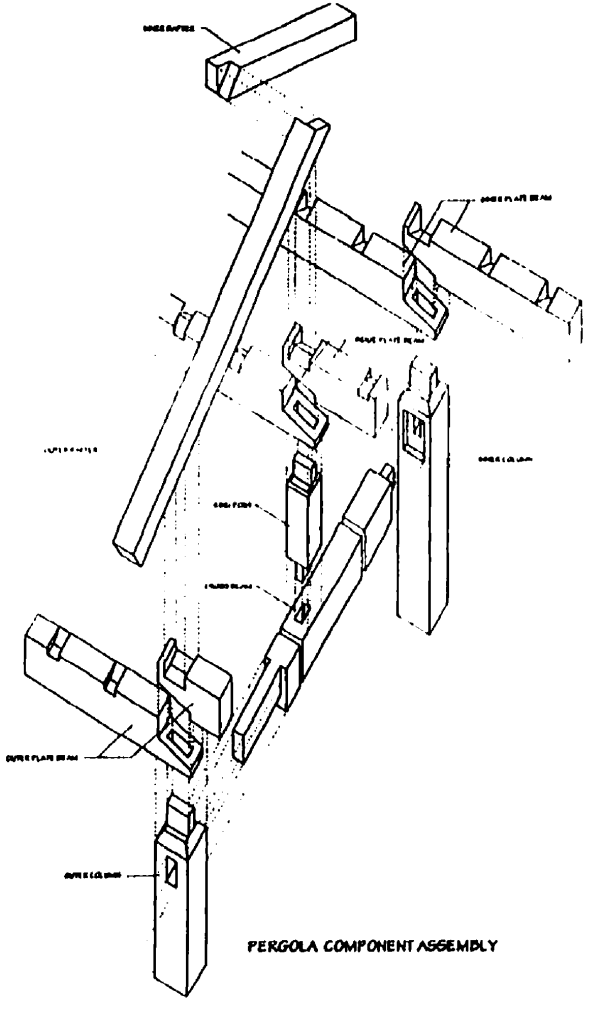

PERGOLA COMPONENT ASSEMBLY

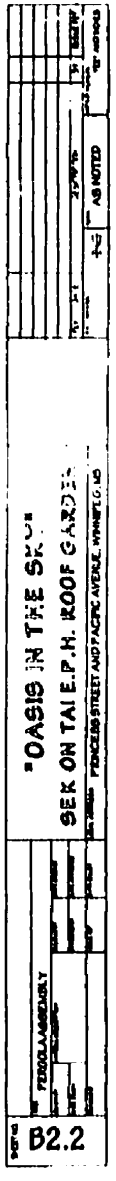

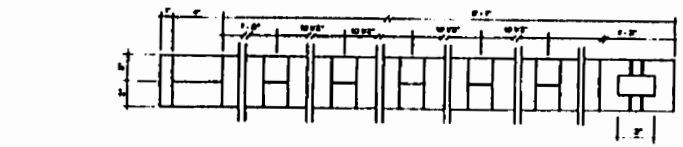

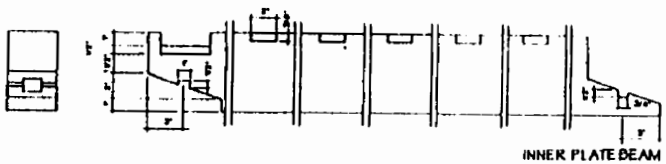

INNER PLATE BEAM

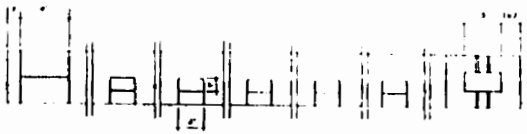

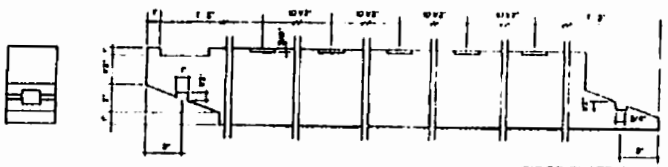

RIDGE PLATE BEAM

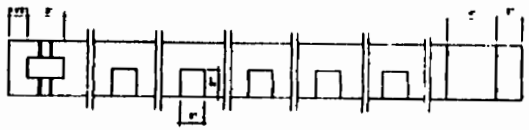

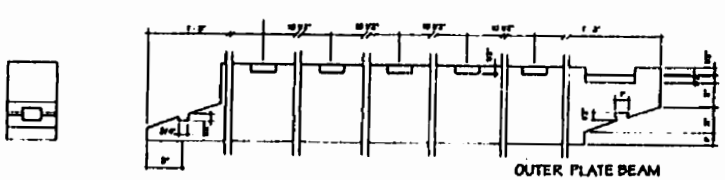

OUTER PLATE BEAM

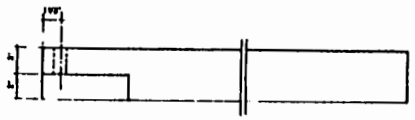

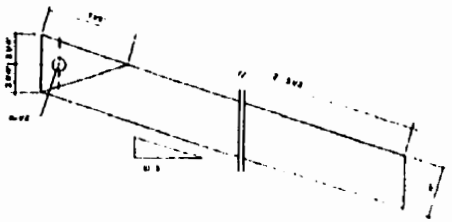

INNER RAFTER 1

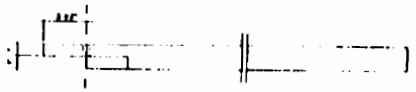

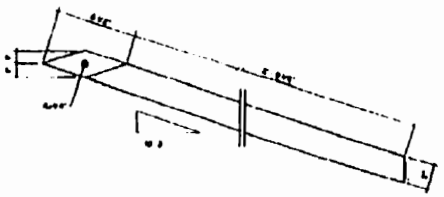

INNER RAFTER 2

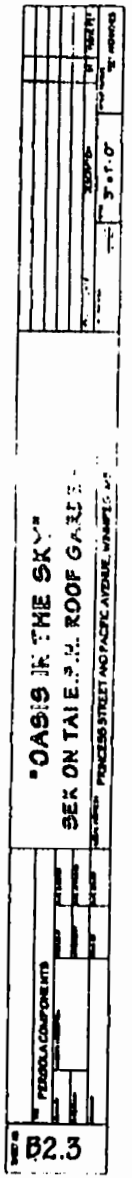

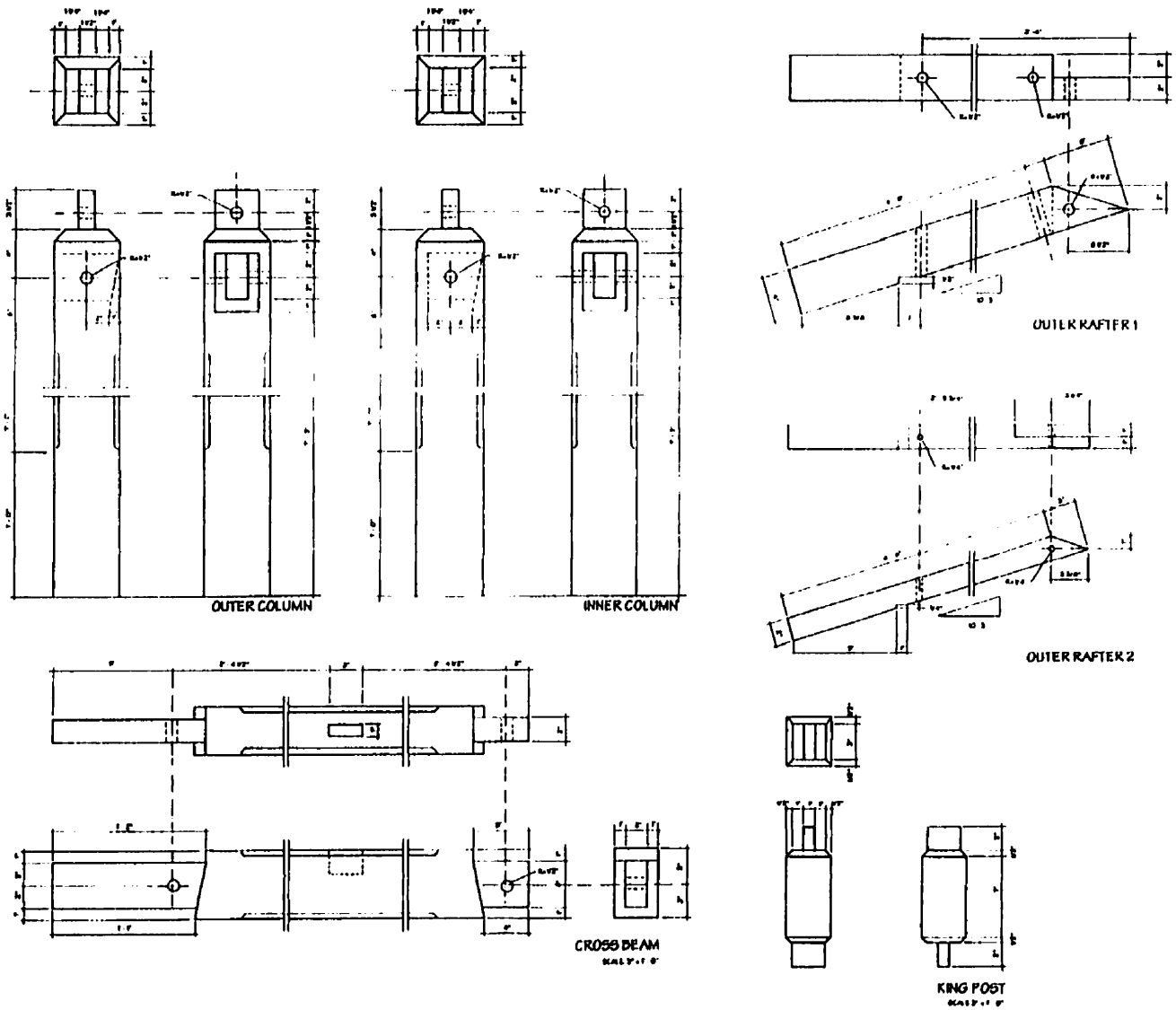

"OASIS IN THE SKY"
SEK ON TAI E.P.H. ROOF GARDEN
PERGOLA COMPONENTS
B2.4

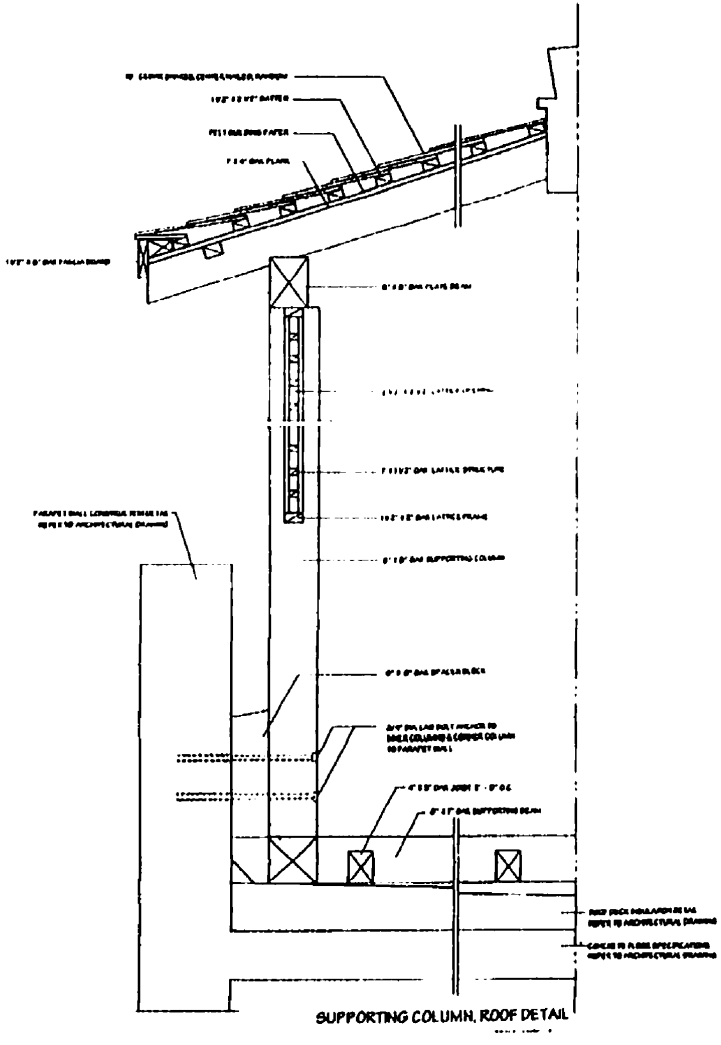

SUPPORTING COLUMN, ROOF DETAIL

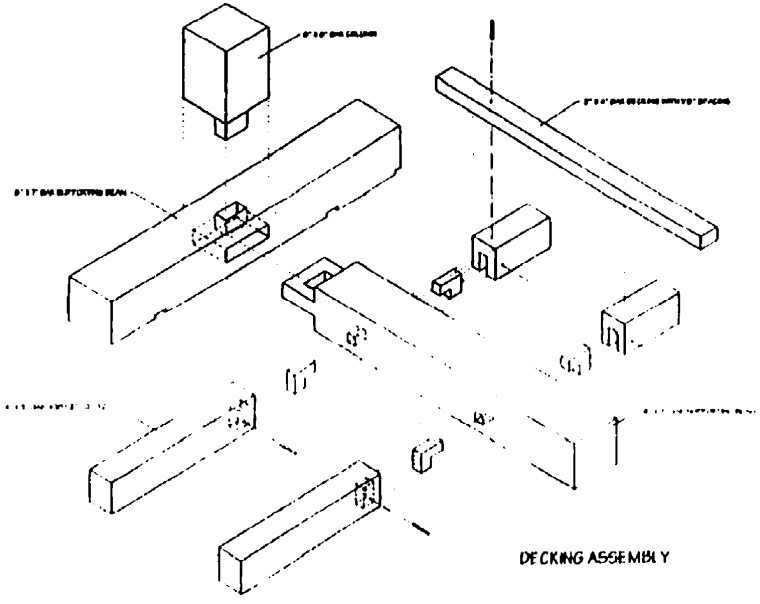

DECKING ASSEMBLY

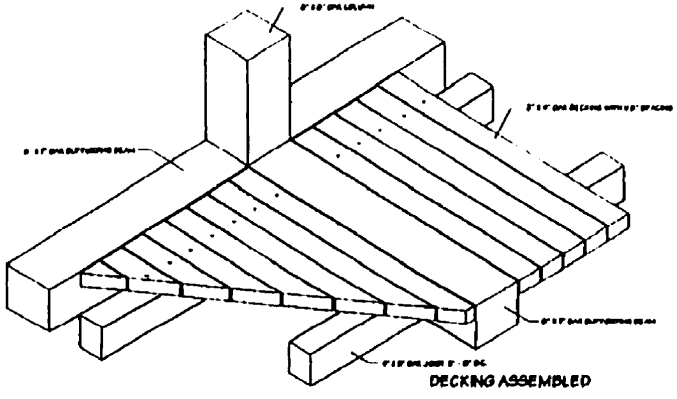

DECKING ASSEMBLED

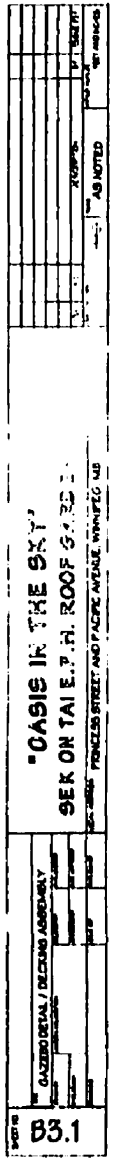

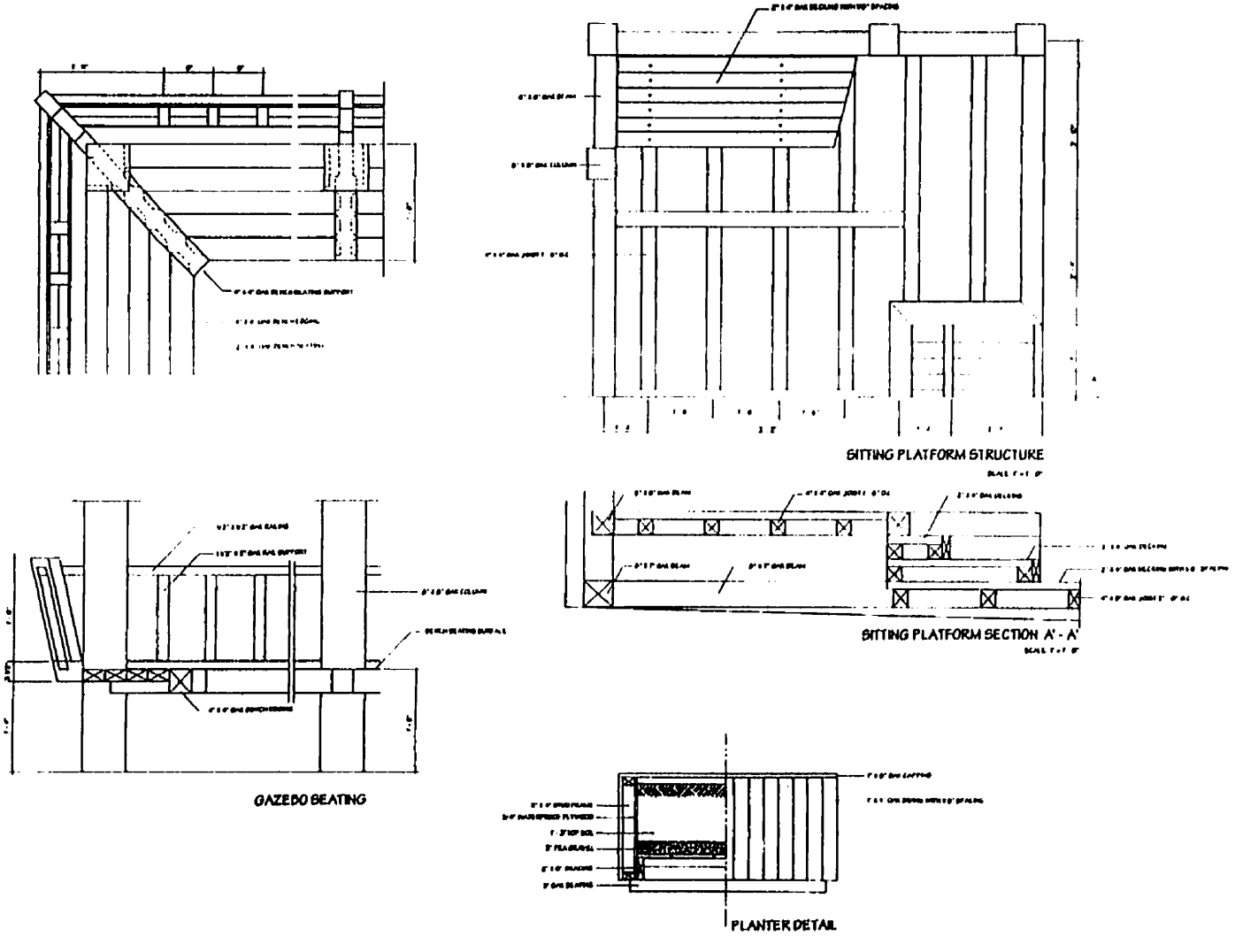
SITTING PLATFORM STRUCTURE
SITTING PLATFORM SECTION A' - A'
GAZEBO SEATING
PLANTER DETAIL
"OASIS IN THE SKY"
SEK ON TAI E.P.H. ROOF GARDEN
PRINCESS STREET AND PACIFIC AVENUE, WINNIPEG, MB
AS NOTED
SEATING / PLANTER DETAIL
B3.2

BIBLIOGRAPHY

"190 Marlborough Street Roof Garden", *Landscape Architecture,* 78(7):53-55, 1988

"190 Marlborough Street garden", *Process: Architecture,*(85):78-81, 1979.

"Cambridge Centre Garage Roof Garden", *Process: Architecture,* (85):82-87, 145, 1979.

"City Garden: Roof Renovation", *Urban Land,* 44(5):30-31, 1985.

Benson, T., *Building the Timber Frame House: the Revival of a Forgotten Craft.* Charles Scriber's Sons, N.Y., 1980

Blanc, A., *Landscape Construction and Detailing,* McGraw Hill, London, 1996

Epp, R., *Islands in the Sky. An Investigation into the Nature and History of Roofscaping and Recommendations for Future Roofscaping in Winnipeg.* Unpublished Masters Thesis, University of Manitoba. 1983.

Funke, C., "Rooftop Variety", *Landscape Design,* (213):46-48, 1992.

Haynes, G., "Of Ducks and Domes", *Landscape Design,* (213):37-40, 1992.

Hitchmough, J., "Calculating the Earth", *Landscape Design,* (213):42-44, 1992

Itoh, T., *The Classic Tradition in Japanese Architecture; Modern Version of the Sukiya Style,* Translated by Richard L. Gage, Weatherhill / Tankosha, N.Y., 1972

———, *The Elegant Japanese House; Traditional Sukiya Architecture,* Walker / Weatherhill, New York, 1969

Jack, Janet, "Room At The Top", *Landscape Design,* (213):11-15, 1992

———, "On a Podium", *Landscape Design,* (213):24-26, 1992.

———, "A Bridge With A View", *Landscape Design,* (213):27-28, 1992.

Johnston, J., *Building Green: A Guide to Using Plants on Roofs, Walls and Pavements*, London Ecology Unit, London, England, 1993

Keswick, M. et. al., *In a Chinese Garden: The Art and Architecture of the Dr. Sun Yet-Sen Garden*, Dr. Sun Yet-Sen Garden Society of Vancouver, B.C. 1990

Kirkwood, N., "Terrafirma Reconsidered", *Landscape Design*, (213):16-18, 1992

Krupka, B., "A Shallow Success", *Landscape Design*, (213):22-23, 1992

Lee, T.,. *Rooftop Landscape Development: Design Implications for cool Northern Climates*, Unpublished Master Thesis, University of Manitoba, 1982.

Levinson, N., "Cure for the Common Condo", *Landscape Architecture*, 82(9):62-63, 1992.

Lawson, P., "The New Car Park Roof Garden for the Royal Sydney Yacht Squadron, Kirribilli, NSW", *Landscape Australia*, (13(3):234-239, 1991.

Powell, K., "It Feels Like This is Earth", *Landscape Architecture*, 82(9):66-67, 1992.

Redmayne, J., "The Meadow Upstairs", *Landscape Design*, (213):20-21, 1992.

"Roof Garden at Marco Polo Hotel", *Process: Architecture*, special issue no. 6 43-45, 1988.

Roper, P., *A Practical Guide to Roofing*, International Thomson Publishing Ltd., London. 1987

Shinkenchiku Detail Drawing Collection – Houses Shinkenchiku - Sha Co. Ltd., 3rd. ed. Tokyo, 1971

Sutro, D., "Bloom Service", *Landscape Architecture*, 82(9):58-59, 1992.

Takeshima, T., *The Study of the Ying Tsao Fa Shih; Chinese Book of Architectural Technique*, Chuo-Koron Bijutsu Shuppan, Tokyo, 1971

Underwood, K., "Integrating A Roof Garden", *Landscape Design,* (203):10-12, 1991.

Walker, G., "Hong Kong Housing", Landscape Design, (225):11-14, 1993.

Whitelaw, L., "Company Courtyards", *Landscape Design,* (213):33-36, 1992.

"Zen Palette: Amid the Hum of a New York Ad. Agency, A Garden of Calm", *Garden Design,* 13(5):40-41, 1994.

"Roof Decks Design Guidelines", Ottawa: Canada Mortgage and Housing Corporation, 1979.

ILLUSTRATION CREDITS

All Design Drawings and Site Photographs
Aloysius Wong

IMAGE EVALUATION TEST TARGET (QA-3)

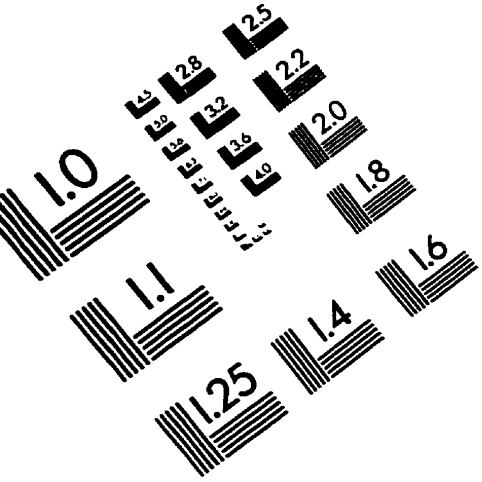

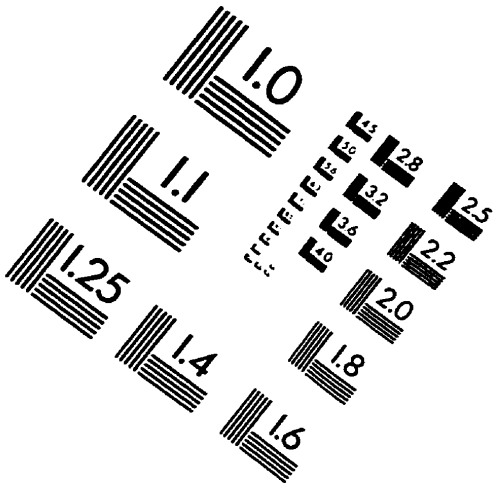

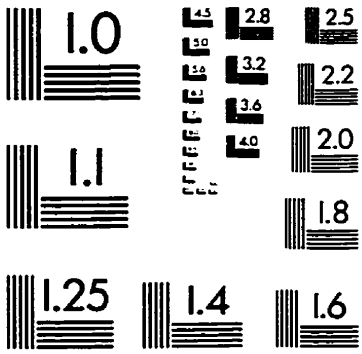

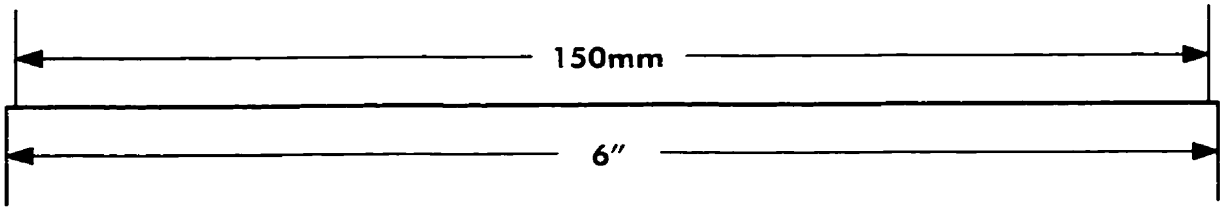

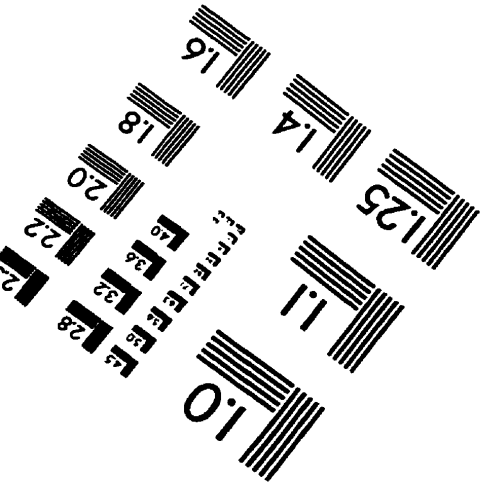

APPLIED IMAGE, Inc
1653 East Main Street
Rochester, NY 14609 USA
Phone: 716/482-0300
Fax: 716/288-5989
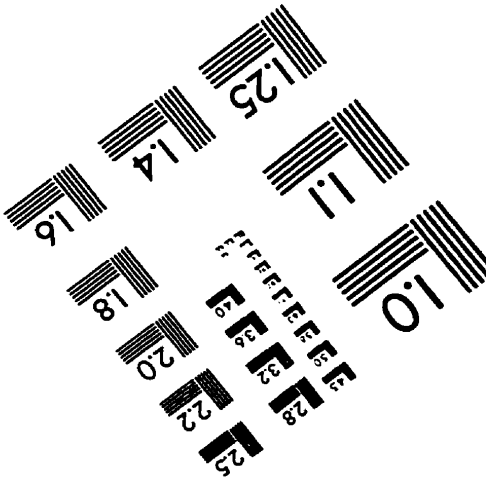
© 1993, Applied Image, Inc., All Rights Reserved