MECH 4860 - Engineering Design

Department of Mechanical and Manufacturing Engineering

Final Design Report
Design of an Automated Radiator Panel Rotating Machine

Monday, December 5th, 2011

Advisor: Dr. P. Labossiere

Client: Micro Tool and Machine Ltd.

TEAM #15

Revolve Consulting

Prepared by

Denis Gagnon _____

Makumba Machungwa _____

Brendan McKay _____

Gavin Stewart _____

Prepared in Partial Fulfillment of Requirements for MECH 4860

December 5th, 2011

Dr. P. Labossiere
Faculty of Engineering
University of Manitoba
Winnipeg, Manitoba
R3T 5V6

Dear Dr. Labossiere,

Please find enclosed our report titled "Automated Radiator Panel Assembly Process" submitted on December 5, 2011. This report has been submitted by the members of Team 15 in section A01 of the MECH 4860 engineering course at the University of Manitoba. The team members include Denis Gagnon, Makumba Machungwa, Brendan McKay and Gavin Stewart.

The initial design project selection process was based on team member requests, project availability and class scheduling. The design project client, called Micro Tool and Machine Ltd. (MTM), is a Winnipeg based machine manufacturing company specialized in supplying the power transformer industry. The project criteria required a process and machine design capable of moving and orienting transformer radiator cooling panels between two machine operations. Based on the design selection and development processes, the team was able to provide MTM with a machine design capable of addressing the project criteria at a relatively low cost and while meeting all of the client's needs.

This report begins with an abstract which delivers a synopsis of the design project. The report abstract includes a concise explanation of the design project, a statement about the design challenge, brief detail about the proposed design and a summary of the design's functional theory and applications. The abstract is followed by an introduction detailing MTM's field of operation. The introduction section of the report provides the reasons why MTM requested the machine design, as well as the purpose of the

machine design. The introduction is also intended to present the design challenge and needs of the client, the design target specifications and the design project objectives.

The body of this report provides detail about the chosen design. The various sections of the report body include: a description of the machine design features and its components, a description of how the design addresses the client's needs, detailed drawings of all machine components, an explanation of machine component assembly processes, a detailed description of the machine operation and cost analysis detail. The conclusion section of this report summarizes how all client design objectives and requirements were met. Lastly, the various report appendices support the report body and provide further detail about the following: the initial concept generation, the design integration and fusion processes, detail of how the machine design meets the client's requirements, all technical analysis and simulation of the design, the machine design strengths and performances, the machine design manufacturing principles and assembly processes, as well as a detailed cost analysis.

This report has been reviewed by all team members before submission. We hope the design project discussed within this report will be as much of interest to you as it has been for all team 15 members. Please feel free to contact us if you have any questions about the report.

Sincerely,

Gavin Stewart
For: Team 15

Abstract

Micro Tool and Machine Ltd. (MTM) required our team to conceptualize and design a machine assembly process capable of moving and orientating transformer radiator cooling panels between two machine operations and in so doing expand the client's current product line. The team's proposed machine design is intended to address all of MTM's design challenges.

The proposed machine design consists of a steel support structure, similar to a crane, onto which purchased pre-manufactured components and drive systems are mounted. All drives are multi-axis modular systems designed to perform the required panel handling operations. The components and multi-axis modular systems are operated with the use of pneumatics, and have basic connecting and mounting assembly arrangements. All the modular drive systems proposed as part of the machine design are combined with similar interface systems. Solutions to required stroke, load and position specifications were met by selecting appropriate multi-axis drive systems.

The use of modular drive systems offered numerous advantages and included the following: a simplified and time-saving design and project planning process, a rapid system assembly, a high mechanical rigidity and the availability of existing CAD drawings for standardized design. Three main pneumatic driven modular systems are proposed within the team's design. Two linear gantries allow for horizontal and vertical translation of the panels, two actuated swivel drive systems perform the 180° panel rotations and two gripper jaws serve to secure the panels during all handling operations. All of the machine design features are detailed within this report and include the following sections:

- a description and drawing of the support structure features.
- all design drawings for the modular drive systems and attachments.
- a description of how the machine design is intended to operate.
- a strength and performance technical analysis of all components.
- a description of all assembly and manufacturing principles.
- a detailed cost analysis of all parts, components and structures.

By evaluating costs, benefits and performances against the stated criteria, the team was able to demonstrate that MTM's proposed design challenge could be met and while meeting all client expectations and project requirements.

Table of Contents

1. Introduction 1

1.1 Customer Needs 2

1.2 Target Specifications 3

1.3 Project Objectives 5

2. Design Overview 7

3. Design Methodology 11

3.1 Static Force 11

3.2 Dynamic Force 20

4. Major Components 29

4.1 Gripper Jaw 29

4.2 Gripper 37

4.3 Pneumatic Drive 40

4.4 Linear Gantry 45

4.5 Structural Frame 48

4.6 Arm Clamp 59

5. Operation 61

5.1 Time Analysis 61

6. Manufacturing Principles 65

7. Cost Analysis 66

7.1 Break Even Analysis 67

8. Limitations 69

9. Discussion and Conclusion 70

Appendix A 74

Appendix B 76

Appendix C 84

List of Figures

Figure 1: Transformer with cooling assembly 2
Figure 2: Individual radiator panels 2
Figure 3: Entire radiator panel rotation machine 7
Figure 4: Close up of gripper and pneumatic drive 8
Figure 5: Two axis linear gantry 9
Figure 6: 520x4000mm panel CAD model used in FEA 11
Figure 7: Fixed support placed on flange area of panel 12
Figure 8: Repeated middle section of panel. Dimensions in millimeters 13
Figure 9: Displacement of 520x4000mm panel with small displacement settings. Scale 1 15
Figure 10: Location of roller support for proof of large displacement test 16
Figure 11: Displacement of panel relative to the roller support. Scale 1.98 16
Figure 12: 520x4000mm panel displacement. Scale 5 17
Figure 13: Stress distribution in the panel. Scale 1 17
Figure 14: Location of maximum stress in panel. Scale 1 18
Figure 15: Resultant forces that appear at each fixed support 19
Figure 16: Velocity of vertical piston movement 21
Figure 17: Velocity waveform for horizontal movement 22
Figure 18: Free body diagram for clamping force 24
Figure 19: Rotational free body diagram for panel 26
Figure 20: Free body diagram for actual contact area 27
Figure 21: Panel flange 29
Figure 22: Sketch of gripper jaw 30
Figure 23: Top gripper jaw 30
Figure 24: Angle on underside of top jaw 31
Figure 25: Bottom plate design 31
Figure 26: Fixed end and forces for bottom plate 32
Figure 27: Stress distribution on bottom plate. Scale 1 33
Figure 28: Displacement for bottom plate. Scale 1 34
Figure 29: Fixture and forces for top jaw 35
Figure 30: Stress distribution for top jaw. Scale 1 35

Figure 31: Displacement distribution for top jaw. Scale 1 36
Figure 32: Gripping force F_H per gripper jaw as a function of operating pressure and lever arm 38
Figure 33: Spring force F_F as a function of size and total gripper jaw stroke l 39
Figure 34: FESTO HGPT-63-A-B-G2 40
Figure 35: Maximum mass moment of inertia as a function of time 42
Figure 36: Forces acting on the drive 42
Figure 37: Max force that can be applied to the driver 43
Figure 38: Maximum axial force that can be applied to the drive in the pull direction 43
Figure 39: Maximum vertical dynamic force that the drive can withstand 44
Figure 40: Maximum dynamic axial push for the drive 44
Figure 41: Maximum dynamic axial pull force for the pneumatic drive 45
Figure 42: Linear gantry 46
Figure 43: Main support structure and members 49
Figure 44: Top main load bearing member 51
Figure 45: Maximum shear vs. beam length plot 52
Figure 46: Bending moment vs. beam length plot 52
Figure 47: 4 by 4 Inch mechanical tubing cross-section 53
Figure 48: Elastic curve analysis diagram 54
Figure 49: Top beam HI deflection as a function of length. 56
Figure 50: Side support members forces 57
Figure 51: Deformation and deflection diagram 58
Figure 52: Arm clamp design with rotary motor, square stock arm and rubber stop 60

List of Tables

TABLE I: CLIENT PRIORITIZED NEEDS 4
TABLE II: ROLL FORMING PROCESS SPECIFICATIONS WITH METRICS 4
TABLE III: PANEL MASS SPECIFICATIONS WITH METRICS 5
TABLE IV: FIXED SUPPORT RESULTANT FORCES 19
TABLE V: CONVERGENCE TEST AND SUMMARY OF RESULTS 20
TABLE VI: CONVERGENCE TEST FOR BOTTOM AND TOP GRIPPER JAWS 37
TABLE VII: SPECIFICATIONS FOR GRIPPER 38
TABLE VIII: SPECIFICATIONS FOR PNEUMATIC DRIVE 41
TABLE IX: COMPONENTS ATTACHED TO OR SUPPORTED BY LINEAR GANTRY 47
TABLE X: ASTM-A36 STEEL MATERIAL PROPERTIES 50
TABLE XI: TOP BEAM LOADING ANALYSIS AND CALCULATION RESULTS 51
TABLE XII: 4 BY 4IN SQUARE TUBING ANALYSIS 55
TABLE XIII: 4 BY 4IN SQUARE TUBING ANALYSIS 58
TABLE XIV: ROLL FORMING PROCESS SPEED AND TIMES 62
TABLE XV: TIME ANALYSIS FOR A 1000MM PANEL 63
TABLE XVI: TIME ANALYSIS FOR A 2000MM PANEL 64
TABLE XVII: DETAILED COST ANALYSIS FOR DESIGN 67

Nomenclature

E_i : Modulus of Elasticity, where the subscript denotes a given material like ASTM A36 steel, dimensionless.

FS_{stress} : Stress safety factor, non-dimensional.

G_i : Modulus of Rigidity, where the subscript denotes a given material like ASTM A36 steel, dimensionless.

I_x : Inertia, also called mass moment of inertia, where the subscript denotes a given component, $kg \cdot m^2$.

L : Length of a given part or component, m.

M_i : Bending moment, where the subscript denotes a given component, $N \cdot m$.

m_i : Mass, where the subscript denotes a given substance like ASTM A36 steel, kg.

P : Load applied on a given surface or component, N.

Q_i : First moment of a given component, m^3.

T: Moment applied to a shaft or tendency to rotate an object about an axis, $N \cdot m$.

V_i : Volume, where the subscript denotes a given material like ASTM A36 steel, m^3.

V_{max} : Maximum shear imposed on a given component, N.

W_i : Power, where the subscript denotes a specific component on the apparatus, W.

δ_i : Deflection, where the subscript denotes a given member, mm.

ϑ : Angle, degrees or radians.

σ_{all}: Allowable stress on a given component, Pa.

σ_{ult}: Ultimate stress of a given material like ASTM A36 steel, Pa.

σ_y: Maximum tension or yield stress on a given material like ASTM A36 steel, Pa.

τ_{max} : Maximum shear stress imposed on a given component, Pa.

1. Introduction

This report details the design challenge proposed by Micro Tool and Machine Ltd. (MTM) for the MECH 4860 course at the University of Manitoba, and how the team addressed all of the design challenges and client needs. Included within this report is an introduction to MTM's design needs, the target specifications and the design project objectives. The main body of this report details the team's chosen machine design and includes the following sections: the machine design features, components, operating principles and assembly processes, detailed machine drawings and a cost analysis. The conclusion section of this report summarizes how all client design objectives and requirements were met.

MTM was first established in 1964 in Winnipeg as a tool and die making company. Soon after, during a time of transformer manufacturing growth, company management focused its efforts on servicing the power transformer industry and to expand from local, to national and international levels [1]. MTM offers industrial equipment and machines which manufacture radiator cooling panel assemblies, for the distribution and power transformer industry. Some of MTM's machine lines include roll forming presses and spot welding machines.

Because industrial transformers generate large amounts of heat, they often require oil-filled tanks to lower transformer temperatures. The tanks are in turn equipped with multiple radiators through which oil circulates by use of forced circulation. Each radiator core is fabricated from two aligned and welded metal panels [2]. Figure 1 illustrates a transformer with a radiator cooling assembly, while Figure 2 illustrates the individual radiator panels [2].

Figure 1: Transformer with cooling assembly [2]. ***Used with Permission***

Figure 2: Individual radiator panels [2]. ***Used with Permission***

1.1 Customer Needs

MTM requires our team to conceptualize and design a machine assembly process capable of moving and orientating transformer radiator cooling panels between two machine operations. The team's proposed machine design is intended to expand MTM's current product line by eliminating the manual panel handling process between the roll former and the spot welder. The three main panel manufacturing machines currently fabricated by MTM include roll form presses, spot welders and seam welders. MTM's current equipment design requires manual handling of each radiator panel by as many as two operators for transferring the panel from a roll form press, to the subsequent spot and seam welding operations. Current radiator panel assembly processes require that, from the roll press, the first of every two panels be manually rotated, placed and aligned on the next panel in preparation of the spot welding

operation. A hydraulic arm is used to secure and push the joined panels at the indexing work station, in preparation for the final seam welding process [2]. MTM requires a machine design capable of eliminating manual handling of the radiator panels, through the use of process automation.

As a primary design project requirement, MTM needs and expects the team to develop a theoretical automated machine system to be used for orienting, aligning and indexing the radiator panels as they come out of the roll form press. The machine design requires 180° rotation about the horizontal axis on only the first of every two panels, the ability to accommodate varying panel dimensions and to be mechanically reliable. MTM also requires a machine design which provides a means to align paired panels before indexing them into a spot welder and in preparation of the ensuing seam welding operation. Finally, MTM requires a machine assembly design that can eliminate human panel handling and improve assembly quality through increased alignment precision [2]. Throughout the design process, MTM needs the team to consider potential variations in assembly line infrastructure and building space, and to take into account the known various panel sizes and roll form process speed specifications. As it was difficult to anticipate the required service hours and environmental conditions of the equipment and machines produced, MTM requires that any design be of high structural integrity. As further design requirements, MTM also expects the team to do the following [2]:

- Conduct a thorough structural analysis of the design in order to ensure structural integrity and reliability of the assembly mechanism.
- Create a cost effective design relative to human labor costs.
- Provide a detailed report describing the required materials and parts and all specifications including power sources, dimensions and tolerances in both metric and imperial units.
- Deliver design visual aids in the form of 3D CAD models, drawings and an animation depicting an operating mechanism.

1.2 Target Specifications

In an effort to determine the required panel handling operational specifications, MTM's needs were first considered and prioritized. The three main radiator panel fabrication processes are roll forming, panel rotation and alignment and indexing with the spot welder. The client's needs provided a large portion of the information required to develop the target specifications. TABLE I illustrates the prioritized client needs.

TABLE I
CLIENT PRIORITIZED NEEDS

Customer Need	Priority
1. Ease of Automation	5
2. Ability to handle different panel sizes	5
3. Minimum human input	5
4. Working 3D CAD model	5
5. Final report with specifications	5
6. Ability to rotate panels	5
7. Requirement to meet deadlines	5
8. Structural integrity of machine	5
9. Panel alignment	4
10. Reliability	4
11. Panel straight path travel	4
12. Panel to remain in line assembly	4
13. Indexing of panels	4
14. Imperial and metric dimensions	4
15. Simple design	3
16. Cost	1
17. Method of powering device	1

Specifications were required for the panel rotation, aligning and indexing operations performed between the roll form press and the spot welder and were based on panel roll forming process speeds. The panel roll forming specifications with their appropriate metrics were provided by the client and are common for all panel widths of 230, 375 and $520mm$ lengths. All panel roll forming specifications are provided in TABLE II.

TABLE II
ROLL FORMING PROCESS SPECIFICATIONS WITH METRICS [2]

Roll Forming Process			
Specification	**Panel**	**Value**	**Metrics**
Processing Speed			
	$1000mm$	25	mm/s
	$2000mm$	33.3	mm/s
	$3000mm$	30	mm/s
	$4000mm$	28.6	mm/s
Time Between Panels			
	$1000mm$	40	sec
	$2000mm$	60	sec
	$3000mm$	100	sec
	$4000mm$	140	sec

As further design analysis was conducted and as the design concept was refined, additional specifications were determined. Process time requirement for panel handling operations was determined from roll forming speed and the time to form a single panel [3]. The panel handling time requirement between each panel forming operation was determined after final design selection, was less than the process times indicated in TABLE II and is detailed within the body of this report.

Angular position, speed, forces and costs of the proposed machine design processes were concept dependent and were also determined after final design selection. The combined panel rotation, handling and indexing times were evaluated to be less than the roll forming time and are also detailed within the body of the report. Panel masses were derived from given material specifications, known to be ASTM A366 low carbon steel with a density of $7850\ kg/m^3$, and are detailed in TABLE III [4]. Mass ranges are explained through the variations in panel widths (230, 375 and $520mm$) [3].

TABLE III
PANEL MASS SPECIFICATIONS WITH METRICS [3]

Panel Mass Specifications			
Specification	**Panel**	**Value**	**Metrics**
	$1000mm$	$1.8 - 4.9$	kg
	$2000mm$	$3.6 - 9.8$	kg
	$3000mm$	$5.4 - 14.7$	kg
	$4000mm$	$7.22 - 19.6$	kg

1.3 Project Objectives

The main objective of this design project was to conceptualize a fully automated process mechanism allowing for radiator panel rotation, alignment and indexing operations in preparation for the subsequent welding processes. The design process began by defining the customer needs and target specifications and by gaining an understanding of the project's constraints and limitations. Having defined customer needs and specifications, the team created a list of additional design objectives which include the following:

- To eliminate human handling for rotating, aligning and indexing the radiator panels.
- To continue the panel's straight path through the production line. The roll forming machine output also needed to align vertically and horizontally with the spot welding machine input.

- To handle all panel lengths ranging from 800 to $4000mm$, and panel widths of 230, 375 and $520mm$.
- To support panels manufactured from 1 and $1.2mm$ thick ASTM A366 steel.
- To rotate, align and index a panel before the next panel exits the roll forming machine.
- To be reliable and have minimal need for machine component maintenance.
- To provide low manufacturing costs and to allow for a competitive selling price.

With a clear understanding of the client needs, the target specifications, the project objectives and the constraints and limitations, the team was able to provide MTM with a machine design meeting all client expectations and project requirements.

2. Design Overview

The automated panel rotation machine incorporates the use of a crane like design to rotate the first of every two panels that exits the roll former. This design essentially pulls the panel exiting the roll former from above, grabs the other end and lifts it up, rotates and places the panel back onto the bed. The next panel is picked up and placed onto the first panel at the end of the table. A variety of motions and components are used to enable the crane to achieve this task. The entire automated panel rotation machine can be seen in Figure 3.

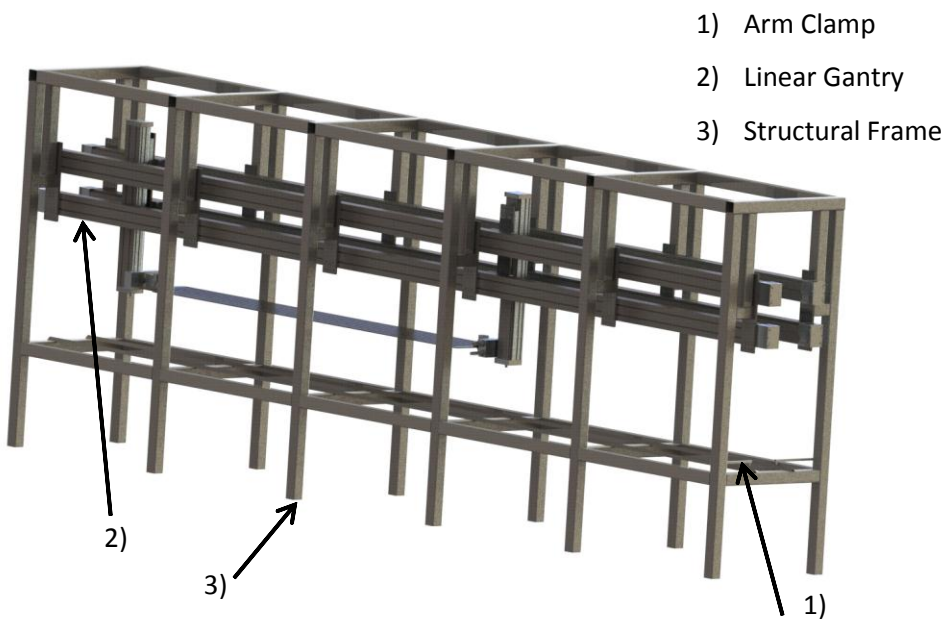

Figure 3: Entire radiator panel rotation machine [5]. ***Used with Permission***

A close up of the gripper and the pneumatic drive can be seen in Figure 4.

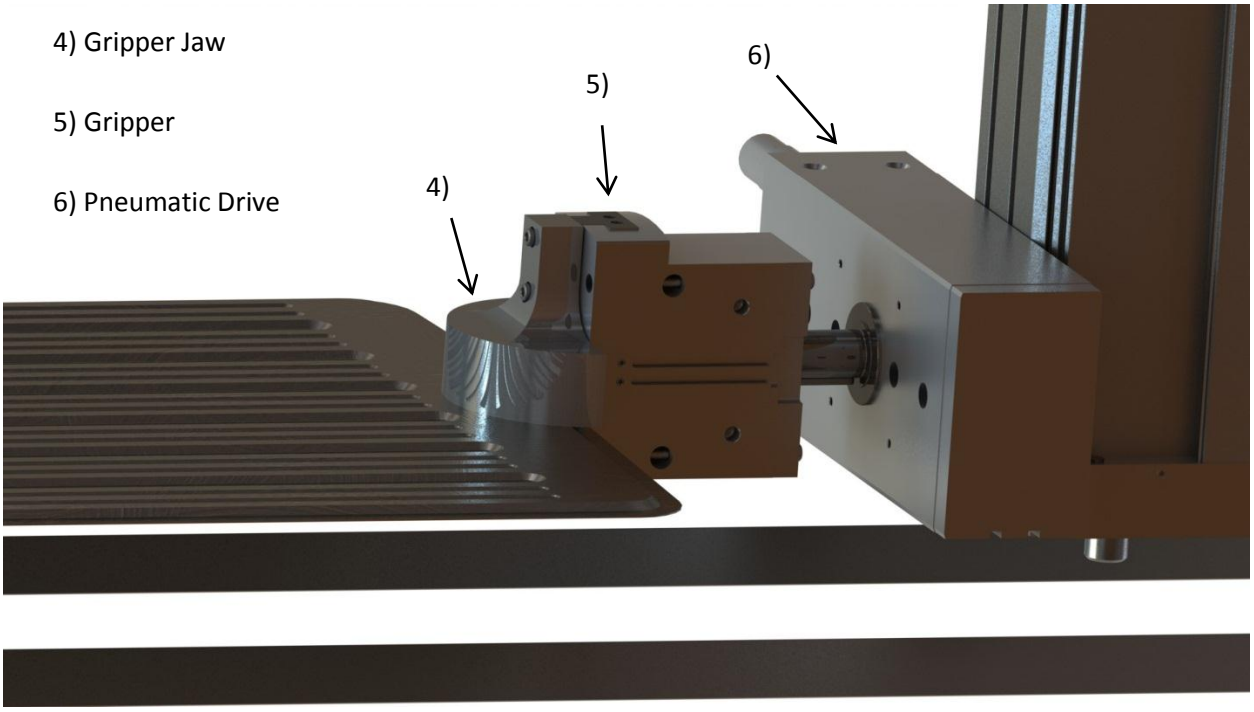

Figure 4: Close up of gripper and pneumatic drive [5]. ***Used with Permission***

The numbered components are considered major components and have been given a brief overview. A more thorough analysis will be performed in the major component section, 4.

1) Arm Clamp

The arm clamp is a device used to hold the panels as the linear gantry performs the next operation. Holding the panel is required to reduce any movement due to vibration of the system. The arm clamps rotate up and clamp down on the top surface of the panel.

2) Structural Supports

The structural frame is the back bone of the entire design. The structure accommodates the attachments for the linear gantries and the supports for the bed. The bed is the platform onto which the radiator panels that come out of the roll former slide onto.

3) Linear Gantry

The linear gantry is a highly accurate, multi axis, linear motion actuator that is used to enable the horizontal (X-axis) and vertical motion (Y-axis) of the crane. The linear gantry is pneumatically actuated and consists of a horizontal support arm on which two vertical arms are mounted. These vertical and horizontal arms are complete with railing systems which allow for the movement of the two vertical arms horizontally along the top arm back and forth, as well as for the panel grippers to move up and down along to two vertical arms. Figure 5shows a linear gantry.

Figure 5: Two axis linear gantry [5]. ***Used with Permission***

4) Top Jaw

The top jaw is a component that grips the panel around the flange area. It has the circumference of the flange and the angle of the flange riser to ensure a good grasp. There is a bottom plate that is a flat plate, which will be used to support the bottom side of the panel at the gripper jaw.

5) Gripper

The panel grippers are actuators that are used to move the gripper jaws. The grippers are pneumatically actuated to enable their opening and closing motions. The pneumatic motor however, allows only for 180° rotation either clockwise or counter-clockwise. This rotation allows for rotation of the panel to either face downwards or upwards.

6) Pneumatic Drive

A pneumatic drive is used in order to rotate the gripper and gripper jaw assembly. The pneumatic drive allows the rotation of the panel while the gripper maintains a grip on the panel. It is a $180°$ rotating drive that works on a rack and pinion system for precision.

Because the linear gantry is a newly developed product, there are limited specifications. A functional CAD model for the linear gantry, in the required length, was unavailable from FESTO [6], the manufacturer for a number of the components used within the design. The features missing are the connection plates and components between the two horizontal drives, the connection between the vertical drive and the pneumatic drive and also a detailed analysis of the connection to the structure. These are all things that a FESTO representative would have to further assist with. A more detailed description of the components will be introduced after a force analysis found below.

3. Design Methodology

In order to accurately specify components, the forces that these components will experience must be known. The forces in the components are attributed to the deflection of the panel, which are large because the panel is very long and thin as well as being supported at only two end locations. An analysis of the static forces will be completed, followed by a dynamic analysis.

3.1 Static Force

The model that was used was a replica of the $4000mm$, $520mm$ wide panel. It was analyzed using Finite Element Analysis (FEA) because of the complex nature of the geometry. The thin nature of the panel required that a shell mesh was performed [7]. Figure 6 shows the representative model of the panel.

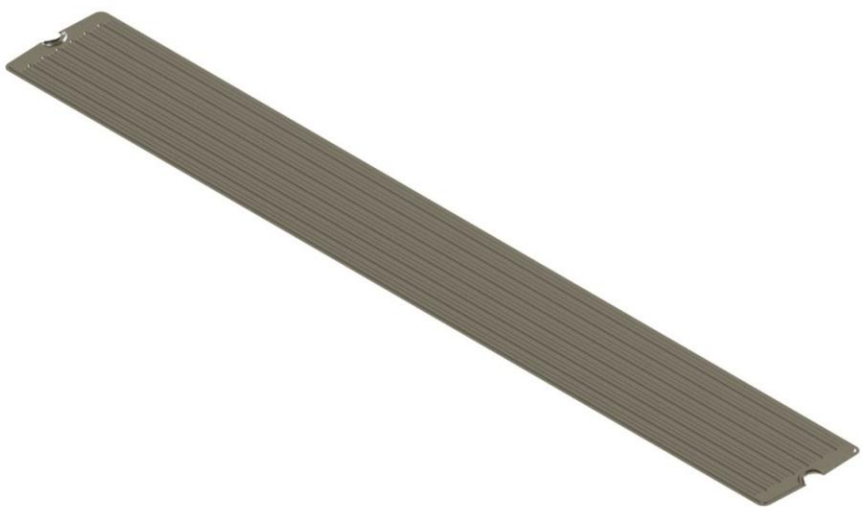

Figure 6: 520x4000mm panel CAD model used in FEA

Using SolidWorks [8] to perform the FEA, the first process was to define the shell features and mesh the panel. The default mesh relevance was selected for this model. The maximum and minimum face sizes where $84.4mm$ and $28mm$, respectively. Two fixed supports on both the flange risers on each end of the panel were used. The only force that is applied to the panel in all cases is gravity. The gravity force will result in a uniformly distributed load on the panel. The fixed support location can be seen in Figure 7.

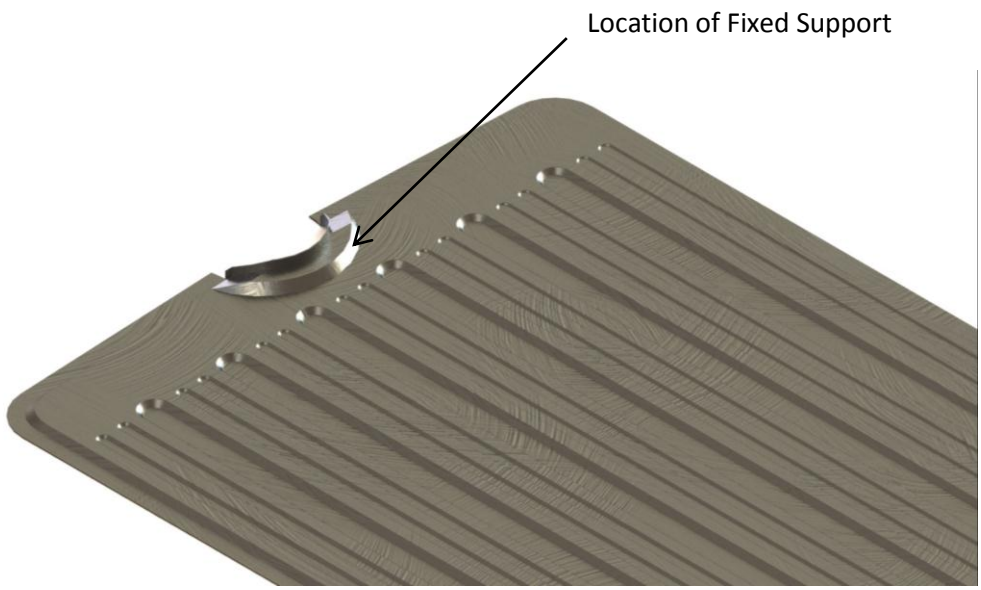

Figure 7: Fixed support placed on flange area of panel

The fixed supports have been placed on this face as this is the intended location for the top gripper jaw to rest against.

When the initial test was run with the small displacement option on, an error was received from the solver saying that it expects large displacements and that it advises the implementation of this option in the model. A simple hand calculation to obtain an approximation for the center deflection of the panel was performed as follows, to verify the estimation of the FEA. Figure 8 shows the repeating profile for the panel middle section.

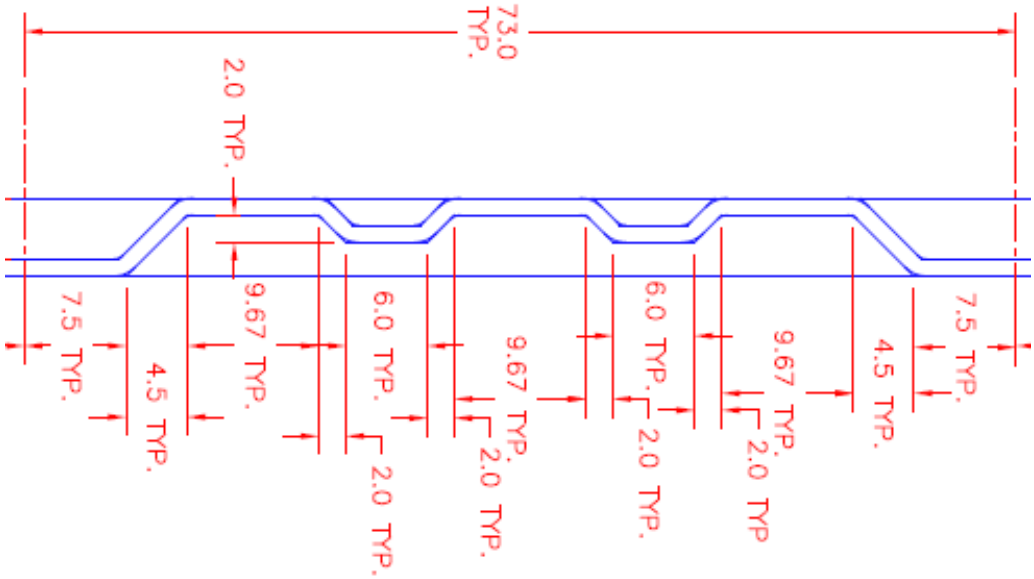

Figure 8: Repeated middle section of panel. Dimensions in millimeters [3]. ***Used with Permission***

Using this profile with the fillets removed to simplify the analysis, it was assumed all sections are rectangular and all angles were treated to be 45° to calculate the resulting moment of inertia.

$$I = \frac{bh^3}{12} + Ad^2 \text{ [9]}$$

Where b is the section width, h is the section height, A is the area and d is the distance from the center of gravity for the section. From SolidWorks, the center of gravity in the *y* direction (vertical) is $3.28mm$ from the top surface. This will be used as an approximate for all sections.

$$I = 3.715x10^{-10}m^4$$

To calculate the deflection of the panel in the center, the worst case scenario will be considered. This worst case scenario is the widest and longest panel, as it has the highest uniformly distributed load. The moment of inertia for the panel can be calculated by multiplying the moment of inertia value, for the repeated section, by 7 due to the 7 repeated geometries on the panel. The calculations follow.

$$I = 7 * 3.715x10^{-10} = 2.600x10^{-9}m^4$$

Using the beam deflection equation for a simply supported beam, with a uniformly distributed load we are able to calculate the maximum deflection of the panel.

$$\delta_{ymax} = \frac{-5\omega L^4}{384EI} \text{ [9]}$$

In the equation above ω is the uniformly distributed load, L is the length of the panel, E is the elastic modulus of the material and I is the moment of inertia for the entire panel. The panel used was used because it will provide a worst case scenario as if there is play at the gripper end. The uniformly distributed load ω is calculated from the volume of the panel and the density. Since the panel is made from A36 steel which has a density of $7850kg/m3$ and a modulus of elasticity of $200GPa$ [4], the distributed load and associated deflection are equal to the following.

$$m_{520\ by\ 4000} = \sim 20kg$$

$$\omega = \frac{20}{4} * 9.81 = 49.05\ N/m$$

$$\delta_{ymax} = \frac{-49.05 * 4^4}{384 * 200E^9 * 2.6E^{-9}}$$

$$\delta_{ymax} = 0.063m\ down$$

$$\delta_{ymax} = 63.00mm\ down$$

Now that the deflection of the panel is approximated, the models can be compared and a best representation determined. From the small deflection simulation run the maximum deflection of the panel was $184.9mm$. Figure 9 represents this displacement.

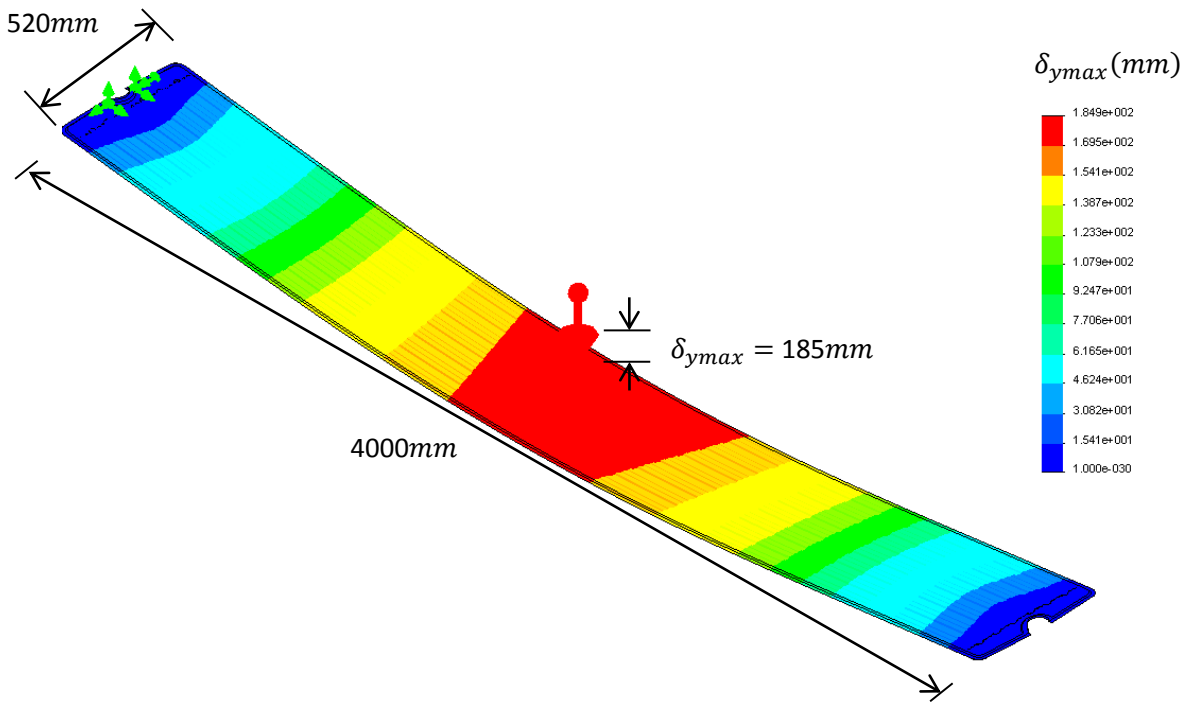

Figure 9: Displacement of 520x4000mm panel with small displacement settings. Scale 1

Since this is much larger than the analytical calculations, the large displacement model needs to be verified as a valid option. This is done by changing the fixtures of one end to a roller support so that one end is free to move. The displacement of this fixture can then be calculated using the large displacement option and determine what path to follow. The new model has one fixed support on the flange riser and one roller support on the flat surface of the flange riser as can be seen in Figure 10.

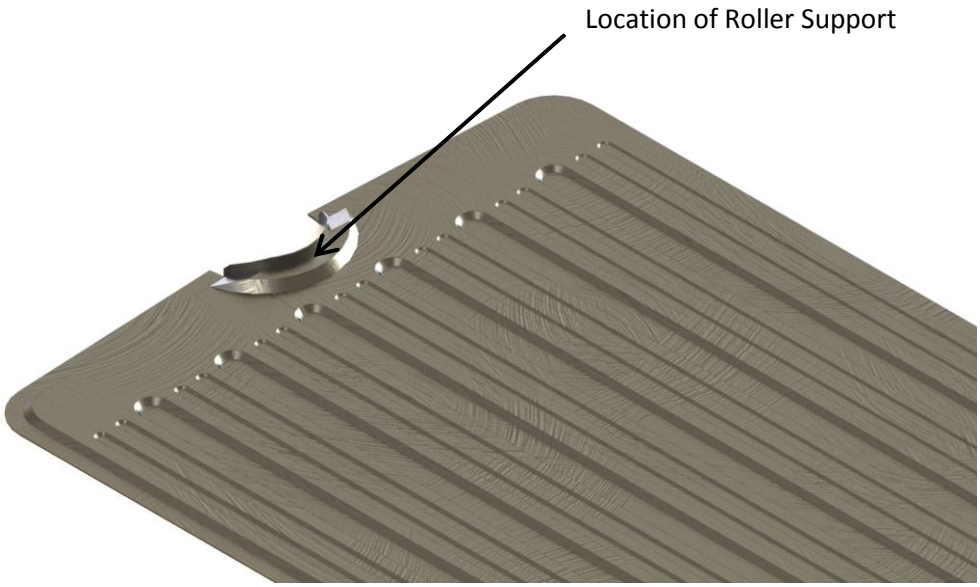

Figure 10: Location of roller support for proof of large displacement test

After performing this test, the roller support moves a distance of $25mm$. Figure 11 shows this displacement. The displacement is large and for this reason the large displacements option within the solver will be used for the FEA.

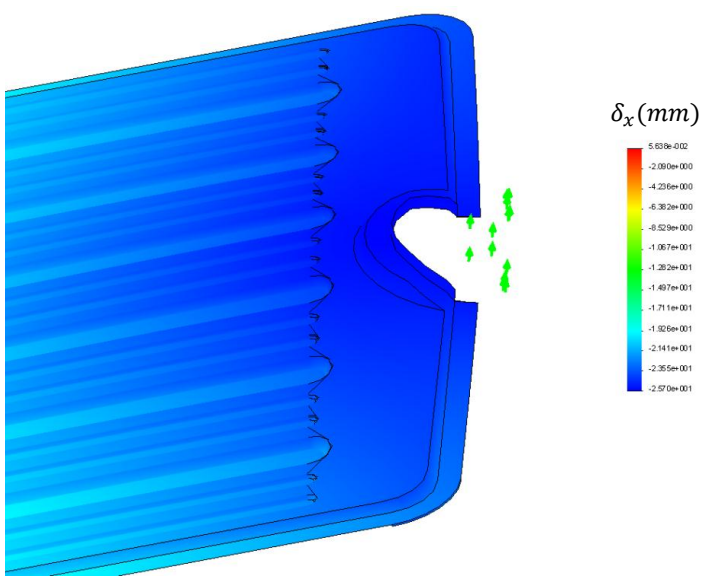

Figure 11: Displacement of panel relative to the roller support. Scale 1.98

It was determined that large displacements option is required, the displacement and associated stress and forces the panel will transmit through the system were analyzed. With the fixed support back in place the maximum displacement of the panel was calculated to be $16mm$. This deflection can be seen in Figure 12.

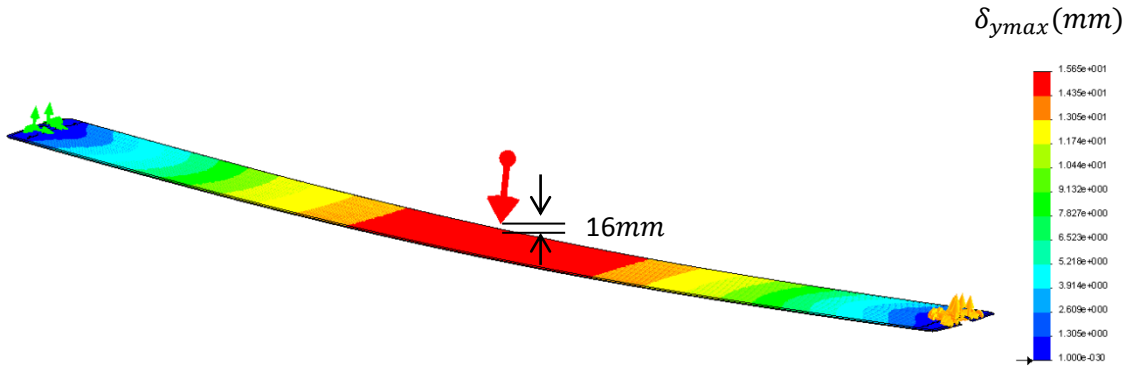

Figure 12: 520x4000mm panel displacement. Scale 5

The stress was analyzed to ensure that the panel will not fail or yield as this would result in misalignment and potential for leaking of the final product. Figure 13 shows the resultant stresses in the panel.

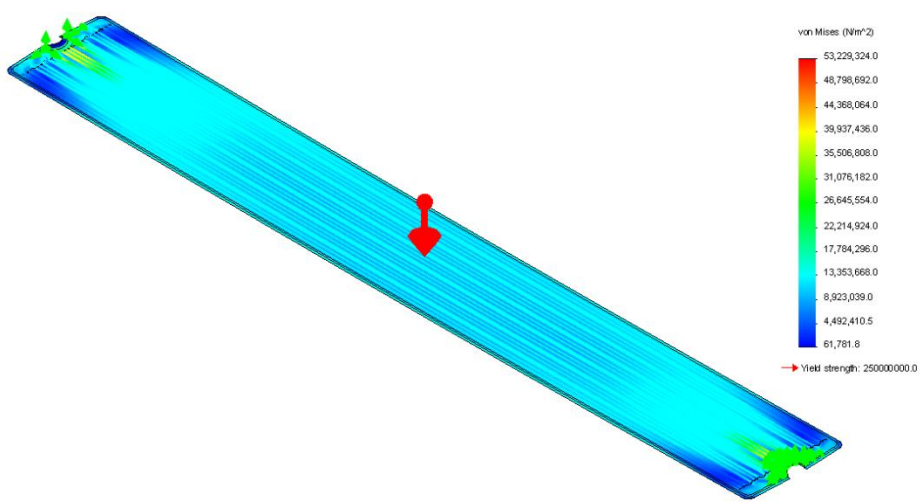

Figure 13: Stress distribution in the panel. Scale 1

From this test it was shown that the maximum stress that the panel experiences in $53MPa$. Since the yield strength of the material is $250MPa$ [4], there is no risk of yielding. Figure 14 shows the location of the maximum stress.

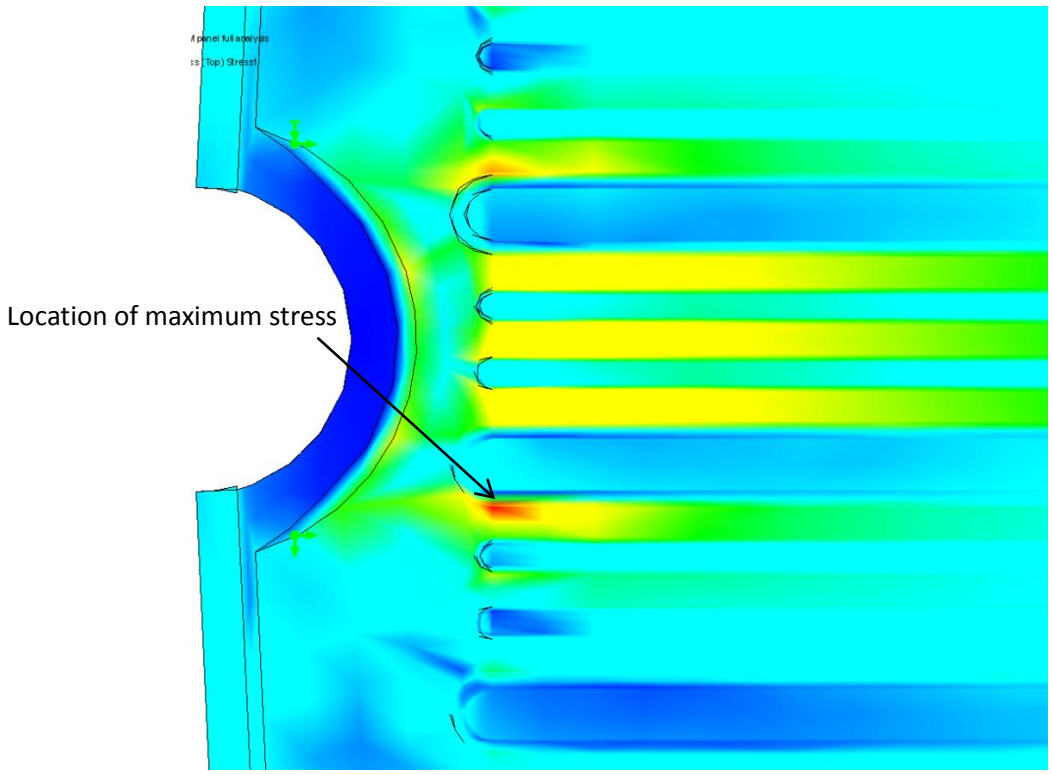

Figure 14: Location of maximum stress in panel. Scale 1

The maximum stress appears on the fillet closest to the flange. The maximum stress in this location can be attributed to the moment that is passed through this area. It is also an area of stress concentration due to the change in geometry and the $1mm$ radius of the fillet.

Next, the reaction forces were determined on the fixed support, the gripper, in both the X and Y directions. The reaction forces are important because these are the forces that the other operable devices on the gantry arms will experience in either axial or moment form. TABLE IV summarizes the reaction forces and Figure 15 shows the orientation.

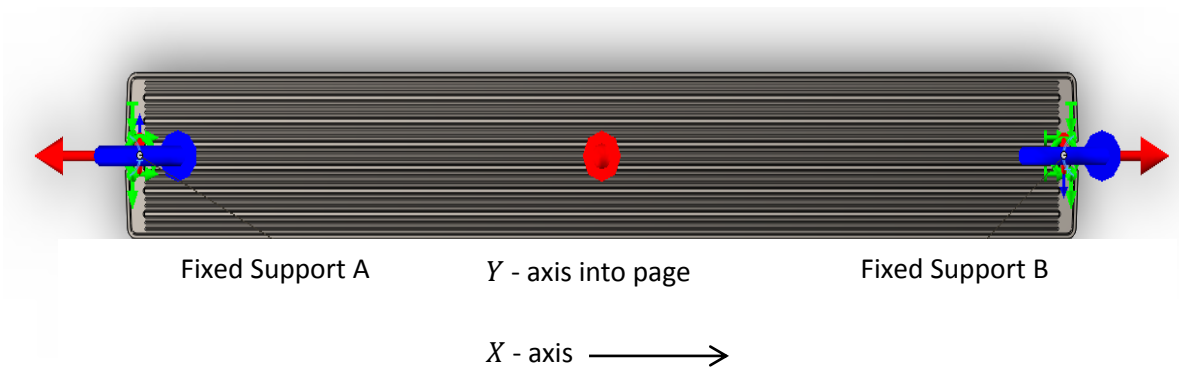

Figure 15: Resultant forces that appear at each fixed support

TABLE IV
FIXED SUPPORT RESULTANT FORCES

Direction	Fixed Support A (N)	Fixed Support B (N)
X-Direction	-4430	4430
Y-Direction	85.5	85.5

From TABLE IV it can be seen that the X forces are both equal and opposite and the Y forces are both equal and in the same upward direction. From Figure 15, it can be seen that there is a moment associated with the fixtures. This moment has been ignored as it is small and will not alter the stresses in the entire assembly significantly.

As with any FEA there are some guidelines to follow. The most important guideline to follow is the requirement to verify a simulation by completing a convergence test. TABLE V shows the convergence test performed.

TABLE V
CONVERGENCE TEST AND SUMMARY OF RESULTS

Results	**Test 1**	**Test 2**	**Test 3**
Mesh Size	$28 - 84.4mm$	$21 - 63mm$	$14 - 42mm$
Number of Degrees of Freedom	519558	523092	625718
Addition Features	Shell mesh	Shell mesh	Shell mesh
Fixed Support A Resultant Forces			
$\boldsymbol{X}$ **- Direction**	-$4430N$	-$4425N$	$-4425N$
$\boldsymbol{Y}$**- Direction**	$85.50N$	$85.50N$	$85.50N$
Fixed Support B Resultant Forces			
$\boldsymbol{X}$ **- Direction**	$4430N$	$4425N$	$-4425N$
$\boldsymbol{Y}$**- Direction**	$85.50N$	$85.50N$	$85.60N$
Maximum Stress	$53.00MPa$	$53.00MPa$	$53.00MPa$
Maximum $\boldsymbol{Y}$**- Displacement**	$16.00mm$	$16.00mm$	$16.00mm$

From this table it can be seen that the model indeed does converge to a stress of $53.00MPa$ and a maximum displacement of $16.00mm$. The results can be deemed a valid representation of the panel.

3.2 Dynamic Force

Consideration of dynamic forces is essential to the analysis of components that comprise a moving machine. A simple dynamic analysis was performed to roughly determine some of the peak forces that the system will experience.

The dynamic force that will act in the vertical direction will be based entirely on the acceleration of the vertical piston.

$$F_{y_{dyn}} = ma_{piston} \text{ [10]}$$

Since the distance traveled by the piston and the time over which this occurs is known, it is possible to obtain an approximation for the acceleration of the piston, as the velocity of the piston will increase and then subsequently decrease. As shown by the velocity waveform that can be seen in Figure 16, the acceleration was derived. It was assumed that the acceleration will not be infinity as the graph would suggest because in reality it will not be infinite. This waveform approximation was used to simplify the analysis.

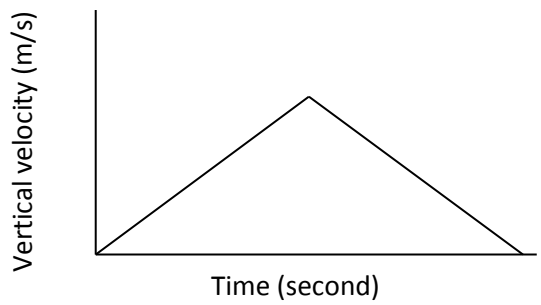

Figure 16: Velocity of vertical piston movement

The maximum velocity can be calculated using the vertical stroke of $300mm$ and the time of 1 second for this vertical movement. Using the equation below V_{max} was solved.

$$V_{max} = \frac{\Delta D}{\Delta t} \text{ [10]}$$

$$V_{max} = \frac{300 - 0}{1 - 0} = 300mm/s$$

Since the maximum velocity is known, the acceleration can be calculated. The acceleration will happen in two stages, first acceleration and then deceleration. It was assumed these values will be equal and opposite in magnitude.

$$a_{piston} = \frac{300 - 0}{0.5 - 0} = \frac{600mm}{s^2} = 0.600m/s^2$$

The mass of the heaviest panel is known to be approximately $20kg$ and therefore the dynamic force can be calculated.

$$F_{y_{dyn}} = 20 \times 0.600 = 12.00\ N$$

This force will apply in both directions of motion, upward and downward of the piston. It is noted that this dynamic force is the total and it will theoretically be split evenly between the two arms. Treat this force as if it were acting on both arms includes a safety factor into the design.

The horizontal force that will be experienced can be obtained using a similar analysis. Approximating the velocity in a slightly different manner then for the vertical motion, due to the increased distance travelled, a velocity profile can be seen in Figure 17. Again, the acceleration will not go to infinity as suggested by this profile but the profile will be used for simplicity sake.

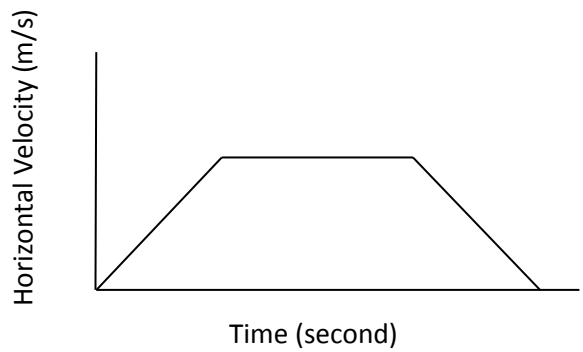

Figure 17: Velocity waveform for horizontal movement

The total time for the $8500mm$ movement is approximately 6 seconds. This will represent a worst case scenario because this is the fastest travel time for the linear gantry. The time segments were approximated as follows.

- 1 second to reach maximum velocity
- 4 seconds at constant velocity
- 1 second for slowing down to rest

An assumption was needed for the distance traveled over the first second. It was assumed that over the first second the horizontal movement is approximately $1450mm$ which is the distance separated into 6 sections. This results in a maximum velocity of $1450mm/s$.

$$V_{max} = \frac{1450 - 0}{1 - 0} = 1450mm/s$$

The acceleration associated with this velocity is shown below.

$$a_{horizontal} = \frac{1450 - 0}{1 - 0} = \frac{1450mm}{s^2} = 1.450m/s^2$$

From this acceleration the horizontal force induced on the panel is

$$F_{x_{dyn}} = 20 \times 1.450 = 29.00N$$

This force will be both in the push and pull directions due to the symmetric motion back and forth along the horizontal plane. A fatigue analysis was not analyzed because the components that will undergo fatigue are pre-engineered from FESTO or will have one or two cycles applied to them, such as the panel.

Analyzing the dynamics of the rotation was performed next. Since the rotation time and the distance of rotation in degrees are known, the angular velocity and acceleration can be calculated. The acceleration was used to determine the torsional force that will be placed on the panel. The required force between the panel and the gripper jaw was determined in order not to lose control of the panel as it rotates and translates.

If it is assumed that the gripper, once clamped onto the panel, has enough clamping force to be treated as a rigid link, the torque that will be passed through the panel can be calculated.

Since the mass moment of inertia for the largest panel is $I = 0.450kg \cdot m^2$, the corresponding torque required to move the panel can be found as follows.

$$T = I\alpha_{rotation} \text{ [10]}$$

Using this equation, the acceleration of the pneumatic drive can be calculated from the given data when sizing the drive. For the inertia moment it was found that a rotation time of 1.5s was sufficient. This is the time it would take for the panel to rotate 180°. The same assumption made for the vertical dynamic force will be used, being the velocity waveform found in Figure 16.

$$\omega_{max} = \frac{1.047 - 0}{0.75} = 1.396\frac{rad}{s}$$

$$\alpha_{rotation} = \frac{1.396 - 0}{0.75} = 1.860\frac{rad}{s^2}$$

The torque applied to the panel will then be calculated below.

$$T = 0.450 \times 1.860 = 0.838N \cdot m$$

The drive can accommodate this torque with no problem, However, there will be a dynamic impact that occurs on the other components that will cause torsion to be applied to the entire system. The dynamic effect of both the impact and the unbalanced rotation will not have a large effect due to the centerline rotation axis and the slow maximum rotation speed of $13.33\ rpm$.

One of the main considerations is the grip force required to maintain control of the panel as it is moved. The free body diagram seen in Figure 18 will be used as an initial estimate to calculate the grip force.

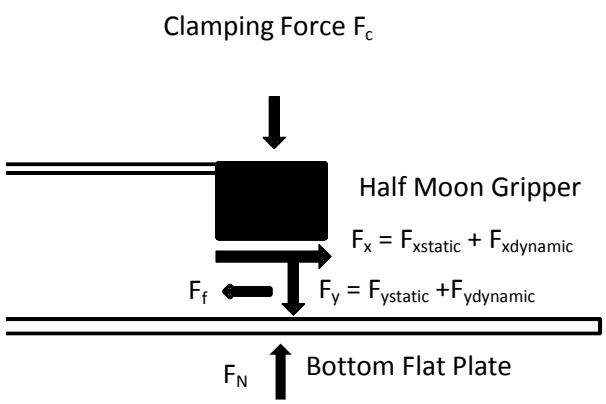

Figure 18: Free body diagram for clamping force

From this free body diagram, the gripper jaws have both vertical forces and axial forces. The vertical forces are the weight of the panel, the clamp force and the normal force. The axial force is the horizontal force, both dynamic and static. The coefficient of friction for steel on steel is 0.8 for a clean surface and 0.16 for a lubricated surface [11]. Since the panel and the jaw will be relatively clean, a coefficient of friction of 0.7 as the worst case scenario will be assumed. Starting with resolving the forces into equations, the following is obtained.

$$F_N = F_y + F_c$$

$$F_f = F_x$$

These equations must be satisfied for the panel not to move under the forces placed on it, $F_x = 4454N$, $F_y = 97.60N$. From the above equations it is known that the frictional force must equal the axial force, so $F_f = 4454N$.

$$F_f = \mu F_N \text{ [10]}$$

From this relationship it is now possible to solve for F_N.

$$F_N = \frac{4454}{0.7}$$

$$F_N = 6363N$$

Then this value was placed in the equation and F_c was solved for.

$$F_c = 6363 - 97.60 = 6265N$$

It was verified that the force will not do any damage to the panel. This was done by approximating the area of contact for the top jaw of the gripper. The radius of the gripper is $64.45mm$ and the thickness of the edge is about $4mm$. This again is the worst case scenario because the gripper is actually designed so that it rests against the raised flange edge so that the contact area would increase. This contact force is then solved as follows.

$$A = \frac{\pi(r+t)^2}{2} - \frac{\pi r^2}{2} \text{ [9]}$$

$$A = 835.0\ mm^2$$

Therefore,

$$\sigma = \frac{6265.3}{835E^{-6}} = 7.500\ MPa$$

This force will therefore not cause any damage to the panel as the force applied is much less than the yield strength of the material.

Finally, the panel as it rotates must be analyzed. The free body diagram in Figure 19 was used to analyze this situation. The free body diagram is for a vertical position of a rotating panel and the forces have been consolidated to the point at the largest distance from the gripper jaw.

Top gripper jaw. Top view

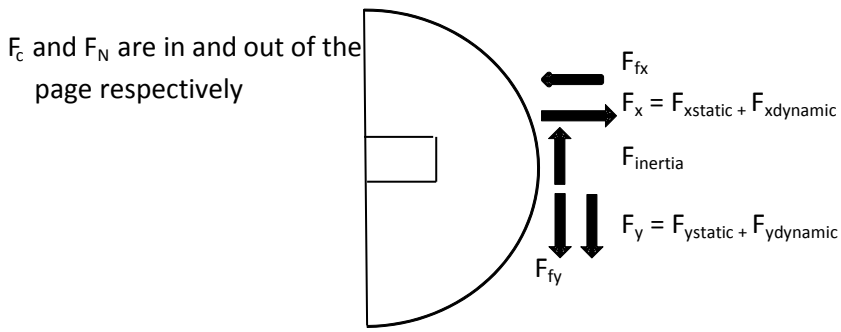

Figure 19: Rotational free body diagram for panel

$$F_{fy} = F_{inertia} - F_y$$

$$F_{fx} = F_x$$

$$F_{inertia} = mr\omega^2 \text{ [10]}$$

The maximum angular velocity that the panel will experience is 1.396 rad/s.

$$F_{inertia} = 20 \times 0.260 \times 1.396^2 = 10.13\ N$$

This relatively small force is expected due to the slow rotational velocity. "r" is the maximum distance from the center line of the gripper jaw to the farthest point on the gripper jaw, which is $0.26m$. This calculation then represents the worst case for the inertial force. Remembering that F_y and F_x are equal to $97.60N$ and $4454N$ respectively.

$$F_{fx} = 4454\ N$$

$$F_{fy} = 1.250 - 97.60 = -96.35\ N$$

From this calculation the friction force in the vertical direction will be $96.35N$. The worst case for this type of loading is still the axial component and therefore the clamp force found previously will still be the maximum required.

A further consideration that will allow a reduction in clamp force is the direction contact area. For the above analysis it was assumed that the only portion touching was the bottom edge of the gripper jaw. In

reality, the entire flange riser will be used for a contact surface. This will also help to reduce the pulling effect from the axial load. The free body diagram to analyze the force that will be applied though this section can be seen in Figure 20.

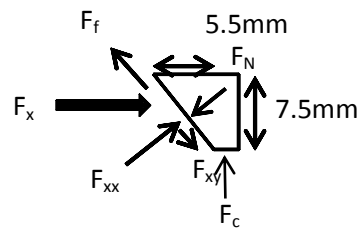

Figure 20: Free body diagram for actual contact area

From this free body diagram it is possible to perform the following calculations.

$$\theta = \tan^{-1}\frac{5.5}{7.5} = 36.25°$$

$$F_f + F_{cy} = F_{xy}$$

$$F_{cx} = F_{xx}$$

$$F_{xx} = \cos 36.25 \times F_x$$

$$F_{xx} = \cos 36.25 \times 4454 = 3591.9N$$

$$F_{xy} = \sin 36.25 \times 4454 = 2633.7N$$

$$F_{cx} = F_N = 3591.9\ N$$

$$F_f = \mu F_N$$

$$F_f = 0.7 \times 3591.9N = 2514.33N$$

Therefore,

$$F_{cy} = 2633.7 - 2514.33 = 119.4N$$

$$F_c = \frac{F_{cy}}{\cos\theta} = \frac{119.37}{\cos 36.25} = 148.0N$$

This clamping force is much more achievable given FESTO's products, but to be conservative the force will be increased by three times, as a safety factor, to ensure that there is no potential for slippage or losing control of the panel. The clamping force required is therefore $450.0N$.

A thorough understanding of both the static and dynamic forces has been achieved through this analysis. Each component will be presented individually with their respective specifications below.

4. Major Components

All major components mentioned in the Design Overview, are further detailed in the following sections of this report.

4.1 Gripper Jaw

The design process required the team to propose a method and mechanism for clamping and securing the panels in preparation of the panel handling process. Because of the panels' irregularly shaped central flanged ends, special gripper jaws were designed and proposed to mount the FESTO grippers to secure the panel flange ends.

Based on geometry, individual upper and lower gripper jaws were designed to accommodate the dimensions of the panel flanges. The panel flanges are located at each end of the panel and are illustrated in Figure 21. The upper gripper jaw was designed as a semi-circle to accommodate the circular raised flange area. The lower gripper jaw was designed with a flat plate mount capable of sliding between paired panels.

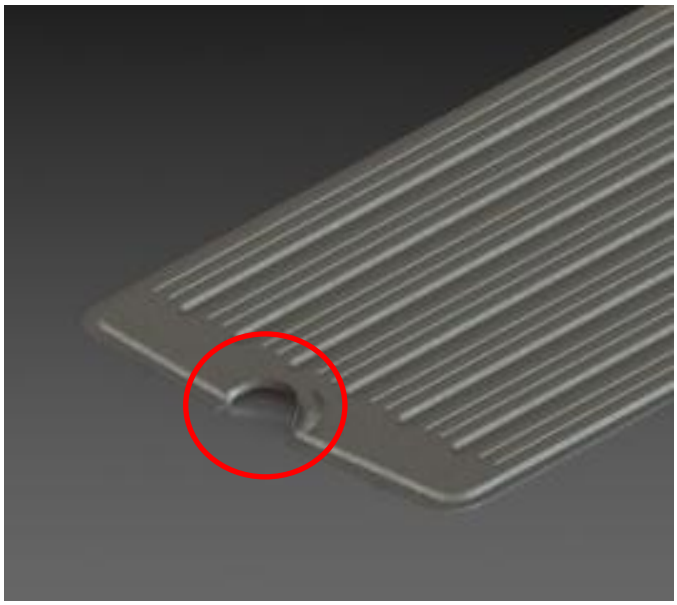

Figure 21: Panel flange

Figure 22 illustrates the orientation of the gripper jaws with respect to the gripper.

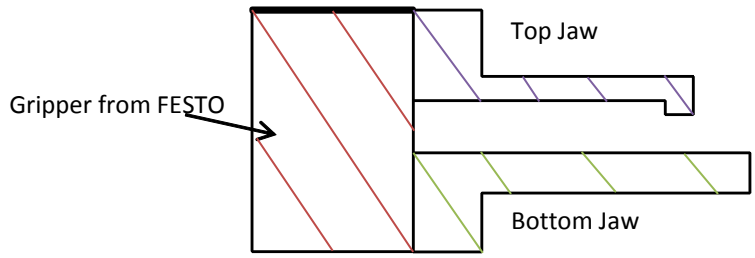

Figure 22: Sketch of gripper jaw

The team proposed that the gripper jaws be mounted on the gripper by means of screws. The screws are to be located at the vertical section of the top gripper jaw and on the lower vertical section of the bottom gripper jaw. The top jaw will perform the clamping motion while the bottom jaw will remain fixed, one way action.

Gripper jaw clamping forces were dependant and based upon the forces required to secure and handle the panels. A force analysis was performed to determine the amount of force required to secure the panels and was evaluated at $450N$. All clamping forces were assumed to pass from the top gripper jaw, through the panel ends and onto the bottom gripper jaw plates. Figure 23 illustrates the proposed top gripper jaw design.

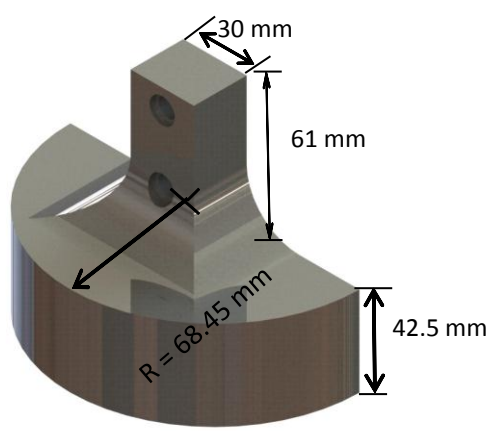

Figure 23: Top gripper jaw

To completely conform to the top panel flange section geometry, an angled cut was also required on the interior of the upper gripper jaw and is illustrated in Figure 24.

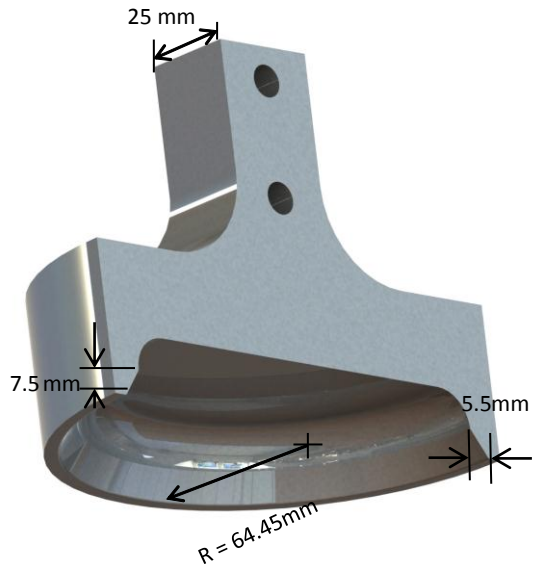

Figure 24: Angle on underside of top jaw

The bottom gripper jaw is shown in Figure 25 and all gripper jaw dimensions can be found in Appendix A.

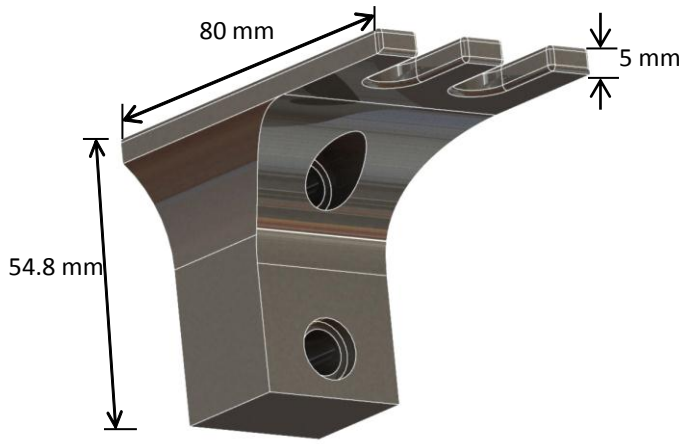

Figure 25: Bottom plate design

An FEA was performed to ensure that the stresses associated with supporting the panel are not too large for the gripper jaw components. It was proven that a $450N$ clamp force on the panel is required. This force will have to be transmitted though the top jaw to the point of contact. There will also be vertical force due to the weight of the panel and the dynamic loads that is equal to $97.6N$. In addition to these forces there will be a $4454N$ load acting in the axial direction. Since these components are relatively small, the weight of the components themselves will be neglected as this force will not induce much variation.

There are two steps to this FEA. First it is required to determine if the bottom jaw can support the clamp force and the weight of the panel. For a worst case scenario, both forces are placed at the end of the jaw and the jaw is fixed at the other end. These forces and fixtures can be seen in Figure 26.

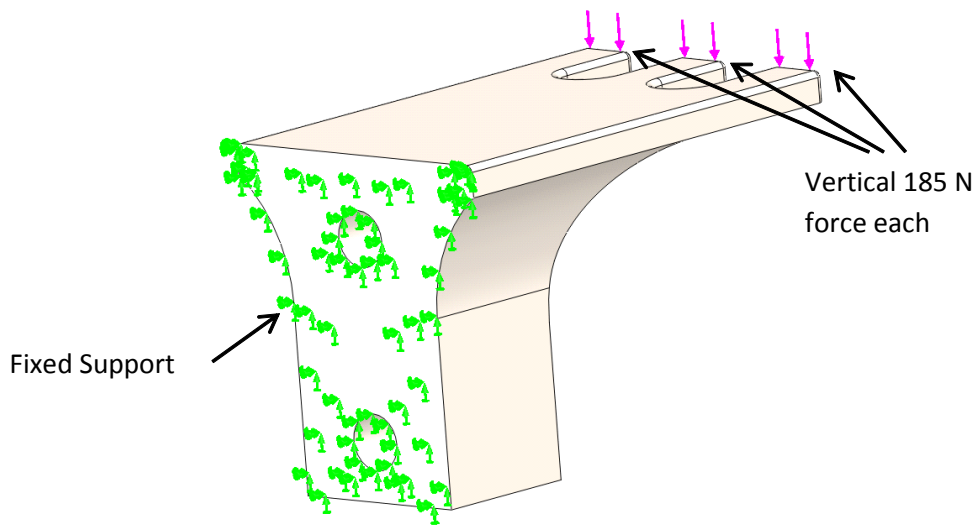

Figure 26: Fixed end and forces for bottom plate

When the study was run a stress of $93MPa$ was obtained. The same steel as the panel was used, so this is just slightly over a factor of safety of 2.6. The stress can be seen in

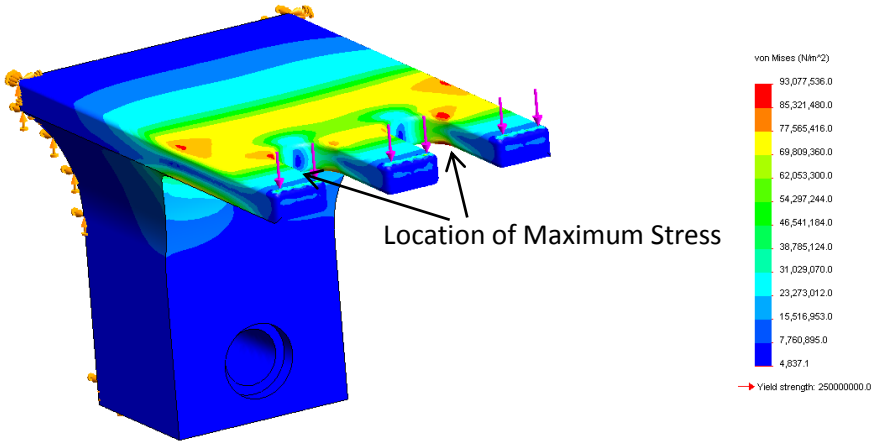

.

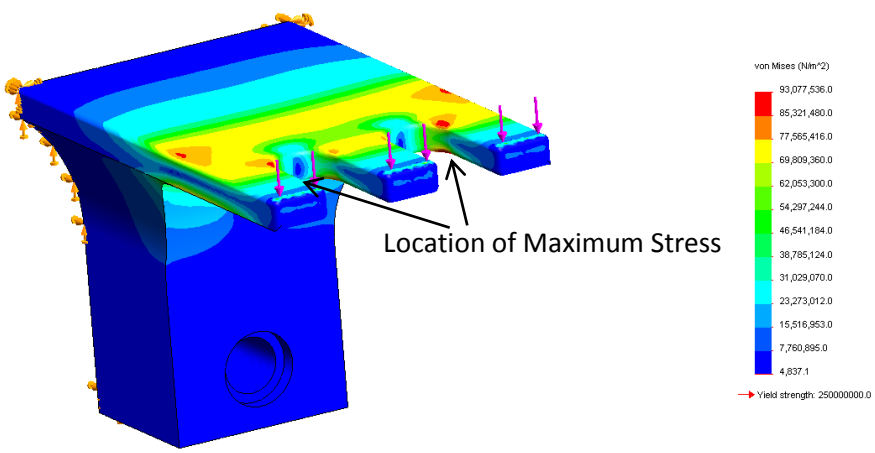

Figure 27: Stress distribution on bottom plate. Scale 1

The displacement was the next consideration looked at. A maximum deflection of $0.14mm$ was found at the end. The displacement result can be seen in Figure 28.

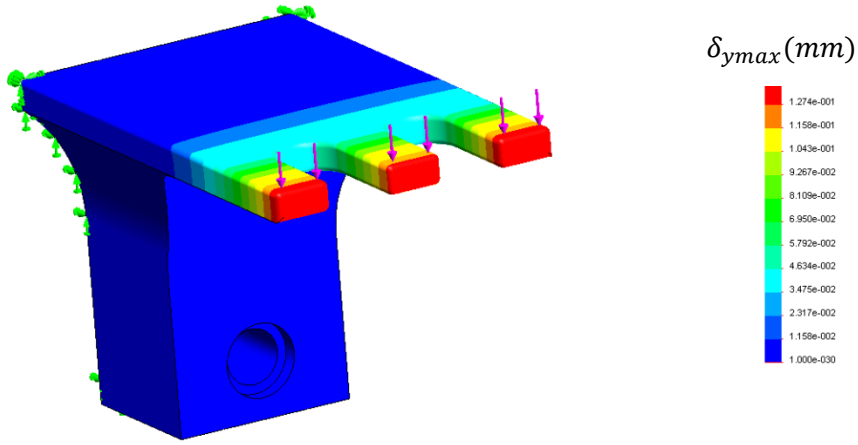

Figure 28: Displacement for bottom plate. Scale 1

Following this, the top jaw was analyzed. The forces present are the axial force of $4454N$ and the clamp force of $450N$ plus the weight of the panel for the inverted situation. This results in a maximum vertical force of $550N$. Again the back end of the top jaw will be fixed to simulate the fixed geometry of when the jaw is bolted. The forces and fixtures can be seen in Figure 29.

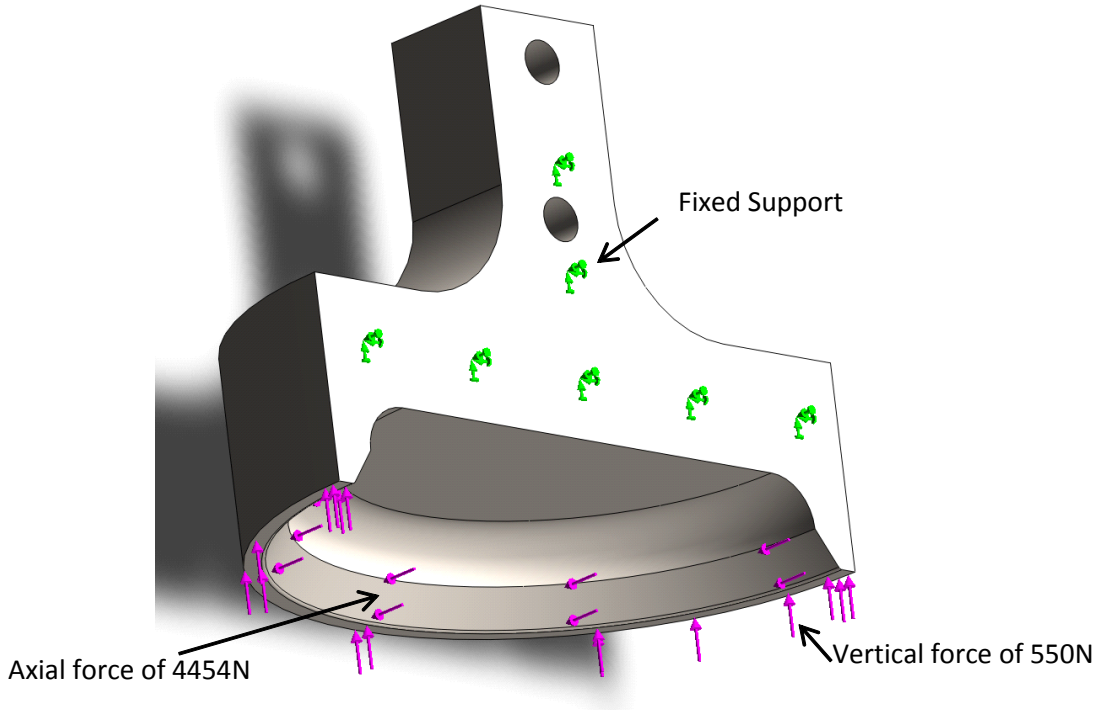

Figure 29: Fixture and forces for top jaw

The maximum stress found in the part from the study was $16MPa$. The stress found leaves a 15 times factor of safety on yielding for this part. The stress distribution can be seen in Figure 30.

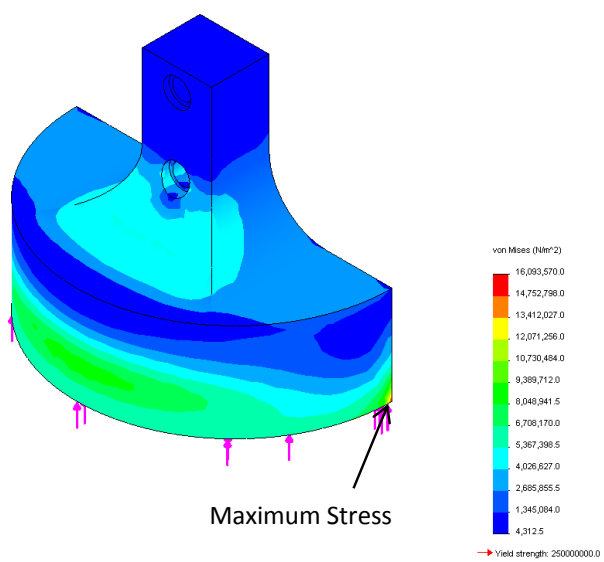

Figure 30: Stress distribution for top jaw. Scale 1

The location of the maximum stress is on the bottom corner of the top jaw. The location is indicated in Figure 30. Having the maximum stress in this location is not an unexpected situation because this is an area of stress concentration considering that it is fixed and a relatively small section compared to the rest of the fixed geometry.

The maximum displacement of the study was about $0.006mm$. Figure 31 shows the displacement of the top jaw.

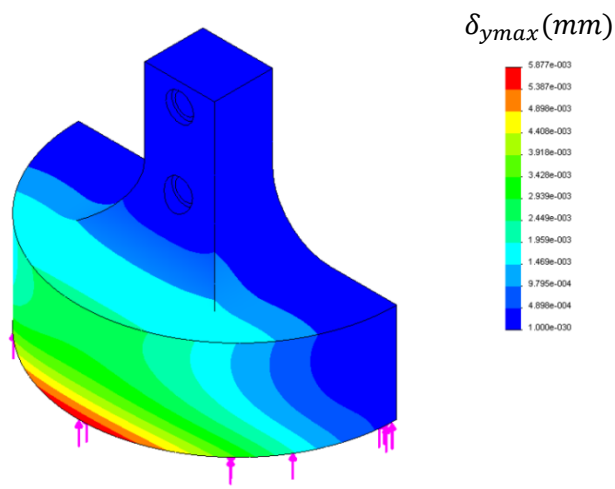

Figure 31: Displacement distribution for top jaw. Scale 1

The clamp force on the jaw was in the upward direction, which is opposite than expected because the force will be coming from the gripper and not the panel. This was done because it is equivalent to the reaction force the panel will apply on the jaw. Therefore it is a valid representation of the force transfer.

As with all FEA, a convergence test must be performed. This has been done for both the top jaw and the bottom jaw. The results are shown in TABLE VI.

TABLE VI
CONVERGENCE TEST FOR BOTTOM AND TOP GRIPPER JAWS

	Test 1	**Test 2**	**Test 3**
Bottom Plate			
Mesh Size	$0.69 - 2.07mm$	$0.91 - 4.54mm$	$0.64 - 3.19mm$
Degrees of Freedom	127546	384789	928215
Stress	$93MPa$	$103MPa$	$92MPa$
Displacement	$0.14mm$	$0.14mm$	$0.14mm$
Top Jaw			
Mesh Size	$1.48 - 7.42mm$	$1.34 - 6.7mm$	$1 - 5.33mm$
Degrees of Freedom	59313	95075	125789
Stress	$16MPa$	$17.1MPa$	$19.9MPa$
Displacement	$0.006mm$	$0.006mm$	$0.006mm$

From TABLE VI it can be seen that the top jaw stress is not convergent. It is still assumed that this test is valid because the stress is so low and the point of maximum stress is a point of theoretically infinite stress. This will not happen in a practical situation and the stress will not go to infinity, as this point is not rigidly fixed as in the model. For the bottom plate there is also what appears to be a non-convergent trend but when the mesh size was refined to a finer mesh, it starts to approach $94MPa$. Since the safety factor is large, the jaws will not experience any yielding.

4.2 Gripper

The pneumatic gripper selected to grab the panel is the FESTO HGPT-63-A-B-G2. This gripper uses air pressure to open and close the gripper jaws and allows one jaw to remain in a fixed position, such that the gripper becomes single-acting. By specifying the normally closed option, the panel will not be dropped if air pressure is lost, as the gripper reverts to a clamped position without any applied air pressure. TABLE VII lists the specifications provided by FESTO [12].

TABLE VII
SPECIFICATIONS FOR GRIPPER [12]

Feature	Metric
Size	63
Stroke per gripper jaw	$16mm$
Mode of operation	Single-acting
Operating pressure	$8\ bar$
Ambient temperature	$5\ to\ 60°C$
Max force on gripper jaw Fz static	$5000N$
Max torque at gripper Mx static	$160N \cdot m$
Max torque at gripper My static	$180N \cdot m$
Max torque at gripper Mz static	$140N \cdot m$
Weight	$3562kg$

This gripper was chosen as it provides one of the largest single-acting grip forces from FESTO. From Figure 32, it can be derived that the grip force of the gripper is approximately $1000N$ at a distance of $70mm$, which is the length of the designed gripper jaw.

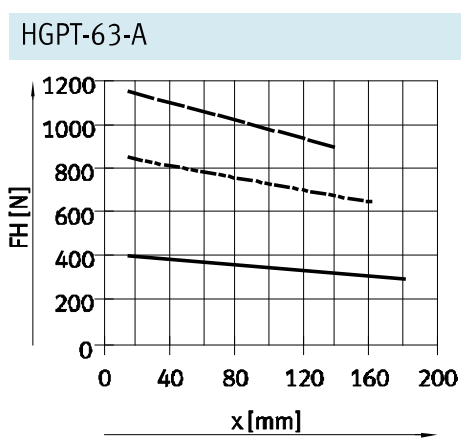

Figure 32: Gripping force F_H per gripper jaw as a function of operating pressure and lever arm [12]. ***Used with Permission***

The pneumatic gripper contains a plunger with in an air chamber. When air is supplied to the gripper, the plunger rises and the gripper jaw opens. A spring on the opposite side of the plunger closes the

gripper jaws when the air supply is cut [12]. The force supplied by the spring can be determined from Figure 32 and then added to the grip force found in Figure 33 for the total grip force of one jaw.

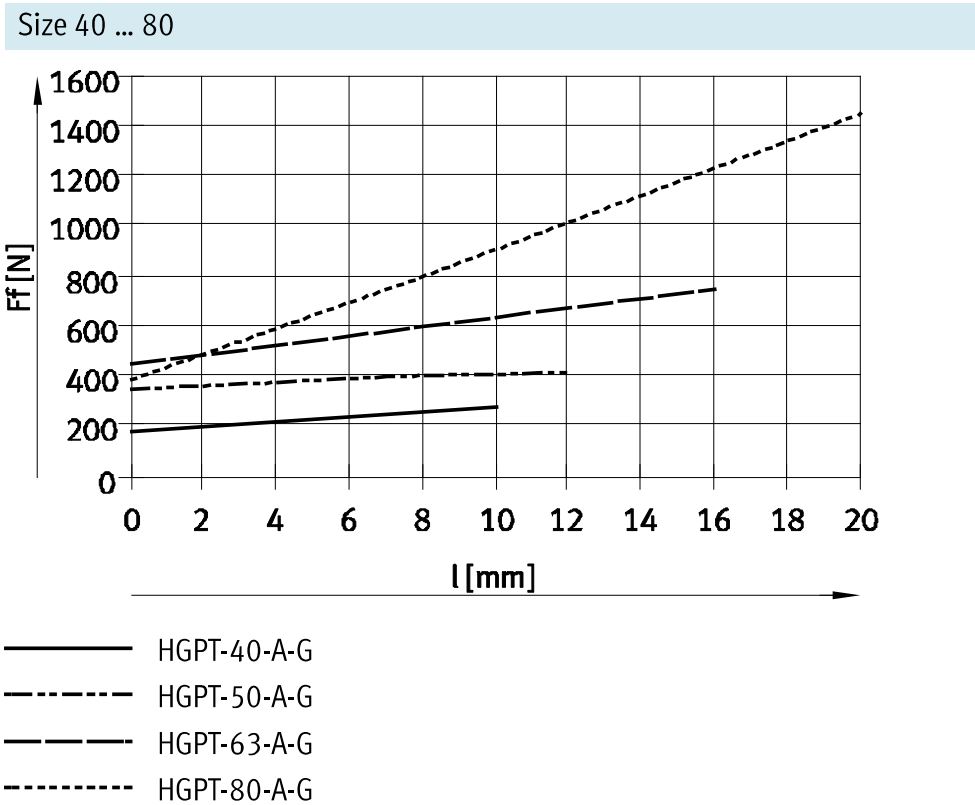

Figure 33: Spring force F_F as a function of size and total gripper jaw stroke l [12]. ***Used with Permission***

At a jaw stroke of $16mm$, F_F is approximately $750N$. It was then necessary to calculate the total grip force per jaw by using the following equation [12].

$$F_{Gr} = F_H + F_{Ftotal} = F_H - 1.2x + 0.8F_F$$

$$F_{Gr} = 1000N - 1.2(70mm) + 0.8(750N) = 1516N$$

At $1516N$ of gripping force, the ability to handle $5000N$ of axial load and the single-acting motion ensured that this gripper will grab the panel securely and withstand the force invoked on the gripper by panel deflection. An image of the gripper can be seen in Figure 34. The gripper will be attached to the pneumatic motor by FESTO's HAPG-SD2-28 gripper mount [13]. This mount is specifically designed by FESTO to mate this model of gripper to the model of pneumatic motor used in the design.

Figure 34: FESTO HGPT-63-A-B-G2 [12]. ***Used with Permission***

4.3 Pneumatic Drive

The pneumatic drive selected was a FESTO DRQD [14]. This drive is a rack and pinion design that uses proximity sensing and adjustable cushioning in order to ensure the rotation angle is accurate. The hydraulic shock absorbers have been selected in order to have more accuracy and less wear for the drive. The $50mm$ diameter shaft has been selected to handle the large axial forces applied to it. The specifications that are relevant to the design can be found in TABLE VIII.

TABLE VIII
SPECIFICATIONS FOR PNEUMATIC DRIVE

Specification	Description	Units
Rotation Angle	The angle in which the drive will rotate	$180°$ [14]
Permissible Swivelling Frequency	The number of cycle per second that the motor can perform	$0.8Hz$ [14]
Accuracy	The repetition accuracy as the drive approaches the ends	$\leq 0.20°$ [14]
Operating Pressure	The required air pressure of the drive	$2 - 10bars$ [14]
Torque	The available torque that the drive can exert	$50N \cdot m$ [14]
Maximum Mass Moment of Inertia	The maximum mass moment of inertia for the drive as a function of swivel time	See Figure 35
Maximum Force on Drive	The force that can be applied to the drive.	See Figure 36
Mass	The mass of the drive	$2kg$ [14]
Ability to interface with Grippers	The ability for the drive to be mounted to the grippers	Pre-built parts available from FESTO [14]

Using Figure 35 and calculating the maximum mass moment of inertia the drive would experience it is possible to confirm that this drive will be able to handle the rotation requirements.

The mass moment of inertia that the largest panel exerts can be solved for as follows:

$$I = \frac{m(b^2+c^2)}{12} \text{ [10]}$$

In the situation at hand, the maximum mass is of the $4000mm$ panel and is approximately $20kg$ as mentioned previously. “b” is the thickness of the panel, assumed to be $5.5mm$ and “c” is the width of the panel, $520mm$. Performing the calculation yields,

$$I = 0.45\ kg \cdot m^2$$

Looking at Figure 35, it can be seen that this mass moment of inertia at approximatly $1s$ cycle time confirms the drive is capable of the panel rotation. The 180° rotation is represented by the middle dashed line. A speed of rotation of two seconds was chosen for dynamic force considerations, which were explained in the dynamic analysis section.

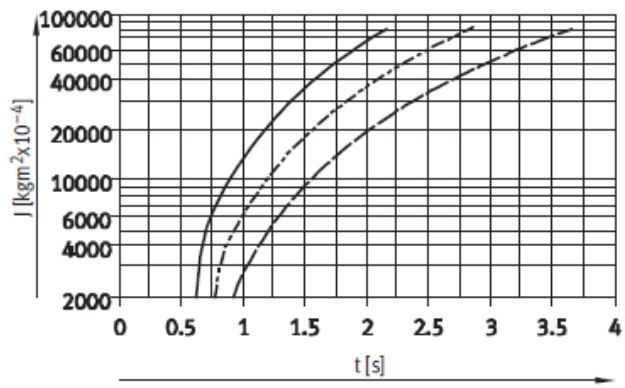

Figure 35: Maximum mass moment of inertia as a function of time [14]. ***Used with Permission***

Since the drive can accommodate the mass moment of inertia, it is possible to calculate the force that will be transmitted thought the drive.

Due to the suspension of the panel, there will be both a vertical force and a horizontal force that will be applied to the drive. Looking at Figure 36, the action of the forces can be seen.

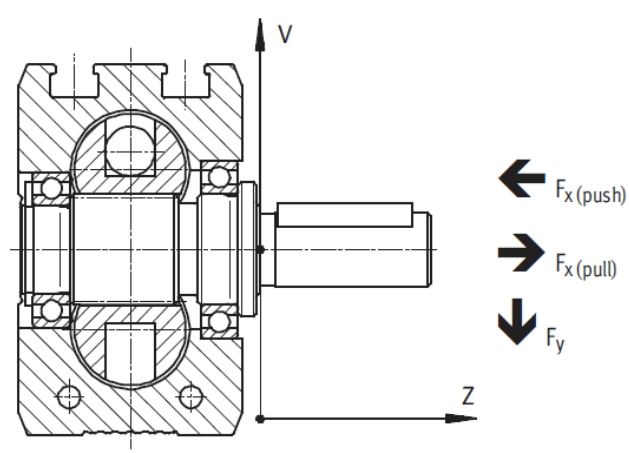

Figure 36: Forces acting on the drive [14]. ***Used with Permission***

From the panel analysis, it is known that there will be an axial force of $4425N$ in the pull direction, applied on the center line axis. It is also known that there is $85.6N$ in the horizontal direction, applied at a distance of approximately $200mm$. Using Figure 37 for the horizontal direction and Figure 38 it can be determined if the drive can support the worst case scenario for loading conditions, the entire force at $200mm$.

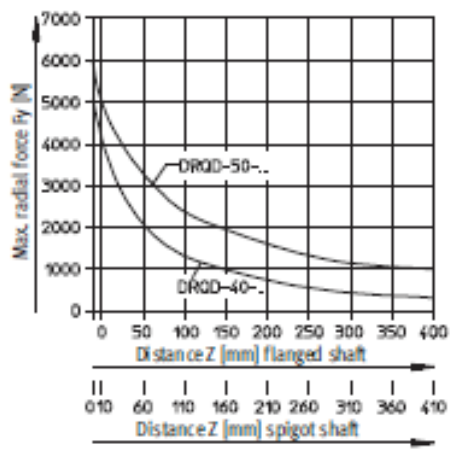

Figure 37: Max force that can be applied to the driver [14]. ***Used with Permission***

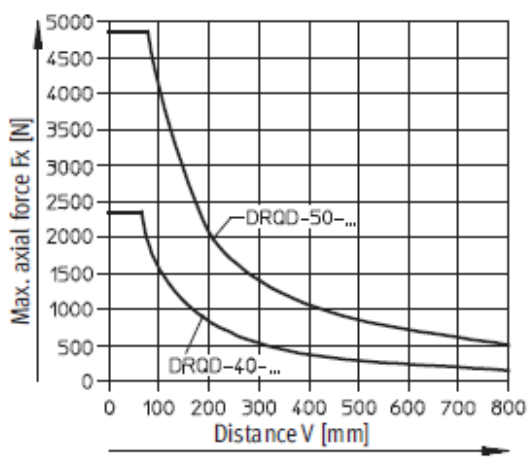

Figure 38: Maximum axial force that can be applied to the drive in the pull direction [14]. Used with Permission

From these charts, it can be seen that there is no issue with the forces that the drive will experience because the maximum force allowed it much greater than the force applied.

The last and final specifications that need to be confirmed are that the drive can accommodate the dynamic force of the panel being moved in the horizontal and vertical directions. From the dynamic analysis, it is known that the vertical force is $12N$ and the horizontal is $29N$ in both the push and pull

directions. From Figures 39, 40 and 41, it can be determined that the drive can handle the dynamic forces. Figure 39 illustrates the vertical dynamic force that can be experienced by the drive.

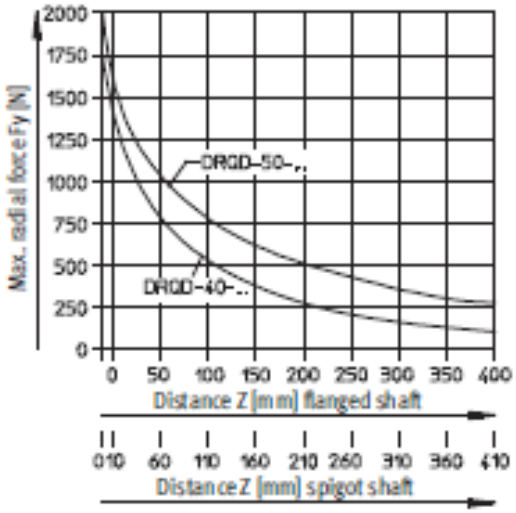

Figure 39: Maximum vertical dynamic force that the drive can withstand [14]. ***Used with Permission***

Figure 40 shows the axial dynamic push force that can be experienced by the drive.

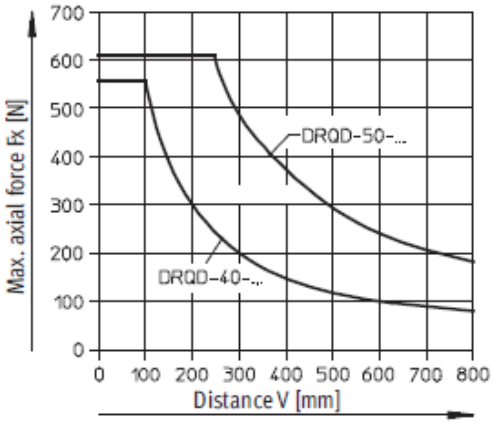

Figure 40: Maximum dynamic axial push for the drive [14]. ***Used with Permission***

Figure 41 shows the maximum dynamic axial pull force for the drive.

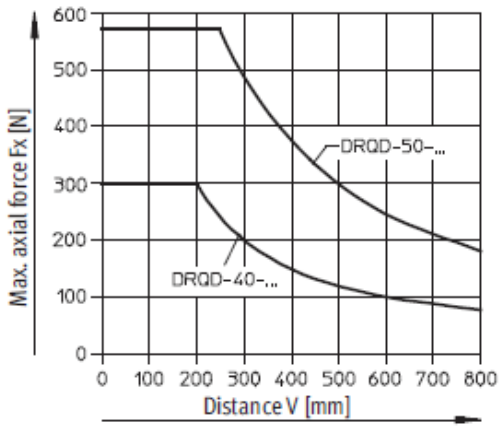

Figure 41: Maximum dynamic axial pull force for the pneumatic drive [14]. ***Used with Permission***

From these graphs, it can be seen that the drive can withstand the required dynamic loading because in all situations the dynamic load applied to the system is not greater than the maximum load allowable. Therefore, the DRQD-B-50-180-YSJR-A-AR-ZW pneumatic drive will satisfy all the requirements for this design.

4.4 Linear Gantry

The crane design incorporates the use of a multi axis linear actuator called a linear gantry. The linear gantry is used to pick up and move the panels from the roll former to the spot welder. This section of the report helps to describe the operation of the linear gantry, the specifications of the linear gantry used in the final design and how the specifications were chosen.

Figure 42: Linear gantry [13]. ***Used with Permission***

Two linear gantries, like the one illustrated in Figure 42, are incorporated within the design. The use of two linear gantries is required, because the panels must be picked up by each end before being rotated and transported to the spot welding operation. A gripper and a pneumatic motor are attached to each gantry and both gantries are mounted onto a supporting structural frame. Each vertical gantry has a front and rear arm.

The panel rotation process begins when the first panel exits the roll former. Both gantry arms are initially positioned in front of the roll former. The front gantry subsequently lowers its arm and gripper to clamp and secure the panel. The front arm lifts the front end of the panel and drags it over the bed, until the entire panel is resting on the panel bed. The rear arm lowers its gripper and the rear end of the panel is clamped. Following these operations, the two gantry arms lift the panel a distance of $300mm$. The $300mm$ enables sufficient clearance between the panel and the bed, allowing the pneumatic motor to rotate the panel 180°. After the panel is rotated, the arms carry the panel horizontally to the spot welding position, where they lower the panel, release it and move back to the starting position at the roll former exit.

Based upon the linear gantry and component motions described above, an analysis of the forces exerted on the gantry members was required to ensure proper gantry selection and to meet all required specifications. All components were considered during the analysis. The components considerations included the linear gantry specifications, the largest panel mass, the panel gripper masses, the pneumatic motor masses and the mounting bracket masses. The combined weight of all component masses was used to specify the minimum load exerted on each linear gantry. TABLE IX below shows the list of components and masses supported by the gantries.

TABLE IX
COMPONENTS ATTACHED TO OR SUPPORTED BY LINEAR GANTRY

Components	**Mass (kg)**
Largest radiator panel	20
Panel grippers (2)	7.124
Gripper Jaws (2 sets)	3
Gripper motor (2)	2
Attachment brackets (2)	2
Total	34

As indicated in TABLE IX above, the combined mass of all components was evaluated at $34kg$. Because two gantries carry each panel during most panel handling operations, each gantry must have a minimum mass carrying capacity of $16.5kg$. As one of the automation process stages requires one of the gantry arms to drag the panel onto the panel bed without the assistance of the second panel, it was decided that each linear gantry arm needed to support the total combined mass of $33kg$. A Standard FESTO Linear Gantry LP 50 DHSL-50-2EGC185TB-EGC185BS [15] with a maximum effective load capacity of $50kg$ was selected, to ensure it could meet mass handling requirements.

To accommodate the maximum panel lengths and widths, the linear gantry horizontal (Y) and vertical (Z) axes stroke specifications needed to be considered. The maximum panel bed length was used to determine the gantry's horizontal axis stroke. The panel bed's length was determined by considering the panel handling sequences for the longest panel length ($4000mm$). The gantry stroke also needed to allow the gantry arms to travel over and past the ends of the panel bed. By considering the longest panel handling process, the panel operation sequence can be described as follows:

- The first of every two panels needs to be rotated and placed in front of the spot welder
- The first panel operation needs to be completed before the second panel completely rolls out of the roll former and onto the panel bed
- The second panel needs to be moved out of the way and along the panel bed, before the third panel exits the roll former.

In the event that both of the longest panels simultaneously lay on the panel bed, the panel bed length would need to be a minimum of $8000mm$. A panel bed length of $8500mm$ was chosen to allow for clearance. The minimum horizontal gantry stroke was therefore evaluated at $8500mm$ to accommodate two $4000mm$ panels on the panel bed.

The maximum radiator panel width of $520mm$ was considered during the gantry's vertical stroke selection. To accommodate the 180° panel rotation, without touching the bed, the widest panel needs to be lifted a minimum of $260mm$. Clearance was also required between the panel and the bed during the panel rotation process. A $300mm$ minimum lift and vertical gantry stroke was chosen to allow for proper panel rotation. The FESTO linear gantry selection process was based on the maximum load handling requirements, as well as the vertical and horizontal stroke specifications. The linear gantry needed to meet the combined $50kg$ maximum effective load handling capacity and the $8500mm$ horizontal and $300mm$ vertical stroke requirements.

Analysis of the static and dynamic forces exerted on the panels and modular components were determined and provided in the analysis section of the report. Due to the very limited linear gantry specifications available on the FESTO website [16], incorporation of the static and dynamic force analyses during the linear gantry selection process was somewhat restricted. It was assumed that the FESTO Standard LP 50 linear gantry product developers had performed similar analyses. The Standard LP 50 linear gantry is rated as being capable of supporting and moving a maximum load of $50kg$ at speeds which meet and can exceed, those required by the design. During the linear gantry and component selection process, the heaviest panel handling requirement was also given a safety factor of 2. It was concluded that the FESTO Standard LP 50 linear gantry would be more than capable of serving the intended purposes, while meeting all panel handling requirements.

4.5 Structural Frame

The proposed design consists of a steel support structure onto which purchased pre-manufactured components and drive systems are mounted. All drives are multi-axis modular systems designed to perform all required panel handling operations. The components and modular systems are operated with the use of pneumatics, have basic connecting and mounting assembly arrangements, and are mounted on plates attached to the frame structure. The frame structure is to be constructed with

4 by $4in$ square mechanical steel tubing, having a wall thickness of $0.375in$. Figure 43 below illustrates the basic frame structure. The letters *P* and corresponding arrows within Figure 43 represent the applied loads from the attached components and multi-axis modular systems. Letters are used within the diagram and in later sections of this report to identify individual structural members. As an example of the structural member letter representation, the top horizontal member *HI* has a span ranging between the letters *H* and *I* in Figure 43.

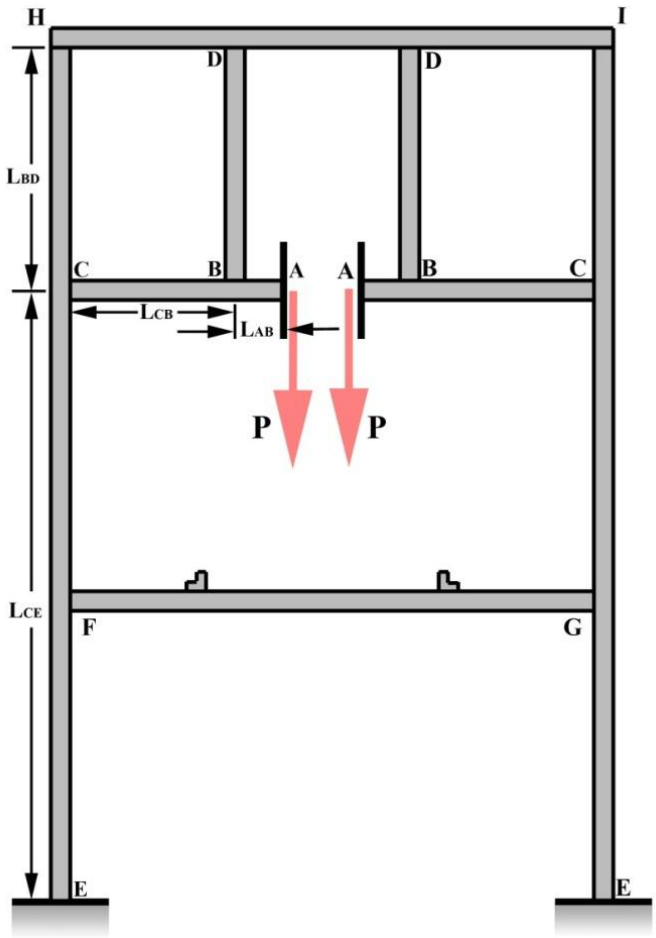

Figure 43: Main support structure and members

The frame structure was designed to accommodate all motions of the mechanical drives and modular systems. A mathematical analysis was performed for the main load bearing members, and all results are provided in Tables X, XI and XII. The mathematical analysis was performed to determine reactive forces, bending moments, allowable stresses, shear and normal stresses, moments of inertia, centroids, first moments, deflections, elongations, safety factors, areas, volumes, masses and costs. All frame analysis and calculation results were determined while using ASTM-A36 steel as material of choice. The steel

properties are listed and provided in Table X. All frame analysis and design modeling results and figures within this section of the report were accomplished and generated with the aid of MATHEMATICA [17] source code, and are attached within Appendix B.

TABLE X
ASTM-A36 STEEL MATERIAL PROPERTIES [4]

ASTM-A36 STEEL MATERIAL PROPERTIES		
Units	**Imperial**	**Metric**
Density ρ (lb/in^3 , kg/m^3)	0.2840	7860.00
Ultimate Stress σ_{ult} (psi, Pa)	58 000	4.000×10^8
Yield Stress Tension σ_{ult} (psi, Pa)	36 000	2.500×10^8
Yield Stress Shear σ_{ult} (psi, Pa)	21 000	1.450×10^8
Modulus of Elasticity E (psi, Pa)	2.900×10^7	2.000×10^{11}
Modulus of Rigidity G (psi, Pa)	1.120×10^7	7.720×10^{10}

Although two drives and multi-axis modular systems are to be mounted on the frame, indicated as points *A* within Figure 43, the loads *P* will be transmitted within the frame structure and eventually be applied on the top member *HI* of the structure. The top main horizontal load bearing structural member *HI* in Figure 43 was treated as having to support a single point load located at its center and in an effort to determine maximum deflection of the member.

The masses of each drive and modular system were determined to be approximately $100kg$ (from the CAD model). To allow for the additional mass of the radiator panels and any other component which might be attached to the frame structure at a future time, the mass of each drive and modular system was doubled and evaluated to be $200kg$. The effective live and dead loads on the top main horizontal beam *HI* was subsequently evaluated at $400kg$. The resulting net force on member *HI* was in turn evaluated to be $882lb_f$ $(3924N)$. The load forces applied to member *HI* were transmitted to points *A* and *C*, indicated in Figure 44 and resulted in equal reactive forces R_A and R_B of $441lb_f$ $(1962N)$. A maximum shear force V_{max} was also evaluated to be $441lb_f$ $(1962N)$, while a maximum bending moment M_{max} was evaluated at $10582lb_f \cdot in$ $(1196N \cdot m)$. The equations indicated below were used to determine all forces and moments. An algebraic expression for the maximum moment M_{max} was

determined and is also provided below. Both shear and bending moment plots were generated and are provided in Figures 45 and 46.

$$\Sigma M_x = 0,\ \ \Sigma F_x = 0 \text{ and } \Sigma F_y = 0 \quad [9]$$

$$M_{max} = \frac{2\,P\,a\,b}{L}$$

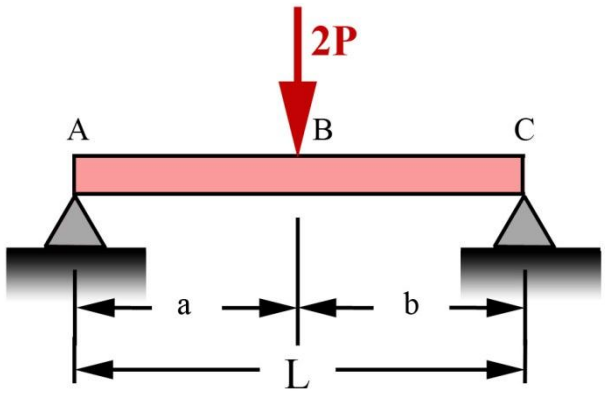

Figure 44: Top main load bearing member

Figure 44 illustrates the beam loading and support arrangement used for generating the reactive forces and bending moments on the beam *HI*. All dimensions and values obtained during the analysis of member *HI* are provided in TABLE XI.

TABLE XI
TOP BEAM LOADING ANALYSIS AND CALCULATION RESULTS

Top Beam Loading Analysis, Data and Calculation Results		
Units	**Imperial**	**Metric**
Load *2P* (lb_f, N)	881.8	3924
Length *L* (in, m)	48.00	1.219
Length *a* (in, m)	24.00	0.6096
Length *b* (in, m)	24.00	0.6096
Reaction R_A (lb_f, N)	440.9	1962
Reaction R_B (lb_f, N)	440.9	1962
Shear V_{max} (lb_f, N)	440.9	1962
Bending Moment M_{max} $(lb_f \cdot in, N \cdot m)$	10580	1196

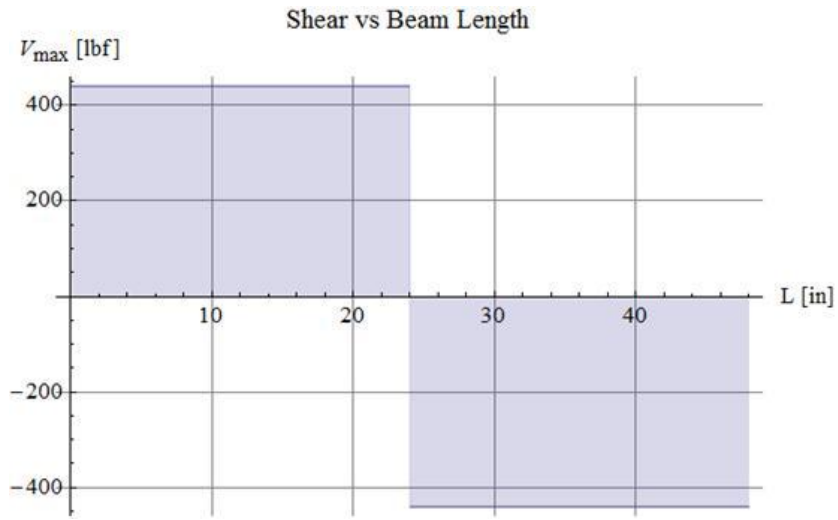

Figure 45: Maximum shear vs. beam length plot

A plot of the maximum shear versus beam length was generated and is provided in Figure 45 above. A plot of the bending moment versus beam length was also generated and is provided in Figure 46 below.

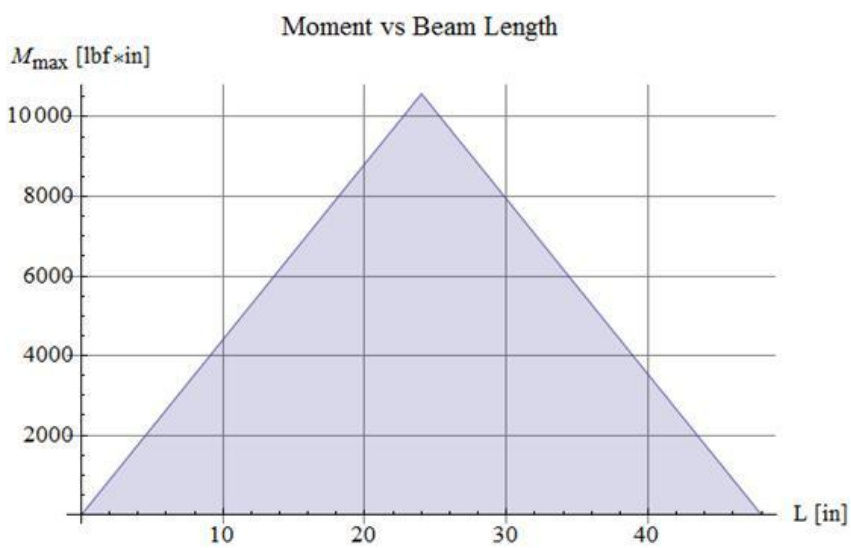

Figure 46: Bending moment vs. beam length plot

A cross-section diagram of the square 4 by $4in$ mechanical tubing (hollow box) used for the frame structure is provided in Figure 47. With a wall thickness t of $0.375in$, a height h and base b of $4in$, the

centroid *c* was determined to be located at $2in$ from the base. The algebraic equation for determining the material area *A* of all beam members was defined and is provided below.

$$Area \ = \ A \ = \ 2t \ (h + b - 2t)$$

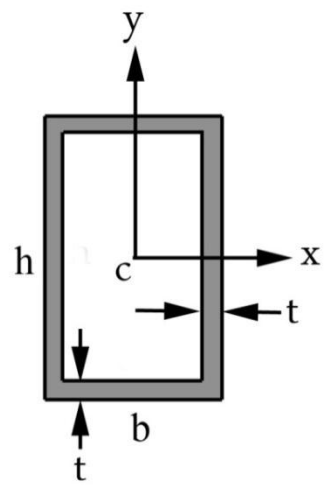

Figure 47: 4 by 4 Inch mechanical tubing cross-section

All equations for determining the maximum normal stress, the moment of inertia, the shear stress, the first moment, the maximum deflection and the safety factors are provided below. A diagram for the elastic curve analysis on the main top support beam *HI* is provided in Figure 48 and the result of the deflection as a function of beam length was plotted and provided in Figure 49.

Maximum Normal Stress:

$$\sigma_y > \ \sigma_{max} \ = \ \frac{M_{max} \ c}{I_x} \ [9]$$

Where,

$$I_x = \frac{b \ h^3}{12} - \frac{(b-2t)(h-2t)^3}{12} \quad \text{and} \quad c = \frac{h}{2} \quad [9]$$

Maximum Shear Stress:

$$\tau_{max} = \frac{V_{max} \ Q_{max}}{I_x \ t_w} \quad [9]$$

Where,

$$Q_{max} = \Sigma A\,\bar{y} \quad \text{and} \quad V = V_{max} \qquad [9]$$

Maximum Deflection:

$$y_{max} = \delta = \frac{2\,P\,L^3}{48\,E\,I} \qquad [9]$$

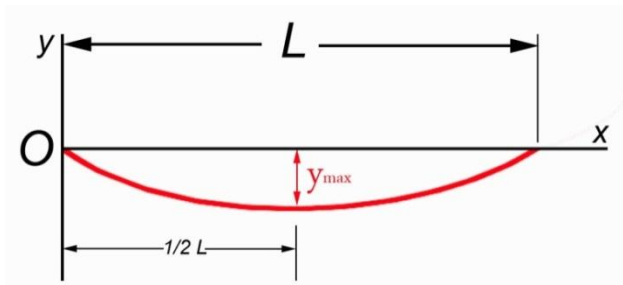

Figure 48: Elastic curve analysis diagram

The results of all main top support beam *HI* calculations and analysis, provided in TABLE XII, revealed a maximum applied stress σ_{all} of $1758psi$ ($1.213 \times 10^7 N$), a maximum deflection δ of $5.82 \times 10^{-3} in$ ($0.148\ mm$), a stress safety factor FS_{stress} of 33, a maximum shear stress τ_{max} of $362.33psi$ ($2.50MPa$) and a shear safety factor FS_{shear} of 58.

TABLE XII
4 BY 4IN SQUARE TUBING ANALYSIS

TOP 4 x $4in$ Square Tubing Stress, Shear and Deflection Analysis and Calculation Results		
Units	**Imperial**	**Metric**
Load *2P* (lb_f, N)	881.8	3924
Width *b* (in, mm)	4.000	101.6
Height *h* (in, mm)	4.000	101.6
Wall thickness t_w (in, mm)	0.3750	9.525
Length *L* (in, mm)	48.00	1219
Area *A* (in^2, m^2)	5.538	3.508×10^{-3}
Volume *V* (in^3, m^3)	261.0	4.277×10^{-3}
Mass *m* (lb, kg)	74.12	33.62
Price ($\$/in$, $\$/m$)	0.7408	29.17
Net Cost ($)	35.56	35.56
Moment M_{max} ($lb_f \cdot in$, $N \cdot m$)	10580	1196
Moment of Inertia I_x (in^4, m^4)	12.04	5.010×10^{-6}
Centroid *c* (in, mm)	2.000	50.80
Allowable Stress σ_{all} (psi, MPa)	1758	12.13
Safety Factor FS_{stress} (Non-Dim)	32.99	32.98
Deflection δ (in, mm)	5.821×10^{-3}	0.1479
Area A_1 (in^2, m^2)	1.500	0.9677×10^{-3}
Distance $\overline{y_1}$ (in, mm)	1.813	46.04
Area A_2 (in^2, m^2)	1.219	0.7863×10^{-3}
Distance $\overline{y_2}$ (in, mm)	0.8125	20.64
First Moment *Q* (in^3, m^3)	3.709	60.78×10^{-6}
Maximum Shear τ_{max} (psi, MPa)	362.3	2.499
Safety Factor FS_{shear} (Non-Dim)	57.96	58.02

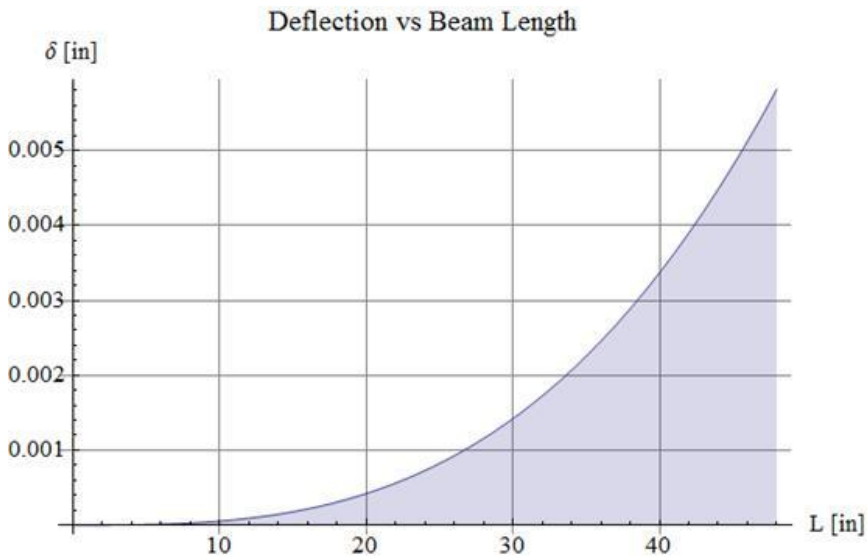

Figure 49: Top beam HI deflection as a function of length.

Examination of all calculation results for the top beam *HI* analysis suggests that the recommended top beam member can readily support the estimated combined live and dead loads. The top beam analysis also suggests that the resulting beam deflection is negligible and would in no way interfere with the operation of the drives and multi-axis modular systems.

A thorough analysis and calculations for the 4 by $4in$ square tubing side supports reactive forces, elongations and deflections were also performed. A diagram of the side support members *AC*, *DB* and *CE*, and of the reactive forces F_{BD} and F_{CE} is provided in Figure 50. The governing equations used to determine all moments and reactive forces are provided below. Algebraic expressions for the reactive forces F_{BD} and F_{CE} were determined and are also provided below. All other equations used for the side members' analysis were the same as those used for the top support member *HI*.

$$\Sigma M_x = 0 \qquad \Sigma F_x = 0 \quad and \quad \Sigma F_y = 0 \quad [9]$$

$$\text{Reactions:} \quad F_{BD} = \frac{P(L_{AB}+L_{BC})}{L_{BC}} \quad \text{and} \quad F_{CE} = \frac{P\ L_{AB}}{L_{BC}}$$

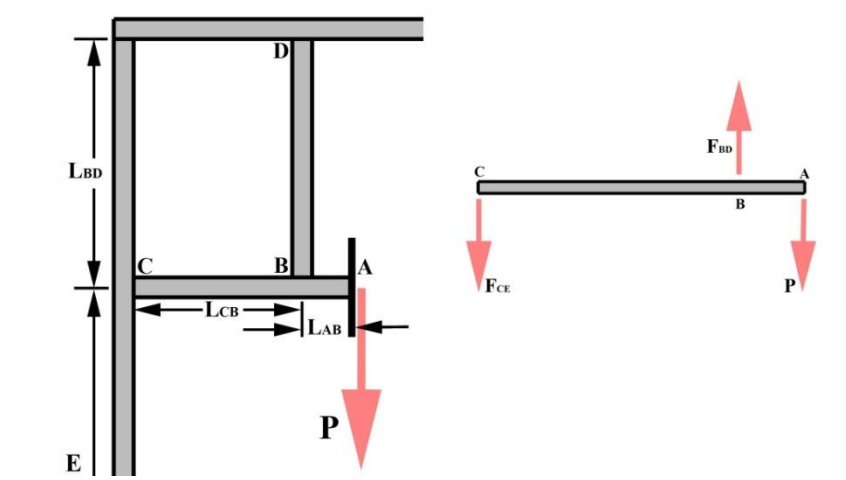

Figure 50: Side support members forces

An initial load *P* at each point *A* was evaluated with a mass $200kg$ (for all drives and modular systems). The resulting net applied force F_{BD} was $705.5psi$ $(3139N)$ on member *BD* and the net applied force F_{CE} was $264.6psi$ $(1177N)$ on member *CE*. Algebraic expressions for the elongations δ_{BD} and δ_{CE} on members *BD* and *CE* were determined and are provided below. The results of all force calculations revealed that the elongation δ_{BD} on member *BD* would be $136 \times 10^{-6} in$ $(3.5 \times 10^{-3}\ mm)$ and that the elongation δ_{CE} on member *CE* would be $123 \times 10^{-6}\ in$ $(3.1 \times 10^{-3}\ mm)$. Safety factors FS_{BD} and FS_{CE} for members *BD* and *CE* were also determined to be 447 and 1192 respectively.

Elongations δ_{BD} and δ_{CE} : $\delta_{BD} = \frac{F_{BD}\ \ L_{BD}}{E\ \ A_{BD}}$ and $\delta_{CE} = \frac{F_{CE}\ \ L_{CE}}{E\ \ A_{CE}}$

Safety Factors: $FS = \frac{\sigma_{ult}}{\sigma_{all}}$

Where: $\sigma_{all} = \frac{F_x}{A_x}$ [9]

$$FS_{BD} = \frac{\sigma_{ult}\ \ A_{BD}}{F_{BD}} \quad \text{and} \quad FS_{CE} = \frac{\sigma_{ult}\ \ A_{CE}}{F_{CE}}$$

The deflection at point *A* was also determined and while using an applied load of $200kg$. A deflection and deformation diagram is provided in Figure 51. The equations used to determine the resulting slope

θ for member *AC* and for the deflection δ_A at point *A* are provided below. All calculation results for the side support members are provided in Table XIII.

Slope of Member *AC*: $Slope\ \theta = \frac{\delta_{BD} + \delta_{CE}}{L_{BC}}$ and

Deflection at *A*: $\delta_A = \delta_{BD} + \theta\ L_{AB}$

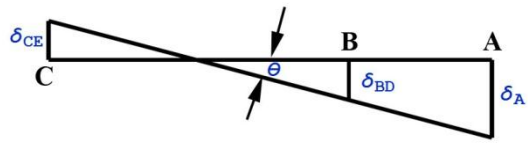

Figure 51: Deformation and deflection diagram

TABLE XIII
4 BY 4IN SQUARE TUBING ANALYSIS

$4\ by\ 4in$ Side Support Reactive Forces, Elongations and Deflections Analysis and Calculation Results		
Units	**Imperial**	**Metric**
Load *P* (lb_f, N)	440.9	1962
Length L_{AB} (in, mm)	3.000	76.20
Length L_{BC} (in, mm)	5.000	127.0
Length L_{BD} (in, mm)	30.33	773.4
Length L_{CE} (in, mm)	73.33	1862
Area A_{BD} (in^2, m^2)	5.438	3.508×10^{-3}
Area A_{CE} (in^2, m^2)	5.438	3.508×10^{-3}
Force F_{BD} (lb_f, N)	705.5	3139
Force F_{CE} (lb_f, N)	264.6	1177
Elongation $\delta_{BD}(in, mm)$	135.7×10^{-6}	3.447×10^{-3}
Elongation δ_{CE} (in, mm)	123.0×10^{-6}	3.125×10^{-3}
Slope θ (Non-Dim)	51.74×10^{-6}	51.75×10^{-6}
Deflection δ_a (in, mm)	290.9×10^{-6}	7.390×10^{-3}
Safety Factor FS_{BD} (Non-Dim)	447.0	447.0
Safety Factor FS_{CE} (Non-Dim)	1192	1192

Inspection of all calculation results for the side support beams *AC*, *DB* and *CE* analysis suggests that the proposed structural side beam members' design can easily support an estimated combined live and dead load of$200kg$. The side beams' analysis also suggests that the resulting beam elongations δ_{BD} and δ_{CE} on members *BD* and *CE* are negligible and as in the case of the top support member *HI*, would in no way interfere with the operation of the drives and modular systems. The side beams' analysis also suggests that the resulting beam deflection at point *A* is minimal and would again not interfere with the operation of the drives and modular systems. The safety factors obtained during the side support beams' *AC*, *DB* and *CE* analysis also suggest that the recommended design is more than capable of supporting all imposed loads.

4.6 Arm Clamp

To ensure the rotated panel does not move when the second panel is being moved and positioned over the first panel, a device to hold the panels needed to be designed. To accomplish this, it was decided to use a rotatory drive from FESTO to rotate an arm with a rubber stop. The arm chosen was a $400mm$ long piece of $20mm$ square stock ASTN A36 steel with a thickness of $2mm$, the mass of the arm would be determined by the following equation, where the density of the steel is $7860kg/m^3$ [4].

$$Mass = \rho V = (400\text{mm})\left[(20\text{mm})^2\left(20mm - 2(2mm)\right)^2\right]\left(7.86 \times \frac{10^{-6}kg}{mm^3}\right)$$
$$Mass = 0.453kg$$

Using the following formula it is possible to derive the torque needed to raise the arm.

$$T = \frac{L}{2}mg = \frac{0.400m}{2}(0.453kg)\left(9.81\,{}^{m}/_{s^2}\right) = 0.889N \cdot m \text{ [10]}$$

The drive chosen was the FESTO DSM-12-270-P-FW-A-B, which can be adjusted to rotate between specific angles with adjustable cushioning rings, to a maximum rotation of 270° [16]. At a supply air pressure of $6\ bar$, the motor has a torque of $1.25N \cdot m$, which is ideal for the arm specified. An image of the arm clamp design can be viewed in Figure 52.

Figure 52: Arm clamp design with rotary motor, square stock arm and rubber stop [16]. ***Used with Permission***

In operation, the arm would lower onto the panel, with the rubber stop directly over the support rail, holding the panel in place. The cushioning rings should be set such that the arm can only travel slightly more than 90°, from a straight vertical position to slightly below the table height. The arm travel range may need some adjustment in the prototype stage, to maintain a proper hold against the support rail. With this operation, the panel will not move and proper alignment will be ensured.

5. Operation

The operation of the automated panel rotation machine starts from the roll forming process. As the panel comes out of the roll former the panel will be grasped by the front gripper of the crane design. This action is performed by a pneumatic gripper. The gripper will move at the same speed as the roll former until the roll former die is triggered and separates the first panel from the second panel. The horizontal movement is managed by the linear gantry. At this point the front arm will move the panel a short distance away from the second panel so that the rear arm can position itself at the back flange of the panel. This rear arm is moved by the second linear gantry. The panel will be raised, front and rear simultaneously to lift the entire panel off the bed. This vertical motion is provided by the vertical arm of the linear gantry. At this point the panel will be moved down the entire table. At this far end of the table, the first panel will be rotated 180° by means of the pneumatic drive that drives the gripper. Once the panel has been fully rotated the panel will be set down on the bed. The panel will be secured by two rotating clamps, the arm clamps, which are on two motorized drive. The arm clamps will ensure that the panel will not be moved as other operations are being performed.

The arms at this point retract and move back to the front of the roll former. The back arm is lifted as to not obstruct the second panel as it leaves the roll former. The front arm again grabs the front flange of the panel and moves at the same speed as it leaves the roll former. The panel is moved away from the roll former when the die is triggered and the back arm is moved into position. The gripper is than closed on the back flange. The hinged arm clamps on the bottom panel are lifted and the second panel is placed directly on top of the first panel at the end of the table. The arm clamp lowers and the front and rear grippers release the panel and prepare for the next panel exiting the roll former. From this point the panels are gripped by the rear spot welder clamp and the arm clamp rises. The rear spot welder clamp will move the panels slowly into the front spot welder clamp, located just past where the panels were set down. The panels are than secured by the clamps on both ends. At this point the panels will be moved into the spot welding process.

5.1 Time Analysis

A time analysis was conducted to help determine the time required for all steps within the automated panel handling operations. It was critical that all panel handling motions be synchronized. It was also important that the gantry arms pick up, rotate and move the first of every two panels into the indexing

position and return to the roll former in sufficient time to pick up the next panel as it came out of the roll form press.

Because of the varying panel lengths, panel handling time requirements could fluctuate. The process speeds and time requirements for the varying panel lengths are detailed in TABLE XIV. Although the time analysis directly relates to the gantry control systems, which is outside the scope of this project, it was nonetheless necessary that the machine component operation times be able to match the minimum panel forming times. This design time requirement was important when considering and specifying the machine components. A process time analysis was required in an effort to determine correct component specification, such as motors and actuators, and in order to provide smooth and reliable operation of the machine.

TABLE XIV
ROLL FORMING PROCESS SPEED AND TIMES [2]

Roll Forming Process		
Specification	**Value**	**Metric**
Processing Speed		
$1000mm$ panel	25	mm/s
$2000mm$ panel	33.3	mm/s
$3000mm$ panel	30	mm/s
$4000mm$ panel	28.6	mm/s
Spacing Between Panels		
$1000mm$ panel	40	Sec
$2000mm$ panel	60	Sec
$3000mm$ panel	100	Sec
$4000mm$ panel	140	Sec

TABLE XV and XVI detail the automated machine motion sequences, as well as the times required to perform all panel handling operations. The times estimated within TABLE XV and XVI also allow calculating the total panel handling time. Each estimated panel handling time requirement was determined while assuming the machine components performed their operations at slower than specified speeds. The Standard LP 50 linear gantry cycle time specifications were obtained from the

FESTO website [15]. The Standard LP 50 linear gantry vertical and horizontal axis stroke times were obtained from the EGC- 185-BS-KF and 2x EGC- 185 - TB – KF actuator specifications.

At the beginning of the panel handling process, both vertical arms are located immediately in front of the roll former. The grippers are also situated at a height of $20cm$ above the panel bed at the beginning of the panel handling process. The time analysis shown in TABLE XV and XVI below are based on the 1000 and $2000mm$ panel forming times. The $1000mm$ panel has the shortest forming time at 40 seconds, while the $2000mm$ panel has the highest forming time at 60 second. For the purpose of the machine design, analysis of the 1000 and $2000mm$ panel forming times was sufficient, because all other panels require longer forming times and have slower process speeds. By extension, machine components with specifications capable of meeting the 1000 and $2000mm$ panel forming time requirements, will also be able to accommodate the 3000 and $4000mm$ panel forming time requirements.

TABLE XV
TIME ANALYSIS FOR A 1000MM PANEL

Step #	Description	Time (Sec)
1	Front arm comes down to panel level	1
2	Front gripper grabs the front of the panel	1
3	Front arm drags the panel forward until its entire length is on the panel bed	1.5
4	Rear arm comes down to panel level	1
5	Rear gripper grabs the rear of the panel	1
6	Both arms lift the panel	1
7	Grippers rotate the panel	1.5
8	Both arms move the panel horizontally towards the spot welder	10
9	Both arms lower the panel onto the panel bed	1
10	Panel locator arms swing in from beside the panel bed and hold the panel	2
11	Grippers release the panel and arms move outwards to clear the panel	2
12	Arms move up to clearance height	1
13	Both arms move horizontally back to their start positions	10
	Total	34

TABLE XVI
TIME ANALYSIS FOR A 2000MM PANEL

Step #	Description	Time (Sec)
1	Front arm comes down to panel level	1
2	Front gripper grabs the front of the panel	1
3	Front arm drags the panel forward until its entire length is on the panel bed	2.5
4	Rear arm comes down to panel level	1
5	Rear gripper grabs the rear of the panel	1
6	Both arms lift the panel	1
7	Grippers rotate the panel	1.5
8	Both arms move the panel horizontally towards the spot welder	9
9	Both arms lower the panel onto the panel bed	1
10	Panel locator arms swing in from beside the panel bed and hold the panel	2
11	Grippers release the panel and arms move outwards to clear the panel	2
12	Arms move up to clearance height	1
13	Both arms move horizontally back to their start positions	9
	Total	33

As indicated in TABLE XIV , XV and XVI, the 1000 and $2000mm$ net panel handling times of 33 and 34 seconds are less than the 40 and 60 second panel forming times displayed in TABLE XIV. The time analysis suggests that the gantry arms will perform all panel handling operations and return to position in front of the roll former before the next panel exits the roll former. The time analysis also confirms that the specified components are capable of operating at speeds exceeding panel forming speeds.

6. Manufacturing Principles

As most components in this design are supplied by FESTO, the manufacturability has been greatly simplified. Most components will simply bolt on to each other; this reduces labour costs by taking less time than welding and also requires less qualified laborers. FESTO manufactures mounting plates and adapter kits that will be fully utilized, to ensure proper connections and minimize in-house metal work.

The arm clamp, for example, will require cutting a section of square stock to size, drilling three bolt holes and mounting. The rubber knob may require some milling and shaping depending on what is available.

The assembly of this design should abide by the following order:

1) Weld frame supports together
2) Prepare supports by drilling bolt holes
3) Bolt linear gantry to supports via baseplates on linear gantry
4) Attach gripper Jaws to gripper
5) Mount grippers to rotary motor using adapter
6) Mount gripper/motor assembly to the linear gantries' vertical actuator using an adapter kit from FESTO
7) Assemble arm clamp and mount to frame
8) Run pneumatic and electrical lines

The most complex manufacturing process will be cutting and welding of the support frames. For each support, 14 welds will be required. All 14 welds are on corner joints, which require fillet welds [18]. As the supports are made of a low-alloy steel, arc or oxyacetylene welding is recommend. The square stock will need to be cut to size, as metal retailers typically do not stock an endless supply of lengths. As the assembly procedures are common manufacturing processes, no new training is required. MTM staff should be familiar with all aspects of the machine's construction from their experience with fabricating other MTM machinery.

7. Cost Analysis

A thorough cost analysis and bill of material was required to evaluate the cost of the design. Since no strict budget constraints were given, there were no upper bounds on the cost. Although a maximum cost was not specified, there was a desire to produce a design that is cost efficient and meets all the requirements set forth. Considering that the cost analysis and bill of materials complement each other, both will be presented in Table XVII.

To complete a cost analysis, an estimate of manufacturing time is required. If a 40 hour work week is assumed, a conservative estimate for cost calculations would be a completed construction by four employees in one week, for a total of 120 man hours. Furthermore, an estimate of the time needed to advance the development of this design into a physical, sellable unit was made and a cost to this time attached. Estimating the required needs of a draftsperson for 40 hours at $90.00/hr, an engineer for 40 hours at $250.00/hr and finally a skilled machinist for 100 hours at $100.00/hr resulted in a development cost of $23,600.00. The development cost will not be included in the per unit total cost, as it would be dispersed over the total number of units sold.

A request was made for component costs from various suppliers, but responses in most cases are still pending. Due to the lack of firm cost figures, an estimate was made, using previous knowledge and experience, of the various component costs. Conservative cost values were selected, such that the final cost calculated will be at the higher end of the expected cost scale. When including the cost estimates and the manufacturing labour, the final cost per unit was estimated to be $64,106.80.

TABLE XVII
DETAILED COST ANALYSIS FOR DESIGN

Item	Quantity	Cost/Unit	Total Item Cost
Materials/Components			
Steel square tubing *est.**	$200ft$	$5.00	$1,000.00
Steel plate *est.*	12	$10.00	$120.00
Linear gantry *est.*	2	*Pending*	$20,000.00
Drive mount [19]	2	$4.58	$9.16
Pneumatic drive [19]	2	$4,563.32	$9,126.64
Gripper/drive connection *est.*	2	*Pending*	$50.00
Gripper [19]	2	$1,846.12	$3,692.24
Gripper top jaw material *est.*	2	$50.00	$100.00
Gripper bottom material *est.*	2	$50.00	$100.00
Swivel module [19]	2	$329.43	$658.86
Bolts for securing linear gantry *est.*	48	$1.50	$72.00
Blots to secure support to the ground *est.*	48	$1.50	$72.00
Pneumatic hoses *est.*	16	$75.00	$1,200.00
Total Cost			$36,200.60
Manufacturing and Development Costs			
Labour *est.*	120 hours	$100.00	$12,000.00
Development Time *est.*	180 hours	Varied	$23,600.00
Total Cost			$35,600.00
Correction Factor of 33% Added On			
Total Projected Cost			$64,106.80

**est.* denotes an estimated cost.

7.1 Break Even Analysis

As this design is intended to be manufactured by MTM and then directly sold, a detailed multi-year break even analysis is not required as MTM will not be using and maintaining the product [20]. For MTM to break even, it simply needs to sell the product for more than it costs to purchase components and build. From the cost summary above, this would be $128,213.60 with a typical retail markup of 100%. Of course MTM does not sell retail and their markup will depend on their specific overhead, which is not within the scope of this report. A more traditional break even analysis could be completed for a client of MTM buying the machine to replace one or more human workers, but again this is not in the scope of this report as MTM's clients are quite variable and each located in very different economic environment.

8. Limitations

Due to the complexity of an integrated system like the one that has been presented, there are a number of considerations that must be mentioned. These considerations will be things that need to be analyzed and pursued further to obtain the required information.

The first limitation that caused a number of other considerations to arise was the lack of information on the linear gantry. Because the linear gantry needed for the longest panel is a newer model of an existing linear gantry, there was little specific information on it. It should perform the function it is intended to, but things such as the baseplate for mounting were not detailed. It was uncertain if it is supported at each end by two baseplates or if there are numerous baseplates that run the length of the linear gantry, with the latter being assumed in this report. With this assumption it allows the design to be more rigorous because it will have more support and the loads on the supports will be lessened.

Another consideration that was not clear with the linear gantry is how the pneumatic hoses and electrical lines will be incorporated into the design. The design presented in this report has been given some clearance on the sides of the linear gantry to allow for the cabling to be installed.

The connection of the pneumatic drive to the vertical arm of the linear gantry is another component with little information. Again this is because the linear gantry is new and there was not a lot of information on the connectors available for the system. This was a common problem in trying to specify adapter kits and connection because FESTO does not provide a lot of information on what components work with other components. A representative from FESTO would have to be consulted, during the development phase, in order to be entirely certain of all the connections.

The SolidWorks model was built using some approximations due to the lack of the information above and is therefore more of a reference to how the system will work and be put together than a definite representation of the real machine. As well, cost analysis performed is an approximation and uses the resources that were available to the team.

Some development time will be required to ensure the functionality of the design. The FEA models will have to be verified with empirical tests of the design.

9. Discussion and Conclusion

Micro Tool and Machine Ltd. presented a design challenge for the MECH 4860 Engineering design course at the University of Manitoba. The design challenge involved conceptualizing an automated machine process capable of moving, rotating and orienting transformer radiator panels between two machine operations and within a transformer radiator manufacturing assembly line setting. The members of Team 15 were able to complete and propose a machine design which met MTM's needs.

As was suggested within this report, the team's proposed design consists of a steel support structure, similar to a crane, onto which purchased pre-manufactured components and drive systems are mounted. All drives and modular components are intended to perform a particular task. The machine design components included grippers, gripper jaws, pneumatic drives, linear gantries and a support frame. Most pre-manufactured components devices are available from a machine supplier named FESTO, a company from which MTM regularly purchases application specific components.

During the design process, analysis of all panel handling induced static and dynamic forces were performed. The panel clamping static and dynamic forces were obtained and allowed determining correct gripper forces, motor torque and lifting force specifications. The static and dynamic force analyses were required to help determine whether the panel handling procedures and forces might potentially permanently deform the panels. The maximum forces generated by the panel handling processes were found to be below the panel material yield stresses and it was concluded that no permanent panel deformation would occur during any panel handling procedure.

An analysis of the gripper jaw properties and limitations was also performed. The gripper jaw components needs to be functional, strong and failsafe. In the final analysis, the gripper jaws were rated with a safety factor of 15, making them unlikely to fail. Because the top gripper jaw is designed with a beveled edge, the gripper jaws can effectively and reliably center and pick up the panels. The gripper jaws are also designed to accommodate those panels which might exit the roll former with a slight skew, or those that are slightly off axis. The proposed grippers are therefore, more than capable of performing the required tasks.

FESTO gripper actuators were also specified in the grippers section and were designed to drive the panel rotation actions. The actuators are capable of generating vertical and horizontal gripping forces exceeding those obtained within the panel analysis. The pneumatic drive and linear gantry proposed

within the design are also available from FESTO. Both pneumatic drive and linear gantry components selection processes were based upon their respective component forces analyses. It was determined that the pneumatic drive and linear gantry components far exceeded the minimum panel handling requirements. Because of the recent product launch and limited part specification availability, a comprehensive force analysis could not be completed for the FESTO linear gantry components. Nonetheless, based on maximum effective load specifications, it was possible to rate the FESTO linear gantries with a safety factor of 2.

Having defined and specified all modular components, a rigid and functional steel frame structure was designed and analyzed to support and mount all machine components. Aside from obtaining a functional steel frame, important frame design objectives included the ability to support dead and live loads, the minimization of frame deflections and the minimization of material use and assembly costs. Frame deflections needed to be kept at a minimum to ensure proper linear gantry operation. The highest deflection value within any frame member was evaluated at 5.82 thousandth of an inch, while the lowest structural member safety factor was 33. Structural frame analysis results showed that the proposed frame design was more than capable of handling any of the static or dynamic loads imposed by the drives, modular components and panels.

As primary design requirement, the proposed machine design can automate and perform the movement, rotation and orientation of radiator panels between the roll form press and the spot welder. A comprehensive finite element analysis (FEA) and structural analyses on the designed major components was carried out to confirm structural integrity and service reliability of these components. A CAD model, a machine design animation and a poster of the machine assembly and its individual components were also provided to assist in visualizing the proposed design. In conclusion, the team is confident that their proposed machine design can thoroughly meet all of MTM's design project objectives, that it can satisfy all design project requirements and that it can fulfill all course objectives.

10. Works Cited

[1] Micro Tool & Machine Ltd. (2011). *About MTM* [Online]. Available: http://mtmmachines.ca/about-2/ [October 11, 2011].

[2] G. Atamanchuk. (2011, Sept. 23). "Client introduction and information meeting." Personal e-mail.

[3] G. Atamanchuk. (2011, Sept. 27). "RE: Client introduction and information meeting." Personal e-mail.

[4] MatWeb. (2011). *ASTM A36* [Online]. Available: http://www.matweb.com/search/DataSheet.aspx?MatGUID=d1844977c5c8440cb9a3a967f8909c3a&ckck=1 [October 15, 2011].

[5] FESTO. (2011). *Standard Handling Systems* [Online]. Available: http://www.festo.com/cms/nl-be_be/19604.htm [November 18, 2011].

[6] FESTO. (2011). *Welcome to Festo Canada* [Online]. Available: http://www.festo.com/cms/en-ca_ca/index.htm [November 12, 2011].

[7] P. Labossiere. (private communication), Nov. 21, 2011.

[8] Dassault Systèmes. *SolidWorks 2011.* Waltham, MA: Dassault Systèmes, 2011.

[9] F. Beer, E. Johnston, J. DeWolf, and D. Mazurek. *Mechanics of Materials,* 5th ed. New York: McGraw Hill, 2009.

[10] J. Meriam and L. Kraige. *Engineering Mechanics: Dynamics*, 6th ed. USA: John Wiley & Sons Inc., 2007.

[11] Carbide Depot. (2011). *Coefficient for static friction of steel* [Online]. Available: http://www.carbidedepot.com/formulas-frictioncoefficient.htm. [November 19, 2011].

[12] FESTO. (2011, March). *Parallel grippers HGPT* [Online]. Available: https://www.festo.com/cat/en-ca_ca/data/doc_engb/PDF/EN/HGPT-B_EN.PDF [November 15, 2011].

[13] FESTO. (2009, December). *Drive-Gripper Connectors* [Online]. Available: https://www.festo.com/cat/en-ca_ca/data/doc_engb/PDF/EN/DRIVE-GRIPPER-CONNECTORS_EN.PDF [November 15, 2011].

[14] FESTO. (2011). *Semi-rotary drive DRQD-16...32* [Online]. Available: http://www.festo.com/pnf/en-ca_ca/products/catalog?action=search&key=drqd [November 19, 2011].

[15] FESTO. (2011). *DHSL-15* [Online]. Available: https://www.festo.com/cat/en-ca_ca/data/doc_engb/PDF/EN/DHSL-15_EN.PDF [November 20, 2011].

[16] FESTO. (2008, October). *Semi-rotary drives DSR/DSR* [Online]. Available: http://www.festo.com/cat/en-ca_ca/data/doc_engb/PDF/EN/DSR_EN.PDF [Accessed 24 November 2011].

[17] Wolfram, *MATHEMATICA 7,* Champaign, IL: Wolfram, 2010.

[18] E. Degarmo, J. Black and R. Kohser. *Materials and Processes in Manufacturing*, 9th ed. Hoboken, NJ: John Wiley & Sons, Inc., 2003.

[19] G. Atamanchuk. (2011, Nov. 29). "RE: Requested Quote." Personal e-mail.

[20] J. Riggs, D. Bedworth, S. Randhawa and A. Kahn. "Chapter 12: Break-Even Analysis," in *Engineering Economics*, Second Canadian Edition. Toronto, ON: McGraw-Hill Ryerson Ltd., 1997, pp. 507-545.

[21] D. Gagnon, B. McKay, M. Machungwa and G. Stewart, *Concept Design Report*, Revolve Consulting, Winnipeg, MB, 2011.

Appendix A

Appendix A contains the dimensions for the Top gripper jaw and the bottom Gripper Jaw. All dimensions are in millimeters.

Bottom Jaw

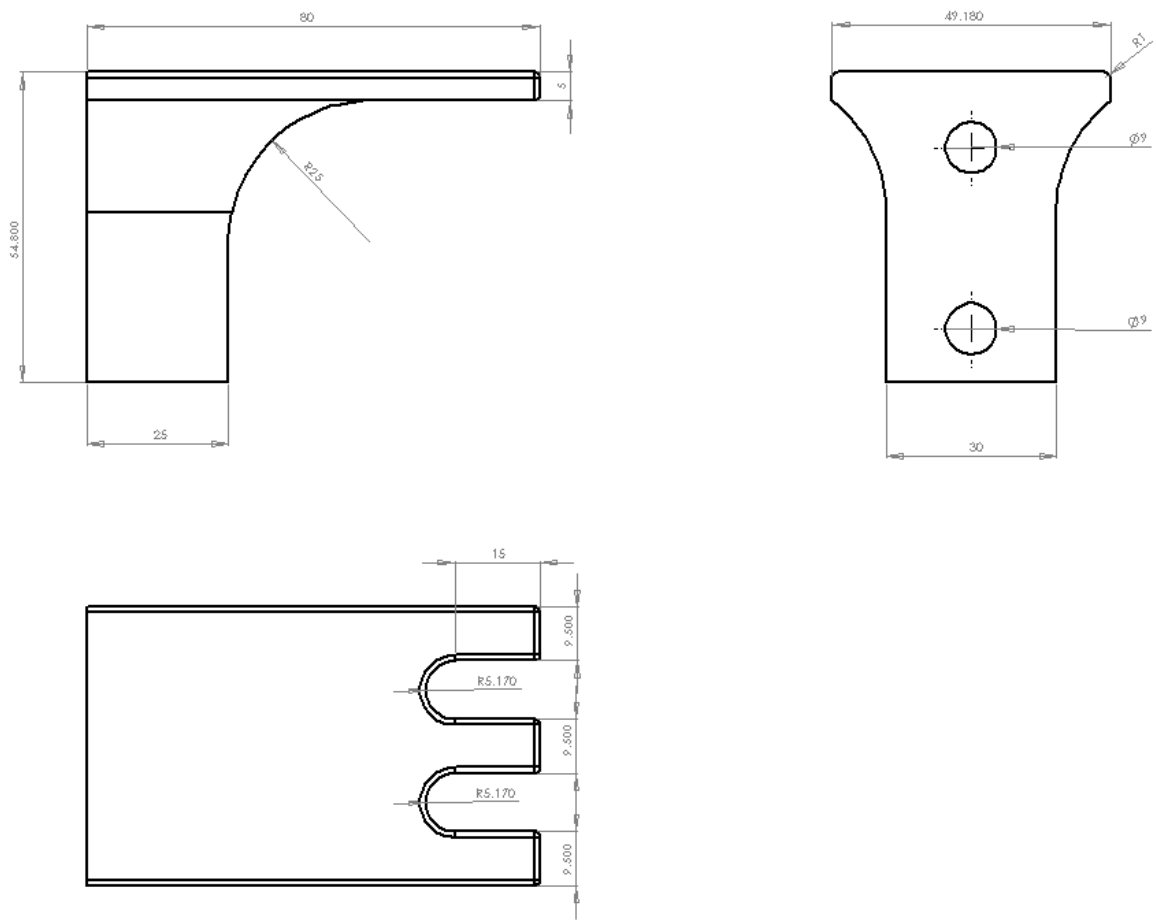

Top Jaw

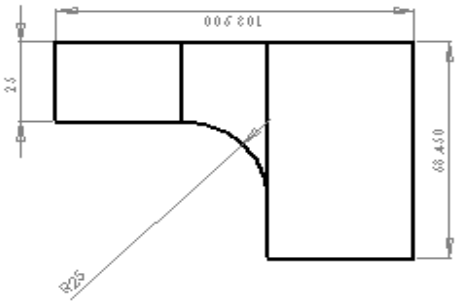

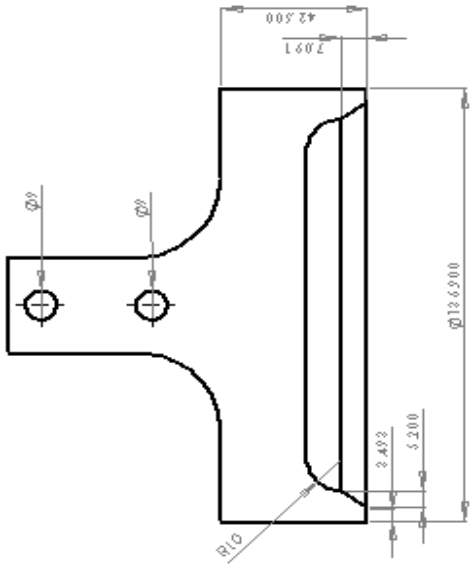

Appendix B

Appendix B contains the output pages, including all equations used and representative figures, of the MATHMATICA analysis of the structural frame.

MAIN SUPPORT FRAME STRUCTURAL DESIGN MODELING AND OPTIMIZATION

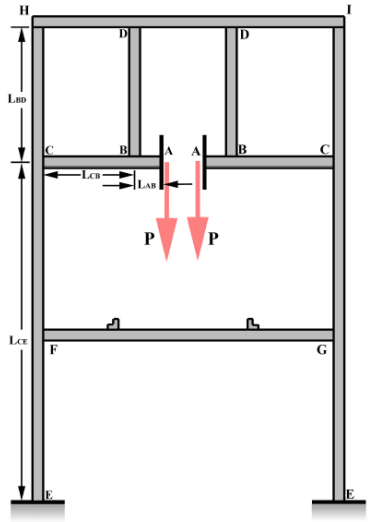

TOP MAIN SUPPORT BEAM

ASTM-A36 Steel Material Properties

ASTM-A36	$\rho\{\frac{lb}{in^3}, \frac{kg}{m^3}\}$	σ_{Ult} {psi,Pa}	σ_Y Tension{psi,Pa}	σ_Y Shear{psi,Pa}
Imperial	0.284	58 000.	36 000.	21 000.
Metric	7860	$4.\times 10^8$	2.5×10^8	1.45×10^8

ASTM-A36	E {psi,Pa}	G {psi,Pa}
Imperial	2.9×10^7	1.12×10^7
Metric	$2.\times 10^{11}$	7.72×10^{10}

Top Beam Loading Diagram

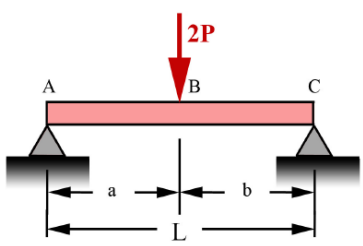

Top Beam Load and Dimension Variables

Variables	2P {lbf,N}	L{in,m}	a{in,m}	b{in,m}
Imperial	881.849	48.	24.	24.
Metric	3924.	1.2192	0.6096	0.6096

Reactions

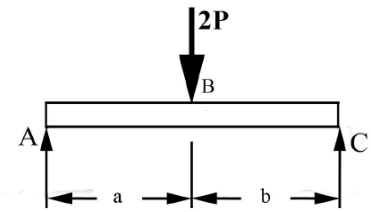

$\Sigma M_C = 0 \qquad A\,L - 2\,P\,b = 0 \qquad A = \frac{2\,P\,b}{L}$

$\Sigma M_A = 0 \qquad C\,L - 2\,P\,a = 0 \qquad C = \frac{2\,P\,a}{L}$

From A to B $\quad 0 < x < a$

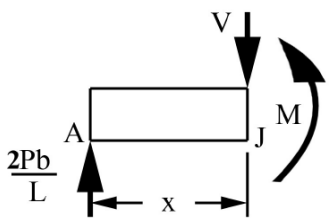

$\Sigma F_y = 0 \qquad \frac{2\,P\,b}{L} - V = 0 \qquad V = \frac{2\,P\,b}{L}$

$\Sigma M_J = 0 \qquad M - \frac{2\,P\,b}{L}\,x = 0 \qquad M = \frac{2\,P\,b}{L}\,x$

From B to C $\quad a < x < L$

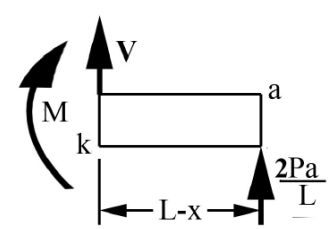

$\Sigma F_y = 0 \qquad \frac{2\,P\,a}{L} + V = 0 \qquad V = -\frac{2\,P\,a}{L}$

$\Sigma M_K = 0 \qquad -M + \frac{2\,P\,a}{L}\,(L - x) = 0, M = \frac{2\,P\,a}{L}\,(L - x)$

$M = \frac{2\,P\,a\,b}{L}$ **At Section B**

Shear Diagram

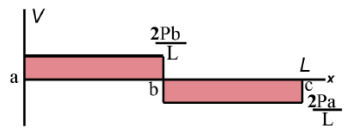

Shear	2P {lbf,N}	L{in,m}	a{in,m}	b{in,m}	R_A {lbf,N}	R_B {lbf,N}	V_{Max} {lbf,N}
Imperial	881.849	48.	24.	24.	440.925	440.925	440.925
Metric	3924.	1.2192	0.6096	0.6096	1962.	1962.	1962.

Bending-Moment Diagram

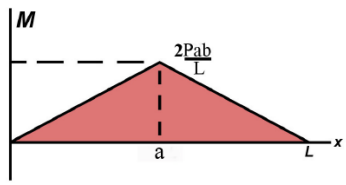

Bending	2P {lbf,N}	L{in,m}	a{in,m}	b{in,m}	M_{max} {lbf*in,N*m}
Imperial	881.849	48.	24.	24.	10 582.2
Metric	3924.	1.2192	0.6096	0.6096	1196.04

Elastic Curve Diagram

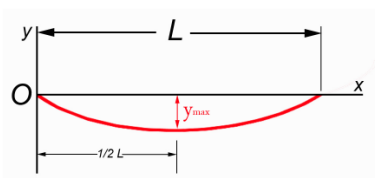

Maximum Deflection

$$y = \delta = \frac{2\,PL^3}{48\,EI} \leq \delta_{\max} = y_{\max}$$

Top Support Hollow Box (Square Tubing) Calculations

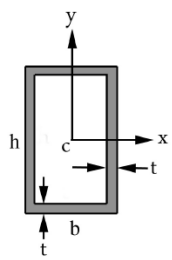

Area $A = 2t(h+b-2t)$

Max Normal Stress $\sigma_y > \sigma_{max} = \frac{M_{max}\, c}{I}$ where $I_{x'} = \frac{b\, h^3}{12} - \frac{(b-2\,t)\,(h-2\,t)^3}{12}$ $I_{y'} = \frac{b^3\, h}{12} - \frac{(b-2\,t)^3\,(h-2\,t)}{12}$

Max Shear Stress $\tau_{max} = \frac{V\, Q_{max}}{I_{x'}\, t_w}$ $Q_{max} = \Sigma\, A\, \bar{y}$ $V_{max} = P$

Max Deflection $\delta = \frac{2\, P\, L^3}{48\, EI}$ $\sigma_{all} = \frac{\sigma_{ult}}{S\, F}$

Hollow Box 4"x 4" (Square Tubing)

Hollow Box	b{in,m}	h{in,m}	t{in,m}	L_{HI} {in,m}	A{in^2,m^2}	V{in^3,m^3}	Mass{lb,kg}
Imperial	4	4	0.375	48.	5.4375	261.	74.124
Metric	0.1016	0.1016	0.009525	1.2192	0.00350806	0.00427702	33.6174

HollowBox	Price{$/in,$/m}	NetCost{$}	2P{psi,N}	M_{max} {lbf*in,N*m}
Imperial	0.740833	35.56	881.849	10582.2
Metric	2.70967	3.30363	3924.	1196.04

HollowBox	$I_{x'}$ {in^4,m^4}	$I_{y'}$ {in^4,m^4}	c{in,m}	σ_n {psi,Pa}	SF{non-dim}	δ {in,m}
Imperial	12.0361	12.0361	2	1758.4	32.9845	0.00582092
Metric	5.00982×10^{-6}	5.00982×10^{-6}	0.0508	1.21279×10^{7}	32.9818	0.000147863

HollowBox	A_1 {in^2,m^2}	$\bar{y}_1$ {in,m}	A_2 {in^2,m^2}	$\bar{y}_2$ {in,m}	Q=ΣA$\bar{y}$ {in^3,m^3}	τ_{max} {psi,Pa}	SF_{Shear} {Non-D:
Imperial	1.5	1.8125	1.21875	0.8125	3.70898	362.327	57.9587
Metric	0.00096774	0.0460375	0.000786289	0.0206375	0.0000607794	2.49901×10^{6}	58.0229

Shear, Moment and Deflection Plots

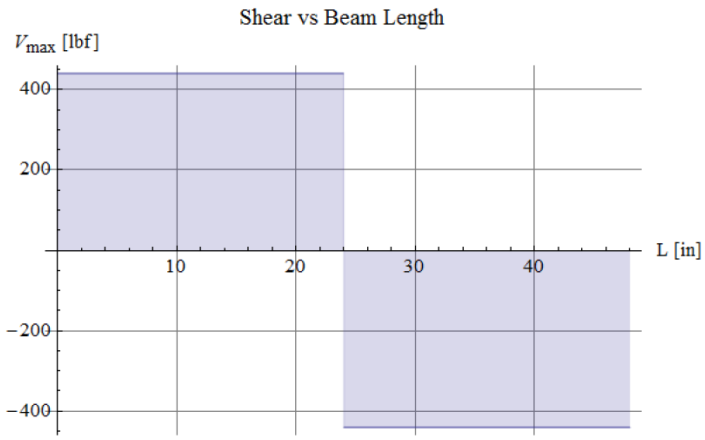

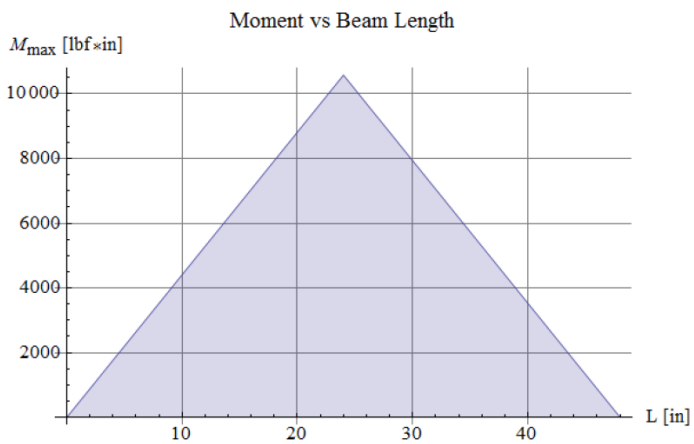

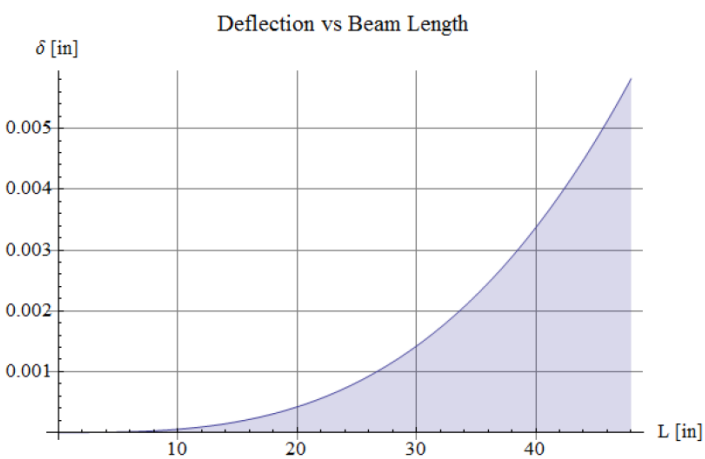

SIDE SUPPORT BEAMS

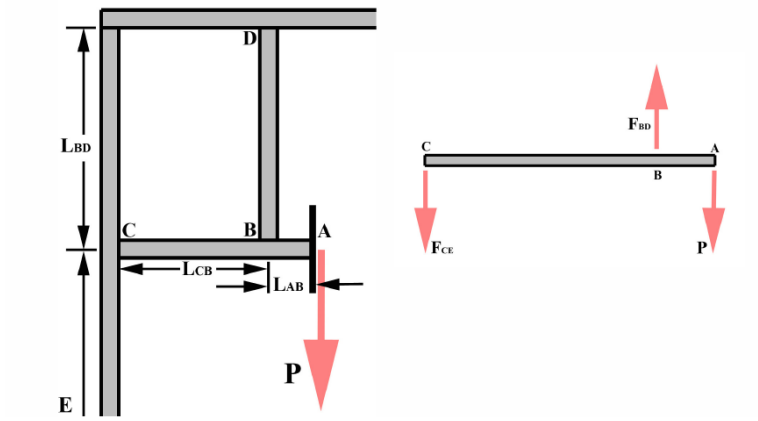

Material Properties, Dimensions and Load (for 4" x 4" mechanical tubing):

ASTM-A36	$\rho\{\frac{lb}{in^3}, \frac{kg}{m^3}\}$	σ_{Ult} {psi,Pa}	σ_Y Tension{psi,Pa}	σ_Y Shear{psi,Pa}
Imperial	0.284	58 000.	36 000.	21 000.
Metric	7860	$4.\times10^8$	2.5×10^8	1.45×10^8

ASTM-A36	E {psi,Pa}	G {psi,Pa}
Imperial	2.9×10^7	1.12×10^7
Metric	$2.\times10^{11}$	7.72×10^{10}

Variables	P {lbf,N}	L_{AB} {in,m}	L_{BC} {in,m}	L_{BD} {in,m}	L_{CE} {in,m}	A_{BD} {in^2,m^2}	A_{CE} {in^2,m^2}
Imperial	440.925	3.	5.	30.33	73.33	5.4375	5.4375
Metric	1962.	0.0762	0.127	0.770382	1.86258	0.00350806	0.00350806

Reactions:

$\Sigma M_C = 0 \qquad -P(L_{AB} + L_{BC}) + F_{BD} \times L_{BC} = 0 \qquad F_{BD} = \frac{P(L_{AB} + L_{BC})}{L_{BC}}$

$\Sigma M_B = 0 \qquad -P \times L_{AB} + F_{CE} \times L_{BC} = 0 \qquad F_{CE} = \frac{P \times L_{AB}}{L_{BC}}$

Elongations of Members BD and CE:

$\delta_{BD} = \frac{F_{BD} \times L_{BD}}{E \times A_{BD}} \qquad \delta_{CE} = \frac{F_{CE} \times L_{CE}}{E \times A_{CE}}$

Variables	P {lbf,N}	F_{BD} {lbf,m}	F_{CE} {lbf,N}	δ_{BD} {in,m}	δ_{CE} {in,m}
Imperial	440.925	705.479	264.555	0.000135694	0.000123027
Metric	1962.	3139.2	1177.2	3.4469×10^{-6}	3.12514×10^{-6}

Deflections at A:

Deformation Diagram

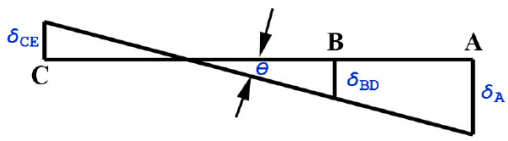

Slope $\theta = \frac{\delta_{BD} + \delta_{CE}}{L_{BC}}$ $\qquad \delta_A = \delta_{BD} + \theta \times L_{AB}$

Variables	θ {Non-Dim}	δ_{BD} {lbf, m}	L_{AB} {in, m}	δ_A {in, m}
Imperial	0.0000517441	0.000135694	3.	0.000290926
Metric	0.0000517483	3.4469×10^{-6}	0.0762	7.39012×10^{-6}

Safety Factors:

$SF = \frac{\sigma_{ult}}{\sigma_{all}}$ **where** $\sigma_{all} = \frac{F_x}{A_x}$ $\qquad$ *therefore* $SF_{BD} = \frac{\sigma_{ult} A_{BD}}{F_{BD}}$ *and* $SF_{CE} = \frac{\sigma_{ult} A_{CE}}{F_{CE}}$

Variables	σ_{Ult} {psi, Pa}	F_{BD} {lbf, m}	F_{CE} {lbf, N}	A_{BD} {in^2, m^2}	A_{CE} {in^2, m^2}	SF_{BD}	SF_{CE}
Imperial	58 000.	705.479	264.555	5.4375	5.4375	447.037	1192.1
Metric	$4. \times 10^8$	3139.2	1177.2	0.00350806	0.00350806	447.	1192.

Appendix C

Appendix C contains a brief overview of the final design selection process [21]. The following table contains the original top five design concepts.

TABLE C1
FIVE TOP CONCEPTS WITH DESCRIPTION AND DRAWING [21]

Title	Description	Drawing
Arm Clamp Panel Flipper	A clamp will grab the inverted panel and will have a follower arm that clamps the back end of the panel. The second arm is a redundant clamp on a swivel. The clamps will lift and rotate the panel. They then lower and rest the panel down and retract in preparation of the second panel.	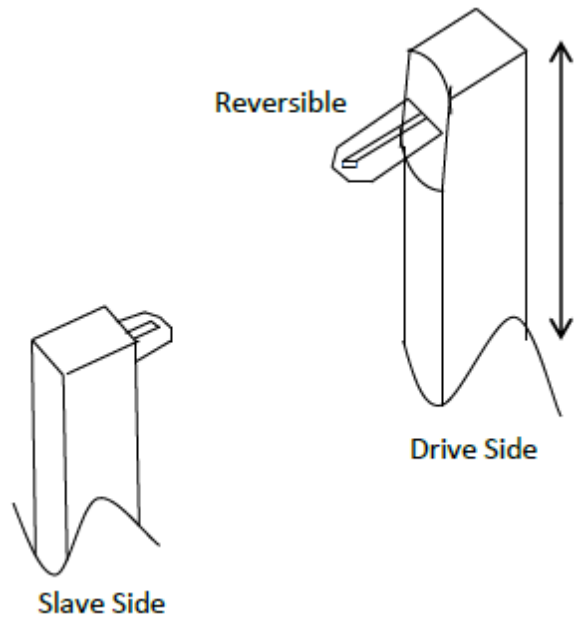
Drop Bed with Rotating Bed	The panel will come from the roll former and will be moved onto a bed that rotates. The panel will rotate and the radiator panel will drop to a lower bed. The bed will then raise and the second panel will be placed on top.	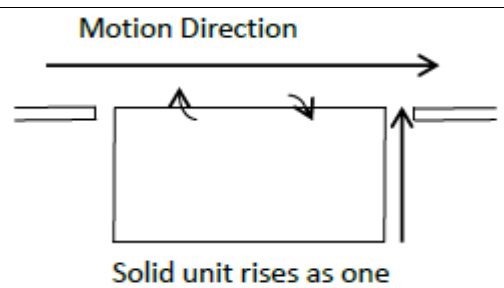

360° Roll Cage	The center portion of the machine is on a ring or gear that can rotate when a panel has entered. This panel will be grasped by an external arm which will serve to pull the panel out as well as stabilize it during the rotation process. The grasping hand is a slave and will rotate in conjunction with the cage	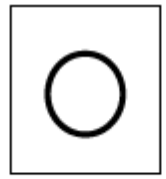 Entire machine center will rotate on ring 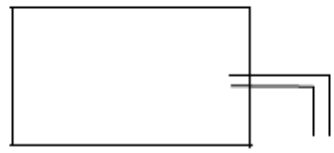 Arm is not rotating with system just clamp
Crane Method	Two clamps have the ability to move up and down and in and out. The clamps can grasp the panel from both ends and rotate the panel. The clamps can retract as the next panel is brought forward.	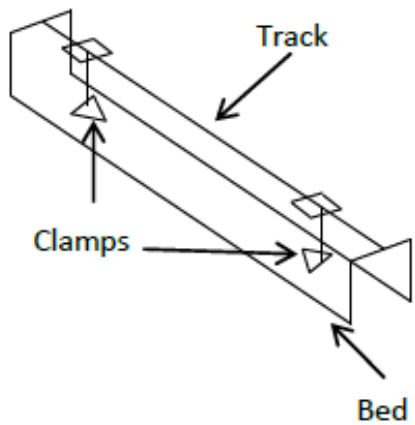
Cam Shaft	The shaft has multiple cams in various strategic locations to accommodate for the various panel sizes. The design functions by lifting the first panel while a secondary cam lifts the bottom. The panel can then drop in the correct orientation.	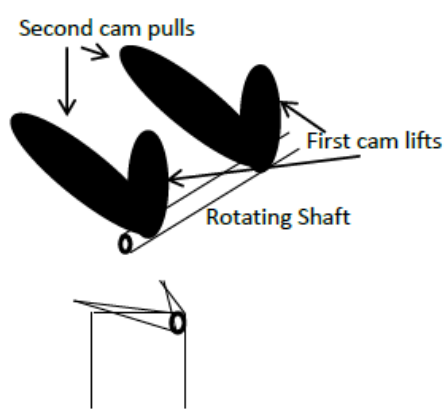

A weighted decision matrix and some internal discussion were necessary to narrow down our concepts to the top 3 choices and can be found in the following table.

TABLE C2
DECISION MATRIX TO DETERMINE TOP THREE CHOICES [21]

	Weighting	Servo Arm Flipper	Drop Bed	Roll Cage	Crane Method	Cam Shaft
Ease of Automation	**0.11**	1	3	3	1	3
Ability to Handle Different Size Panels	**0.11**	3	3	3	3	2
Reduces Human Input	**0.11**	2	3	3	3	2
Ability to Rotate Panel	**0.11**	3	3	3	3	2
Structural Integrity	**0.08**	2	3	3	2	3
Simplicity	**0.065**	1	3	1	1	3
Panel Alignment	**0.11**	3	2	3	3	1
Reliability	**0.08**	2	3	2	1	3
Panel Does not Leave Line Assembly	**0.02**	2	2	2	2	2
Ease to Index to Spot Welders	**0.065**	3	3	3	3	2
Cost	**0.04**	1	3	1	1	2
Force Required for Main Movement	**0.02**	2	3	2	2	2
Ability to Control Panel During Rotation	**0.08**	3	1	3	3	1
Sum		2.26	2.71	2.67	2.29	2.145
Rank		**4**	**1**	**2**	**3**	**5**
Continue		**NO**	**YES**	**YES**	**YES**	**NO**

It was recommended to reject the 360° Roll Cage concept due to the loss of panel control during the rotation of the beds and the requirement for another machine to grip, align and remove the panels from the roller beds. The Drop Bed concept was also not recommended, as again there would not be full control of the panel when it is dropped. The Drop Bed clamp was also determined to be very difficult to design and maintain. The Crane Method maintains full control of the panel throughout the whole rotation, alignment and indexing operations. It was recommended to continue the development of the Crane Method concept into a final design.